PHYSIOTHERAPY, REHABILITATION & OCCUPATIONAL HEALTH

PRODUCT CATALOGUE

Advanced Equipment • Innovative Technologies • Comprehensive Rehabilitation Solutions

IPEX HEALTHCARE

...all for Health and Care...

Scan to Download the Catalogue

www.ipex.co.tz

IPEX HEALTHCARE

...all for Health and Care...

YOUR RELIABLE & TRUSTED PARTNER

In Physiotherapy, Rehabilitation & Occupational Health Solutions

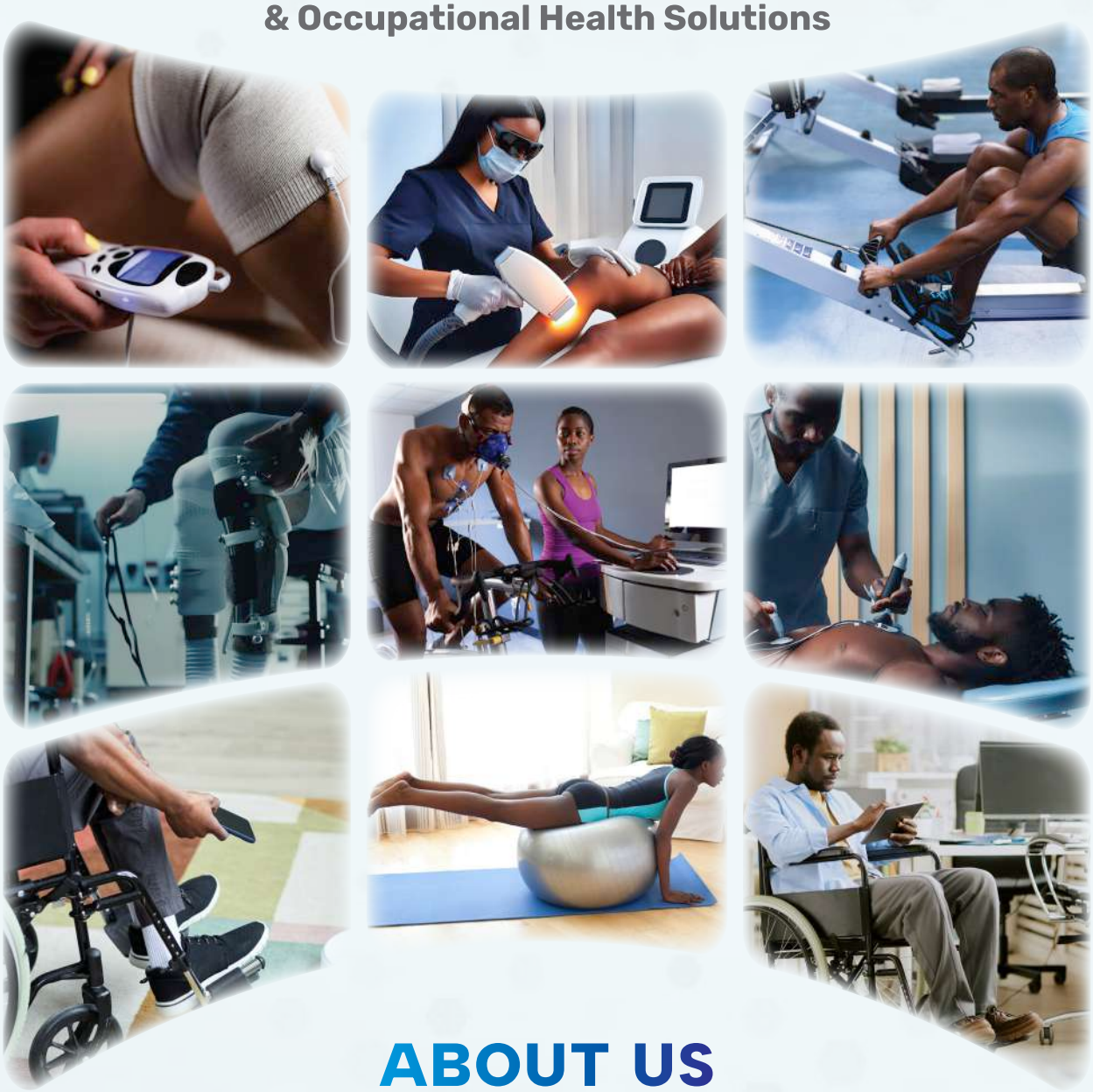

ABOUT US

IPEx Healthcare Limited is a Tanzanian based and Tanzanian registered company dealing with Importation, and Supply of Hospital consumables, Medical, Surgical and Laboratory equipment, supplies, devices and other related products and services in the medical and healthcare sector.

CONTENTS

01. Electrotherapy & Physical Modalities 05-73

02. Exercise & Strength Rehabilitation 74-161

03. Neurological Rehabilitation 162-181

04. Gait, Balance & Mobility Training 182-211

05. Rehabilitation Robotics & Advanced Systems 212-221

06. Rehabilitation Assessment & Diagnostics 222-226

07. Therapy Equipment & Furniture 227-426

08. Hydrotherapy & Thermal Therapy 427-453

09. Traction & Decompression Therapy 454-459

10. Assistive Devices & Consumables 460-467

WHY CHOOSE IPEx HEALTHCARE?

- Complete Rehabilitation Solutions
- Internationally Recognized Manufacturers
- Clinical Training & Technical Support
- Preventive Maintenance & After-sales Service
- Equipment Supply, Installation & Commissioning
- Nationwide Sales & Technical Coverage

01

Electrotherapy & Physical Modalities

LGT-2500X

Electrical Extracorporeal Shock Wave Therapy (ESWT) Device LONGEST

FEATURES

- Modern and sleek appearance design
- Sturdy metal shell, durable structure
- Integrated with vibration therapy, frequency up to 35Hz
- Control panel integrated into the shockwave handpiece
- A wide range of preset protocols with image guidance
- User-defined protocols for personalized treatment
- Automatic recognition of connected handpiece
- Patient management system with treatment history
- Record the number of shocks delivered by handpieces

HIGHLIGHTS

- Large touchscreen
- Rotary knob for quick parameters setting
- Energy range from 0.3 bar
- Automatic handpiece recognition
- Handpiece with a control panel
- Preset protocols with image guidance
- User-defined protocols
- VAS & ROM assessment system
- Patient database
- Account management to safeguard patient data

LGT-2520GP

Electromagnetic Focused Shockwave Therapy Device LONGEST

LGT – 2520GP utilizes the advanced "Electromagnetic Shockwave" technology, which generates a pressure field that converges in the adjustable focus at determined depths in specific tissues where maximal pressure is achieved.
It can accurately target the root cause of musculoskeletal conditions, effectively relieve pain, promote tissue healing, and reduce inflammation.

HIGHLIGHTS

- Electromagnetic shockwaves for accurate treatment
- Easy adjustment of shockwave energy level and frequency
- Soft, skin-friendly coupling area, closely contact focal area
- Adjustable coupling area to precisely treat the targeted spot at different depths
- An inbuilt protocol library equipped with a 3D body image helps locate the treatment site
- A patient database creates and stores individualized treatment plans and treatment histories for each patient

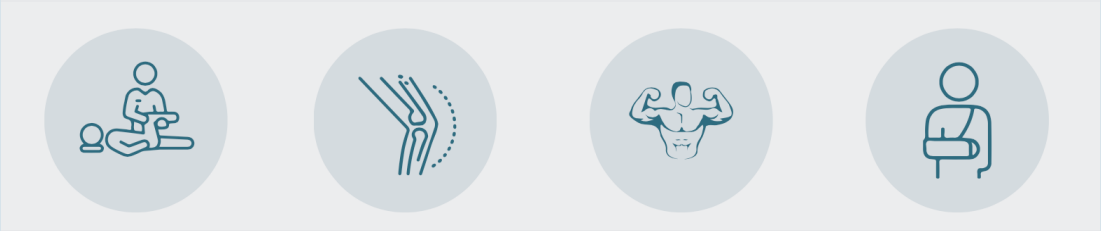

FEATURES

- Electromagnetic shockwaves for accurate treatment
- Frequency up to 20Hz
- Easy adjustment of shockwave energy level and frequency
- Soft, skin-friendly coupling area, closely contact focal area
- Adjustable coupling area to precisely treat the targeted spot at different depths

LGP-2500 SERIES

Electrical Extracorporeal Shock Wave Therapy Device LONGEST POWER SHOCKER - LGP-2500S & LGP-2500S Plus longest

LGT-2500S

- 7'' touchscreen with an intuitive interface
- User-defined protocols
- Pressure: 1.0-4.0 bar
- Frequency: 1-17 Hz
- Pulse: 1-3,000

LGT-2500S Plus

- Integrated vibration therapy
- Pressure: 1.0-5.0 bar
- Frequency: 1-22 Hz
- Pulse: 1-8,000

✪ APPLICATIONS

- Anti-cellulite treatment
- Body reshaping
- Skin elasticity improvement
- Treatment of skin irregularity after liposuction
- Connective tissue tightening
- Scar and wrinkle smoothing
- Treatment of stretch marks
- Lymphatic system stimulation

✪ TECHNICAL SPECIFICATIONS

Model Number	LGT-2500S PLUS	LGT-2500S
Image		
Channel	2 1 for Shockwave handpiece, 1 for Vibration handpiece	1
Display Screen	7" LCD Touch	7" LCD Touch
Pressure Range	1.0~5.0 Bar	1.0 4.0 Bar
Frequency	1~22Hz	1-17Hz
Vibration Handpiece:	1~35Hz	/
Pre-set Protocols	Yes	Yes
User-defined Protocol	Yes	Yes
Item Dimension (Without handpiece holders)	39.5 (L) x 39 (W) x 19.4 (H) cm	39.5 (L) x 39 (W) x 19.4 (H) cm
Item Weight (Handpiece Excluded)	11.3kg	10.5kg
Languages	10	7

LGT-3500 Series

High Frequency therapy Device LONGEST

LGT-3500 high frequency therapy device redefines non-invasive electrotherapy. Powered by advanced TECAR Therapy technology, it delivers targeted, safe, and effective treatment for pain management, tissue repair and more—tailored to meet the diverse needs of clinics and hospitals.

LGT-3500LP

LGT-3500GP

✪ LGT-3500GP & LGT-3500LP HIGHLIGHTS

- **Protocol Management**
  Picture guidance (treatment area + operation method), and customized prescription function.
- **Customizable Output**
  Adjustable intensity & duration for personalization.
- **Real-Time Monitoring**
  Temperature, resistance value, voltage value, power.
- **Smart Safety**
  Auto-identifies accessories (reduces burn risk) + over-temperature alarm+open-circuit alarm
- **Patient Record Management**
  Stores history, supports multi-account, and protects privacy.
- **Multiple Accessories**
  High-quality accessories are optional to adapt to diverse clinical needs.

LGT-2210DS and LGT-2200SP

Compression Therapy Devices LONGEST

HIGHLIGHTS

- Smart garment recognition
- Turn off chambers individually
- Large touchscreen with an intuitive user interface 29 preset compression modes
- Wide range of overlapping cuffs

LGT-2200SP

Compression Therapy Device

HIGHLIGHTS

- Portable & battery operated
- 6 compression modes
- Full-body compression experience

LGT-2320SP

Electrotherapy Stimulation Therapy Device (Portable) LONGEST

HIGHLIGHTS

- 7-inch touch screen
- 7 preset protocols with electrode placement guidance and treatment guidance
- Custom protocols for personalized treatment
- "12+1" channels for improved efficiency
- Convenient self-adhesive electrode pads of various sizes Various types of pen electrodes
- Patient database with treatment records
- Quiet operation

APPLICATIONS

- **Muscle Warm-up Aid**

The Electro Stimulation Therapy Device proves to be highly beneficial for pre-workout warm-ups.The Electro Stimulation Therapy Device sends gentle electrical impulses to muscles, enhancing blood circulation and oxygen supply to muscle tissues. This loosens and readies the muscles for intense activity and activates the neuromuscular system to improve nerve-muscle communication, muscle reactivity, and coordination.

- **Muscle Training & Strengthening**

The Electro Stimulation Therapy Device can conduct targeted training for specific muscle groups. The intensity and frequency of electrical impulses can be adjusted to suit different fitness levels and training goals, and by strengthening muscles and improving endurance, it can enhance athletic performance in various sports and activities.

- **Post-exercise Muscle Relief**

It offers significant relief for post-exercise muscle soreness. The device sends gentle electrical impulses to fatigued muscles, increasing blood flow to speed up lactic acid and waste removal. It boosts the body's recovery, reducing inflammation and muscle stiffness. Athletes and fitness lovers can use it for quicker post-exercise recovery, shortening downtime, and maintaining fitness and performance.

- **Injury Rehabilitation**

The device helps in the recovery process by stimulating the affected muscles and promoting blood circulation. It can reduce pain and inflammation, accelerate healing, and restore muscle strength and flexibility. Additionally, it aids in breaking up muscle knots and adhesions, further facilitating the return to optimal muscle function and range of motion.

LGT-2320ME

Electrotherapy Stimulation Therapy Device (Portable) LONGEST

A professional low-frequency electrical stimulation station for all stages of neuromuscular dysfunction and dysphagia.

HIGHLIGHTS

- 7-inch touch screen
- 31 preset protocols with electrode placement guidance and treatment guidance
- Custom protocols for personalized treatment
- "12+1" channels for improved efficiency
- Convenient self-adhesive electrode pads of various sizes
- Various types of pen electrodes
- Patient database with treatment records
- Quiet operation

LGT-233

Portable Electro-Stimulation Therapy Device LONGEST

HIGHLIGHTS

- Lightweight & Wearable
- User App Control "MStim Drop"
- Built-in Sensor to Monitor User Movement and Provide Real-time Feedback Certification: FDA, Health Canada

FEATURES

- **Built- in Smart Sensor**

The built- in gyroscope and acceleration sensor control the timing and duration of electrical stimulation by tracking the swing angle and pace of patient's leg.

- **Wireless Bluetooth Connection**

Quick connection easy and convenient

- **Small Unit**

The unit is small and portable, and use with straps. It can be used for a long time without any sense of heavy while walking.

- **Real- time Dynamic Observation of Walking Angle**

Observe walking angle changes every moment and record walking distance and number of steps simultaneously to facilitate quantitative motion data.

- **User- defined Programs**

Customized protocols for per patients based on their conditions

TECHNICAL SPECIFICATIONS	
Mode	Train Mode, Walk Mode
Output Waveform	Symmetrical biphasic pulse
Pulse Duration	50- 500μs
Pulse Frequency	1- 120Hz
Intensity	0- 100mA
Battery	Rechargeable Lithium Battery

LGT-231

Portable Muscle Stimulator TENS & NMES Device LONGEST

HIGHLIGHTS

- Compact and Portable
- Battery-Operated
- 2 Channels
- NMES & TENS
- Neuropathic Pain
- A Wide Range of Indications
- Preset Protocols with Pad Placement Guidance Custom Protocols
- User App Control - "MStim Reha"
- Certification: CE, FDA, Health Canada
- 2 Years of Warranty

FEATURES

- **Wireless Bluetooth connection**
  Quick connection, easy and convenient
- **User-defined Programs**
  Parameters such as frequency, pulse width, treatment time are adjustable in all treatment modes
- **Preset protocols**
  Built in parameters and schematic diagram of muscle patch

TECHNICAL SPECIFICATIONS

	CE Version	FDA Version 510(K) Number: K182020
Mode	P1/P2/P3	TENS/NMES
Pulse Duration	50- 400Qs	50- 400Qs
Pulse Frequency	2- 150Hz	1- 120Hz
Intensity	1/P2: 0- 60mA P3:0- 1000QA	0- 100mA
Time	1- 60min	1- 60min
Battery Life	More than 4 hours	More than 4 hours

MSTIM REHA LGT-231

Portable Electro-Stimulation Therapy Device Mstim Reha LGT-231 is a lightweight and portable multifunctional electrotherapy device that provides two channels of TENS, NMES current to stimulate nerves or muscles to help relieve pain and improve neuromuscular function

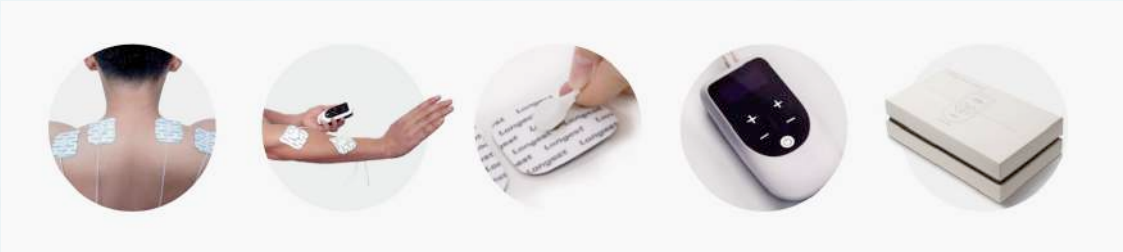

LGT-2900EUV

Combination Therapy
Electrotherapy, Ultrasound,
& Vacuum Therapy LONGEST

LGT-2900EUV

Ultrasound and Electrotherapy Device

HIGHLIGHTS

- Intuitive 10.1" full-color touchscreen interface
- Modern and sleek appearance design
- Sturdy metal shell, durable structure
- 3 treatment modalities combination
- Portable, lightweight, battery-operated ultrasound module, used individually
- Rotary knob for quick parameters setting
- Easy to move with an optional trolley
- A wide range of preset protocols
- User-defined protocols for personalized treatment Patient management system with treatment history

LGT-2900U

Ultrasound Therapy Device

✪ FEATURES

- Compact dimensions, 2.8kg battery-operated, good portability
- Built-in rechargeable battery (9000mAh)
- Intuitive 10.1'' touchscreen interface
- 42 preset ultrasound protocols with body part navigation
- User-defined protocols
- 1cm2 and 5 cm2 applicators, lightweight & ergonomic
- Patient database and account management system
- Multi-language software
- Software update via USB
- *Carrying bag
- *Trolley

LGT-2900EU

Ultrasound Electrotherapy Device

✪ FEATURES

- 2 treatment modalities: ultrasound and electrotherapy
- Ultrasound and electrotherapy combination treatment
- 4-channel electrotherapy, treat multiple people or body parts simultaneously Compact and battery-operated, great portability
- Built-in rechargeable battery (9000mAh)
- Intuitive 10.1'' touchscreen interface
- 42 preset protocols for ultrasound , 57 for electrotherapy
- User-defined protocols
- 1cm2 and 5 cm2 applicators, comfortable and easy to handle
- A wide range of advanced current waveforms available
- Self-adhesive electrodes & silicon rubber electrodes of various sizes
- Patient database and account management system
- Software update via USB
- *Carrying bag
- *Trolley

LGT-2900EUV

Ultrasound Electrotherapy Device with Vacuum Unit

✪ FEATURES

- 3 treatment modalities: ultrasound, electrotherapy, and vacuum therapy
- Multiple channels, treat multiple people or body parts simultaneously
- Ultrasound and electrotherapy/vacuum therapy combination treatment
- Compact and battery-operated, great portability
- Built-in rechargeable battery (9000mAh)
- Intuitive 10.1'' touchscreen interface
- 42 preset protocols for ultrasound , 57 for electrotherapy, 25 for combination User-defined protocols
- 1cm2 and 5 cm2 applicators, comfortable and easy to handle
- A wide range of advanced current waveforms available
- Self-adhesive electrodes & silicon rubber electrodes of various sizes
- High-quality suction cups (vacuum electrodes) of various sizes
- Patient database and account management system
- Software update via USB
- *Carrying bag
- *Trolley

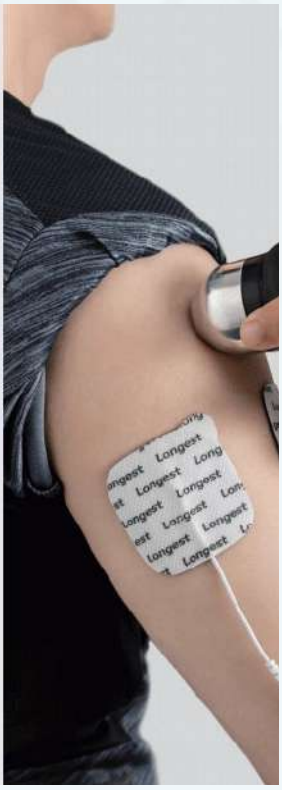

TECHNICAL SPECIFICATIONS

Model		LGT-2900U	LGT-2900EU	LGT-2900EUV
Ultrasound	Channel	2-channel		
	Acoustic Working Frequency	1 MHz and 3 MHz		
	Waveform	Continuous wave, pulsed wave		
	Pulse Frequency	16 Hz, 48 Hz and 100 Hz		
	Intensity	**In Continuous mode:** ▪ 0-2 W/cm² (1 cm² Applicator) ▪ 0-2.5 W/cm² (5 cm² Applicator) **In Pulsed mode:** ▪ 0-3 W/cm² (1 cm² Applicator) ▪ 0-5 W/cm² (5 cm² Applicator)		
	Treatment Time	1-30 minutes		
Electrotherapy	Channel	——	4-channel	
	Output Mode	——	Constant Current (CC) or Constant Voltage (CV)	
	Treatment Time	——	1-60 minutes	
Vacuum Therapy	Channel	——	——	4-channel
	Pressure Range	——	——	10-40 kPa
	Vacuum Mode	——	——	15 times per min/ continuous
Dimensions		379× 310× 146 mm	379× 310× 211 mm	379× 310× 261 mm
Weight		2.8kg	4.1kg	5.6 kg
Interface		10.1" touch screen		
Power Supply		Battery: 11.1V, 9000mAh, lithium AC 100-240V, 50/60 Hz		

LGT-2410S

Cryotherapy Device LONGEST

HIGHLIGHTS

- 10.1-inch full-color LCD touchscreen
- Therapeutic encyclopedia with image guidance
- Real-time detection of skin temperature
- Hypothermia pop-up with automatic stop and light cues
- NRS function to track the treatment progress
- Integrated trolley for better mobility

TECHNICAL SPECIFICATIONS

Interface	10.1" color touchscreen
Treatment Duration	1s-10min
Dimensions	40(L) x 48(W) x 125(H)cm
Weight (without cylinder)	29kg
Gas Cylinder Capacity	6/8/10L
Applicator	● Screw thread G5/8 ● Monitoring screen ● Temperature sensor ● LED light ● Anti-frosting nozzle
Gas Cylinder Requirement	● External Diameter < 175mm ● Height < 870mm ● with a Rising Tube/Siphon ● Food-grade CO_2
Functions	● Real-time skin temperature monitoring ● Treatment image guidance ● Operation guidance ● Automatic shut off ● Patient database ● Data export via USB ● Treated area positioning ● NRS function ● Cylinder capacity monitoring
Temperature	0 ℃-15 ℃
Temperature Detection	-3 ℃-40 ℃
Power Supply	AC100-240V, 50/60Hz

LGT-2360S

Electrostatic Oscillation Therapy LONGEST PowerOsci

HIGHLIGHTS

- Handheld and rechargeable
- Preset protocols
- Easy to learn, easy to use
- Low maintenance
- Suitable for both healthcare professionals and individuals
- FDA-cleared

TECHNICAL SPECIFICATION

Discover how you can stand out from the crowd in electrostatic oscillation therapy with PowerOsci LGT-2360S

Carrying Bag
convenient to take when going out

2.8" Multiple Color Display
for stunning visuals and better readability

10cm Applicator
to treat larger areas easily, improving efficiency

5.5cm Applicator
with easy-to-replace head for hygiene and patient safety

Applicator Handle
ergonomic design, comfortable to hold, agile to operate

Device Stand
to top the device on for easy charging and storage

Electrode Pads
adhesive, easy to remove, no residue

Size: 76.5 x 143.5 x 35.5mm
Weight: 230g
Output Frequency: 5-300 Hz
Output Voltage: Max 450V
Rechargeable Battery: 2600mA, Last for 6h, Recharged in Less than 3h
Quality Assurance: FDA approved; 2-year warranty

LGT-2202DVT

VTE Prevention Pump LONGEST

LGT-2202DVT is a state-of-the-art medical device designed to provide highly effective and targeted compression therapy for DVT patients. The device is remarkably compact in dimensions and easy to operate, highly suitable for hospitals to simplify workflow and enhance patient outcomes.

HIGHLIGHTS

- Portable & Lightweight Battery-operated
- Quiet operation
- Automatic garment recognition
- Alternate and synchronous inflation
- One leg compression supported
- Vascular refill detection, safe and smart compression cycles
- Real-time pressure monitoring
- Various kinds of sleeves (single-patient use)

SPECIFICATION

Chambers	1-3
Mode	4
Time Range	Continuous
Pressure Range	30 - 130mmHg
Interface	2.8" LCD screen
Rechargeable Battery	Yes (Lithium battery: 3,500mAh)
Weight	1.5kg
Dimension	145(L) x 166(W) x 188(H)mm
Single-leg Treatment	Supportive
Sleeve Auto-Detection	Supportive
Vascular Refill Detection	Supportive

FEATURES

- Compact dimensions and lightweight Battery-operated
- Quiet operation
- Automated garment recognition Intuitive user interface
- Alternate and synchronous inflation Single leg treatment supported
- Blood velocity detection, safe and smart compression cycles
- Real-time pressure monitoring
- Gradient compression
- High-quality connector, easy to connect and disconnect
- Complete range of garments, made of high quality and breathable fabrics

One-Button-Start System

Automatically setting the proper pressure and compression cycle, reducing additional user intervention.

Smart Sleeves Recognition

Auto-Recognize the using sleeves belonging to Longest DVT sleeves family.

Compatible Bedrail Hanger

Lightweight, battery-operated. Increase the general mobility and enabling medical staff to move it between patients from different bed types.

Quick and Safe Connection

Equipped with a convenient connector to ensure the tightness of the sleeve connection.

Noiseless Operation

Ensure a quiet environment (below 42dB) for patients' rest.

Vascular Refill Detection

Detect each patient's vascular refill status to deliver a customized compression therapy plan.

BENEFITS OF THE TREATMENT

- VTE Prevention
- Circulation Enhancement
- Acute and Chronic Edema Reduction
- Venous Stasis Treatment
- Improve the Healing Speed of Leg Ulcers
- Venous Insufficiency Prevention and Treatment

LGT-2201DVT & LGT-2200DVT

VTE Prevention Pump – Compression Therapy Device LONGEST

FEATURES

- 4 Compression Modes
- 5" Touch Screen
- Reusable & Disposable Sleeves
- Gradient Pressure Setting
- Intermittent Pneumatic Compression >
- Pressure of Every Chamber Adjustable
- Rechargeable Battery Powered by AC or DC

TECHNICAL SPECIFICATIONS	
Chambers	3
Compression Mode	4
Time Range	1min-24hours or continuous
Pressure Range	40-150mmHg
Hold Time	0-10s(Step by 1s)
Interval Time	10-60s(Step by 1s)
Rechargeable Battery	Yes (Lithium battery : 11.1V 9000mAh) Maximum Running Time: No Less than 8 Hours
Adaper	Yes
Input Voltage	AC100-240V 50-60Hz
Noise Level	<50 dB
Dimension	250(L)x184(W)x150(H)mm
Weight	2.5kg

LGT-2200DVT

Compression Therapy Device

- Rechargeable battery (9000mAh)
- 4 compression modes
- Wide pressure range: 40-150 mmHg
- Screen lock to prevent mistaken touching

LGT-2201DVT

Compression Therapy Device

- Easy button controls
- Rechargeable battery (3500mAh)
- 4 compression modes
- Wide Pressure Range: 30-150 mmHg

VTE

VTE preventive sleeve LONGEST

Order No.	Sleeve	Size	Proximal Circumference
220092	Thigh Length Sleeve	S	<54.9 cm
220092M		M	<69.5 cm
220092L		L	<97.3 cm
220093M	Calf and Foot Sleeve	M	<57.0 cm
220093L		L	<72.9 cm
220094	Calf Sleeve	S	<61.0 cm
220094M		M	<71.0 cm
220094L		L	<80.1 cm
220095	Foot Sleeve	S	< 45.2cm
220095M		M	< 55.6cm
220095L		L	<69.3cm
220098M		M	<38.4 cm

Order No.	Sleeve	Size	Proximal Circumference
220292	Thigh Length Sleeve	S	<54.9 cm
220292M		M	<69.5 cm
220292L		L	<97.3 cm
220293	Calf and Foot Sleeve	S	<54.0 cm
220293M		M	<57.0 cm
220293L		L	<72.9 cm
220294	Calf Sleeve	S	<61.0 cm
220294M		M	<71.0 cm
220294L		L	<80.1 cm
220298M	Foot Sleeve	M	<38.4 cm

LGT-2660 Series

Electromagnetic Stimulator – Musculoskeletal Pain

LGT-2660 Series Electromagnetic Stimulator for Musculoskeletal Pain is an advanced rehabilitation device engineered to address a wide range of musculoskeletal pain conditions and associated dysfunctions. Operating on the principle of electromagnetic induction, It generates a magnetic field and inductive currents to regulate neuromuscular function while delivering deeply penetrating energy—this energy tran- scends superficial tissues to act directly on muscles, joints, and bones. For both acute and chronic musculoskeletal pain, it provides a safe, efficient, and medication-free new solution.

✪ APPLICATIONS AREAS

Musculoskeletal & Neurological Rehabilitation

- Hospitals (Orthopedics, Rehab, Pain Management)
- Clinics

Sports Rehabilitation

- PT Centers
- Rehab Centers
- Sports Medicine Facilities

Geriatric Rehabilitation

- Hospitals
- Clinics
- Rehab Centers
- Nursing Homes

LGT-2660AP

Electromagnetic Stimulator (Single-channel)

LGT-2660BP

Electromagnetic Stimulator (Dual-channel)

✪ OPTIONAL MODELS

- 15.6-inch full-color touch screen with a knob for quick parameter adjustment
- Equipped with a universal stand for multi-angle adjustment, adapting to diverse patient requirements
- Picture guidance to assist in locating stimulation areas
- Adjustable treatment parameters to meet different therapeutic needs
- Preset and custom prescription functions for flexible therapy adaptation
- Supports binding patient information and saving treatment data
- Equipped with a trolley for easy mobility

LGT-2640AP

Electromagnetic Stimulator LONGEST – Pelvic Floor and Urinary System Disorder

LGT-2640AP Magnetic Stimulator specializes in treating pelvic floor and urinary system disorders. Its non-invasive magnetic fields target pelvic muscles and nerves, accelerating symptom relief and recovery.

✪ FEATURES

Indications for Women

Primary Causes
- Pregnancy, Childbirth, Aging

Key Conditions
- Stress Urinary Incontinence (SUI)
- Urgency Urinary Incontinence Overactive Bladder (OAB)
- Pelvic Organ Prolapse (POP)

Indications for Men

Primary Causes
- Prostate Disease, Surgical Injury, Aging

Key Conditions
- Stress Urinary Incontinence (Postoperative)
- Chronic Prostatitis Chronic Pelvic Pain Syndrome (CP/CPPS)
- Erectile Dysfunction (ED) – Adjuvant Therapy

LGT-2410S

Cryotherapy Device LONGEST

Freeze the Pain Away! The cryotherapy device LGT-2410S uses advanced localized cryotherapy technology, offering unmatched precision, efficacy, safety, and ease of use. The device combines the effects of cold and pressure.

HIGHLIGHTS

- 10.1-inch full-color LCD touchscreen
- Therapeutic encyclopedia with image guidance
- Real-time detection of skin temperature
- Hypothermia pop-up with automatic stop and light cues
- NRS function to track the treatment progress
- Integrated trolley for better mobility

TECHNICAL SPECIFICATIONS	
Interface	10.1'' color touchscreen
Treatment Duration	1s-10min
Dimensions	40(L) x 48(W) x 125(H)cm
Weight (without cylinder)	29kg
Gas Cylinder Capacity	6/8/10L
Applicator	▪ Screw thread G5/8 ▪ Monitoring screen ▪ Temperature sensor ▪ LED light ▪ Anti-frosting nozzle
Gas Cylinder Requirement	▪ External Diameter<175mm ▪ Height<870mm ▪ with a Rising Tube/Siphon ▪ Food-grade CO2
Functions	▪ Real-time skin temperature monitoring ▪ Treatment image guidance ▪ Operation guidance ▪ Automatic shut off ▪ Patient database ▪ Data export via USB ▪ Treated area positioning NRS function ▪ Cylinder capacity monitoring
Temperature	0 ºC-15 ºC
Temperature Detection	-3 ºC-40 ºC
Power Supply	AC100-240V, 50/60Hz

LGT-2320SP

Electrotherapy Stimulation Therapy Device (Portable) LONGEST

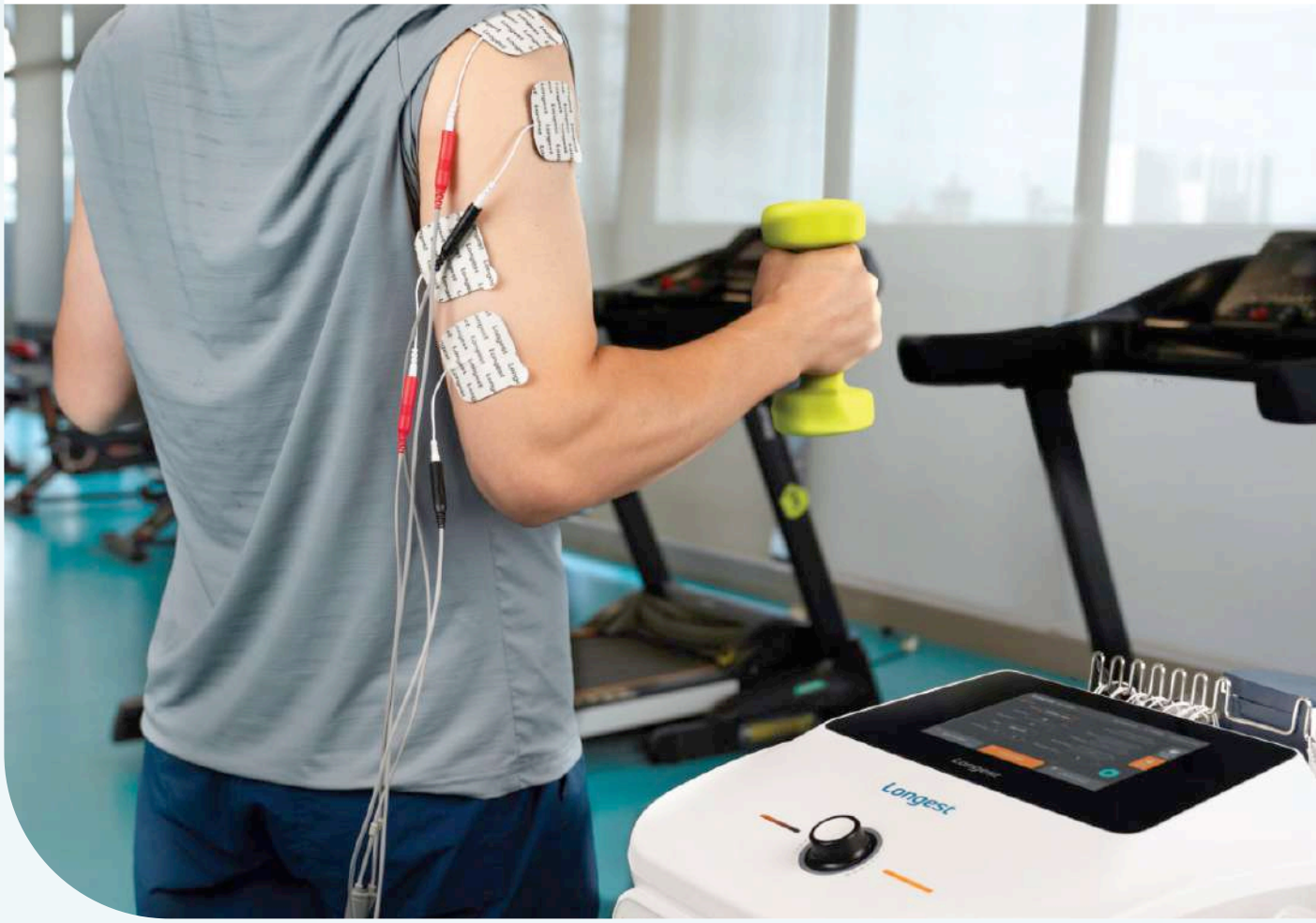

HIGHLIGHTS

- 7-inch touch screen
- 7 preset protocols with electrode placement guidance and treatment guidance
- Custom protocols for personalized treatment
- "12+1" channels for improved efficiency
- Convenient self-adhesive electrode pads of various sizes
- Various types of pen electrodes
- Patient database with treatment records
- Quiet operation

- 7" Full-color Touch Screen
- Lightweight and Portable
- New UI Design with Easy User Interaction
- Rotary Knob for Quick Adjustment
- Image Guidance of Electrode Placement
- 13 Channels for Multisite Treatment
- Quiet During Operation
- Pen Electrode as a Standard Configuration
- An Emergency Switch for Treatment Safety

LGT-2320ME

Electrotherapy Stimulation Therapy Device (Portable) LONGEST

A professional low-frequency electrical stimulation station for all stages of neuromuscular dysfunction and dysphagia.

HIGHLIGHTS

- 7-inch touch screen
- 31 preset protocols with electrode placement guidance and treatment guidance Custom protocols for personalized treatment
- "12+1" channels for improved efficiency
- Convenient self-adhesive electrode pads of various sizes
- Various types of pen electrodes
- Patient database with treatment records
- Quiet operation

FEATURES

Intuitive 15.6" color touchscreen
24 preset protocols with anatomical diagrams
Ergonomic seat featuring a built-in coil and easy installation
Auto-save for case data & treatment parameters
Instant settings with Rotary Knob
Emergency stop button for safety
Longest
Longest

LGT-2520GP

Electromagnetic Focused Shockwave Therapy Device
LONGEST

LGT-2520GP utilizes the advanced "Electromagnetic Shockwave" technology, which generates a pressure field that converges in the adjustable focus at determined depths in specific tissues where maximal pressure is achieved.
It can accurately target the root cause of musculoskeletal conditions, effectively relieve pain, promote tissue healing, and reduce inflammation.

HIGHLIGHTS

- Electromagnetic shockwaves for accurate treatment
- Easy adjustment of shockwave energy level and frequency
- Soft, skin-friendly coupling area, closely contact focal area
- Adjustable coupling area to precisely treat the targeted spot at different depths
- An inbuilt protocol library equipped with a 3D body image helps locate the treatment site
- A patient database creates and stores individualized treatment plans and treatment histories for each patient

FEATURES

- Electromagnetic shockwaves for accurate treatment
- Frequency up to 20Hz
- Easy adjustment of shockwave energy level and frequency
- Soft, skin-friendly coupling area, closely contact focal area
- Adjustable coupling area to precisely treat the targeted spot at different depths

LGP-2500 SERIES

Electrical Extracorporeal Shock Wave Therapy Device LONGEST POWER SHOCKER - LGP-2500S & LGP-2500S Plus

PowerShocker LGT-2500S

Electrical Extracorporeal ShockWave Therapy Device

HIGHLIGHTS

- 7'' touchscreen with an intuitive interface
- User-defined protocols
- Pressure: 1.0-4.0 bar
- Frequency: 1-17 Hz
- Pulse: 1-3,000

PowerShocker LGT-2500S Plus

Electrical Extracorporeal ShockWave Therapy Device

✪ HIGHLIGHTS

- Integrated vibration therapy
- Pressure: 1.0-5.0 bar
- Frequency: 1-22 Hz
- Pulse: 1-8,000

TECHNICAL SPECIFICATIONS		
Model Number	LGT-2500S PLUS	LGT-2500S
Image		
Channel	2 1 for Shockwave handpiece, 1 for Vibration handpiece	1
Display Screen	7" LCD Touch	7" LCD Touch
Pressure Range	1.0~5.0 Bar	1.0 – 4.0 Bar
Frequency	1~22Hz	1 – 17Hz
Vibration Handpiece:	1~35Hz	/
Pre-set Protocols	Yes	Yes
User-defined Protocol	Yes	Yes
Item Dimension (without handpiece holders)	39.5 (L) x 39 (W) x 19.4 (H) cm	39.5 (L) x 39 (W) x 19.4 (H) cm
Item Weight (Handpiece Excluded)	11.3 kg	10.5 kg
Langages	10	7

PowerWave LGT-2500S

The ideal body shaping treatment
Acoustic waves provide an ideal body shaping treatment option

TECHNICAL SPECIFICATIONS
Pressure Range: 1.0-4.0 Bar (Step by 0.1 Bar)
Frequency: 1~17Hz
Pre-set Protocol: Yes
Circumference: Yes
Dimension: 39.5 (L) x 39 (W) x 19.4 (H) cm
Standard Weight: 11.3kg
Langages: English, Italian, German, Spanish, French

LGT-3500 Series

High Frequency therapy Device

LGT-3500 high frequency therapy device redefines non-invasive electrotherapy. Powered by advanced TECAR Therapy technology, it delivers targeted, safe, and effective treatment for pain management, tissue repair and more—tailored to meet the diverse needs of clinics and hospitals.

LGT-3500LP

Upright Design

LGT-3500GP

Desktop Design

DUKON ELECTROTHERAPY CONT..

Based on neurophysiology,magnetobiology, biophysics, and clinical brain disease treatment, a special treatment device outputs specific regular transcranial magnetic stimulation. The physiological effects of transcranial magnetic stimulation on brain tissue are mainly manifested in the following aspects:

- Increase the elasticity of cerebral blood vessels.
- Improve blood circulation in the lesion area. mprove the metabolic environment of brain tissue.
- Guide the patient's brain magnetic function towards normalization and orderliness

MAIN TECHNICAL PARAMETERS			
rTMS Intensity	Magnetic Field Frequency	Erebellar fastigial nucleus stimulation Maximum Output Current	Limb electrical stimulation
III LEVEL 3-18mT	50Hz±1Hz	< 20mA	60mA±30%

PC version for double use

Touch screen for single use/dual channels

Touch screen for single use (Optional trolley)

Home version

DUKON ELECTROTHERAPY

REPETITIVE TRANSCRANIAL MAGNETIC STIMULATOR

The repetitive transcranial magnetic stimulator uses the principle of electromagnetic induction to discharge rapidly from the energy storage capacitor to the stimulation coil. The magnetic field generated by the coil current induces the biological current in the biological tissue of the stimulation site through the skull or other tissues, which can stimulate the brain or peripheral nerves harmlessly and painlessly, causing the excited activity of nerve cells. It can be used not only for the diagnosis of nerve function, but also for the intervention and treatment of nerve function regulation. It is a non-invasive and accurate brain science and neuroregulation technology.

8-Shaped coil
(Standard)

0-Shaped coil
(Standard)

Therapy cap
(Optional)

MAIN TECHNICAL PARAMETERS				
Magnetic Induction Intensity	Output Frequency	Pulse Width	Output Time	Low Magnetic Intensity (Optional)
0-2T(±20%) divided into 100 levels	0-30Hz(±10%) in steps of 1Hz	350μs (±10%)	0-120mins	3-18mT (±10%)

PRODUCT ADVANTAGES

- Integrated computer touch screen with an intelligent and simple human-machine interface for convenient operation
- Consistent stimulation output(intensity, amplitude, etc.) without decay during continuous stimulation to ensure stable and reliable stimulation quality
- Multiple temperature monitoring,unique cold processing system, intelligent liquid cooling, and dual air cooling functions for safe and long-duration continuous operation. Ensures patient safety
- Pure waveform, free from harmonics and interference, resulting in higher treatment precision
- Fuselage design emergency stop button, users can stop treatment at any time during use

DUCON

SWALLOWING NEUROMUSCULAR ELECTRICAL STIMULATOR

Swallowing neuromuscular electrical stimulation devices are used for the treatment and training of swallowing dysfunction. They output specific low-frequency pulse currents to electrically stimulate the nerves and muscles in the laryngeal and neck area, exciting the nerves and swallowing muscle groups, promoting the recovery of damaged nerves, strengthening the movement of the swallowing muscles, alleviating neuronal paralysis, and promoting the reconstruction and restoration of the swallowing reflex arc function, thereby improving swallowing and language abilities.

✪ MORE MODELS

Dual Channel Computer Version
(Includes hand controller)

Dual Channel Touch Screen Version
(Includes hand controller)

Single Channel Touch Screen Version
(Includes hand controller)

Single Channel Desktop Version
(Includes hand controller)

Home Portable
(optional hand controller)

LOWER LIMB FUNCTIONAL ELECTRICAL STIMULATOR

Lower limb functional electrical stimulatior use electrical stimulation to mimic the central nervous system, controlling targeted nerves and muscles. These devices are worn by patients, and their built-in motion sensors detect the patient's gait, assisting them in completing walking actions such as knee flexion, foot lifting, stepping, and landing.
The devices can increase joint mobility,alleviate lower limb spasticity, improve gait, and reduce the risk of falls.

✪ PRODUCT ADVANTAGES

- It integrates passive electrical stimulation, electromyographic feedback stimulation, and multimedia biofeedback training
- Three-dimensional gait analysis training provides real-time, intuitive feedback of rehabilitation indicators to patients, which is highly effective in improving gait

Main unit

Foot sole transmitter

Remote control

ELECTRICAL DIAPHRAGM PACEMAKER DUKON

LOW-FREQUENCY EXTERNAL DIAPHRAGM PACEMAKER

By using Skin electrodes to apply low-frequency pulsed electrical stimulation to the phrenic nerve, the diaphragm contracts and relaxes rhythmically, increasing diaphragmatic excursion, thereby increasing ventilation, promoting the expulsion of CO2 from lungs, and gradually restoring the patient's diaphragmatic function. It's an important equipment for critical care rehabilitation and cardiopulmonary.

Electrode lead wires

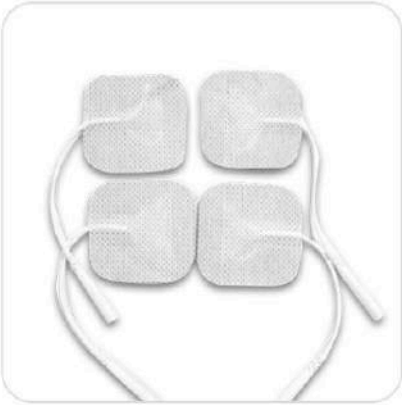

Electrode pads

MAIN TECHNICAL PARAMETERS			
Pulse Repetition Frequency	Pacing Times	Treatment Time	Output Amplitude
30Hz, 35Hz, 40Hz, 45Hz, 50Hz	Adjustable from 5 to15	Adjustable from 5 to 90minutes	6mA (adjustable in 60 levels)

ELECTRICAL STIMULATOR DUKON

MEDICATED PERMEATION THERAPY DEVICE

Medicated permeation therapy device is a medical equipment that integrates the wisdom of traditional Chinese medicine and the essence of modern science and technology. Combining medium frequency electrotherapy and drug penetration technology, it realizes the synergistic effect of medicine and physical therapy. The modulated wave is sent to the human body with the strong penetrating power of the carrier if current to achieve the effect of deep treatment, and the drug can penetrate into the lesion site more quickly by using the pushing or heating effect of the IF current to achieve accurate and efficient treatment. The equipment is easy to operate, safe and non-invasive.

Single channel

Dual channel

✪ PRODUCT ADVANTAGES

The product is composed of three parts:medium frequency electrotherapy, warm electrode and three-dimensional dynamic interferometer, which can realize multiple functions such as medium frequency physiotherapy, medium frequency drug introduction, interferometer drug introduction and interferometer electric physiotherapy. It is effective in relieving inflammation and analgesia, improving blood circulation, promoting the regression of inflammation and edema, accelerating fracture healing, preventing and delaying muscle atrophy.

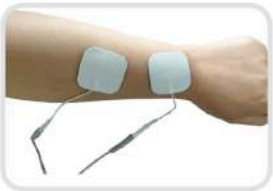

ELECTRICAL STIMULATOR DUKON

INTERFERENTIAL CURRENT THERAPY DEVICE

The device is three different frequency equal amplitude alternating current cross input human body at the same time, produce a constantly changing interference current; Can stimulate the body from multiple angles and directions;
Thus, the dynamic stimulation effect of multiple parts, different directions, angles and shapes can be obtained.The three dimensional interference electric field was generated in the body during treatment, and the analgesic and analgesic effects were obvious.

✪ PRODUCT ADVANTAGES

- There are a variety of different frequencies and waveforms of current, can be flexibly selected according to the patient's condition, the patient is not easy to produce tolerance
- With fault alarm and other functions, the operation is simple and safe

Single screen Single channel

Two-screen Two-channel

Portable Single channel

FUMIGATION THERAPY DUKON

Fumigation therapy is one of the commonly used external treatment methods in traditional Chinese medicine and is an important part of Chinese medical science. The fumigation therapy device mainly achieves therapeutic purposes through the dual effects of physical warmth and absorption of traditional Chinese medicinal herbs.By using heat to apply the medicine to the steamed area, it can expand local blood vessels, promote blood circulation, warm and unblock the meridians, detoxify and kill bacteria, relieve itching, reduce swelling and pain, and ultimately achieve the goals of treating diseases, preventing diseases, health care, and beautification.

✪ PRODUCT ADVANTAGES

- Real-time temperature control design, effectively prevent skin burns
- Universal arm design, fumigation Angle 360° adjustable, convenient and flexible
- Anti-condensation water dripping design to avoid skin discomfort

Available in single channel and dual channel specifications

CHEST VIBRATOR DUKON

CONSTANT TEMPERATURE WAX THERAPY DEVICE

- Automatic control, melting wax, washing wax, filtration, automatic wax and wax cake production, no need to manually connect wax or scoop wax.
- The combination of ultraviolet light and high temperature disinfection can effectively kill the bacteria on the surface and inside of the paraffin to prevent cross infection and ensure safer use.
- Paraffin cleaning: can wash the reused paraffin for separation, automatic disinfection, cleaning, precipitation, multistage filtration, to ensure that the paraffin is clean and health can be reused for a longer time, and completely solve the problem of paraffin cleaning in the traditional wax therapy machine.
- Special air duct circulation system design of wax cake box ensures that the temperature difference at each point of wax cake box is not more than±0.5ºC when the wax cake box is fully loaded, to ensure the coexistence of no sandwich and no wax liquid inside wax cake, to ensure the softness, adhesion and plasticity of wax cake, and to ensure safe and effective use.
- 10"super large screen display interface, independent touch algorithm design, clearer display, more smooth operation.
- The automatic model has 12/18 discs to choose from, with a single disc waxing system, and the wax cake thickness can be adjusted at three levels.

WET HOT COMPRESS THERAPY DEVICE

Wet hot compress therapy device is the first domestic use of glass fiber and pure materials, through high-quality cotton and linen canvas packaging, heating in the water tank and absorb a lot of heat and water, the treatment of slow heat dissipation and emit water vapor, the treatment site play a role in wet hot compress. The hot bag can be used repeatedly until the material fails. The device is simple to operate, and the treatment site without "pollution" and unclean feeling, with pure natural non-toxic side effects, ultra-long heat preservation, repeated durability and other characteristics, is an economical and practical new thermal therapy product.

MULTI-FREQUENCY VIBRATION SPUTUM DISPENSER

According to the principle of clinical chest physical therapy, the multi-frequency vibration expectorator produces a therapeutic force with a specific direction of periodic changes on the surface of the patient's body, specifically for patients with lung ventilation disorders. Simulating the artificial back tapping, there are percussion, tremor and pushing mode of work, fully realize the purpose of drainage for patients and postures.

LASER THERAPY HAOBRO

✪ PRODUCT PRINCIPLE

Magnetic therapy: Strong magnetic fields can adjust the biological magnetic field of the body, generate induced microcurrents, change the permeability of cell membranes, change the activity of certain enzymes, expand blood vessels, and accelerate blood flow, thereby achieving auxiliary therapeutic effects such as pain relief and swelling.

Laser: It is mainly used to produce photothermal, photochemical and biological stimulation effects with human tissues to achieve the purpose of treatment or auxiliary treatment. After biological tissue absorbs the energy of low energy laser, its energy state changes, accompanied by few thermal effect and photochemical effect to stimulate the tissue. By improving blood circulation and promoting the dissipation and absorption of inflammation, it is beneficial to tissue regeneration and accelerates wound healing.

✪ FEATURES

1. **Extra large touch screen**
   One-button shuttle design makes operation easy and convenient
2. **3 working modes**
   Single trigger, continuous mode, automatic mode
3. **6 Tesla high intensity magnetic field**
   Strong penetration and deep treatment depth
4. **Non-invasive treatment**
   Painless, non-invasive, good experience
5. **Using 3 laser sources**
   655nm wavelength low energy laser
6. **Liquid cooling system**
   Long working time and uninterrupted treatment
7. **Built-in commonly used clinical treatment prescription**
   Also supports customized treatment prescription
8. **Multiple protection**

TECHNICAL SPECIFICATIONS

BC-MT01	BC-MT02	BC-MT03	BC-MT04	BC-MT05
Cart-based type	Cart-based type	Cart-based type	Cart-based type	Cart-based type
Single channel	Dual channel	Single channel	Dual channel	Dual channel
Treatment head 1	Treatment head 1 +treatment head 2/3	Treatment head 1	Treatment head 1 +treatment head 2/3	Treatment head 3
/	/	1 workstation	1 workstation	1 workstation

OSTEOPOROSIS – HAOBRO

✪ PRODUCT PRINCIPLE

When a specific low-frequency pulsed magnetic field acts on the human body, it will produce a magnetoelectric effect. After acting on the bone cells, it improves the metabolism and reconstruction of the bone, promotes the activity of the osteoblast, and delays the loss of bone mass. At the same time, magnetic field analgesia can relieve pain caused by osteoporosis.

✪ FEATURES

1. Double ring magnetic therapy device
2. Planar magnetic therapy device (7-section crawler type)
3. Carbon fiber infrared heating device
4. Narrow gap design, beautiful and low failure rate
5. The treatment ring is driven and positioned by a precision screw
6. Six treatment modes

TECHNICAL SPECIFICATIONS	
HB320 Double ring stereo type	HB330 Double ring stereo type
1 double ring stereo treatment bed	2 double ring stereo treatment beds
Bed surface heating device	Bed surface heating device

BONE THERAPY - HAOBRO

✪ PRODUCT PRINCIPLE

The electric current is introduced into the human body to stimulate the growth of bone cells; the pulsed magnetic field acts on bones, muscles, soft tissues, etc. to produce a series of magnetic biological effects; and through the electrostatic field, the piezoelectric effect of the bone is formed, which promotes the deposition of calcium salts and accelerates calcification, so as to treat bone tissue damage.

✪ FEATURES

1. Comprehensive treatment of various physical factors, magnetic therapy, low-frequency electrotherapy, electrostatic therapy
2. Magnetic field strength up to 50mT
3. Paramagnetic, focusing and other magnetic therapy modes
4. Multiple channels can be used at the same time
5. The magnetic coupling disc can be adjusted arbitrarily, which can meet the treatment needs of various parts

TECHNICAL SPECIFICATIONS	
DHG-I	DHG-III
Cart-based	Cart-based
Touch screen	Touch screen
One-key shuttle	One-key shuttle
2 channels (magnetic therapy)	1 channel (magnetic therapy)
4 channels (low frequency electrotherapy)	2 channels (low frequency electrotherapy)
2 channels (electrostatic therapy)	/

HAOBRO ULTRASONIC DEVICE

✪ FEATURES

1. 8-inch LCD screen design, real-time display of various treatment data
2. One-key shuttle button for easy operation
3. One-key switch between pulse and continuous mode, and the treatment intensity can be adjusted in 10 levels
4. Four channels can be used at the same time
5. Combination of fixed treatment head and mobile treatment head

TECHNICAL SPECIFICATIONS			
HB810A	HB810B	HB810D	HB820D
Single channel	Dual channel	Dual channel	4-channel
Portable	Portable	Cart-based	Cart-based
/	One 1MHz fixed treatment head	One 1MHz fixed treatment head	Two 1MHz fixed treatment heads
One 1MHz mobile treatment head	One 3MHz mobile treatment head	One 3MHz mobile treatment head	A 1MHz and a 3MHz mobile treatment head respectively

ULTRASONIC PHYSIO THERAPY DEVICE

✪ FEATURES

1. Color touch screen+knob operation
2. Multiple ultrasound treatment heads available for selection
3. Ultrasonic treatment head with over-temperature protection function
4. Built in multiple clinical treatment plans
5. Meeting different clinical needs
6. Two ultrasonic operating frequencies
   1MHz, 3MHz dual frequency output, single treatment head can realize dual frequency free switching
7. Customized parameter collection function
   It can collect 1000 custom solutions
8. Optional rechargeable battery
   It can be used normally without AC power supply
9. With an overview interface to view the operating status of each channel in real time
10. Quick guidance plan
    Generate treatment parameters based on treatment depth, tissue status, and treatment area

TECHNICAL SPECIFICATIONS			
HB-UL1	HB-UL2	HB-UL3	HB-UL4
1 pluggable ultrasonic channel	2 pluggable ultrasonic channels	1 adsorption ultrasonic channel	2 adsorption ultrasonic channels
Standard with A28 type	Standard with A28 type, A13 type	Standard with A28V type	Standard with A28V type
Optional A13, A25,	Optional A25, A28V,	/	/

RADIAL SHOCKER THERAPY HAOBRO

✪ PRODUCT PRINCIPLE

The compressed air generated by the program control of the pulse acoustic wave into a highly accurate ballistic shock wave, the use of equipment unique frequency, through the positioning and movement of the Shockwave Transmitter can produce cavitation effect, stress effect, analgesic effect, metabolic activation effect on the human body.

✪ FEATURES

1. 10.1-inch color touch screen
2. Built-in and customized protocols
3. 4 pain assessment function modes with evaluation results
   Dynamic VAS, static VAS, sleep VAS, facial expression measurement chart
4. Patient data management
   Can input patient information, view, edit, delete, search, add, and load
5. Protective function
   Handpiece detachment alarm
   Insufficient air pressure alarm
6. Step intensity and step frequency can be set
7. The service life of the transmitters and bullet is up to 2 million shots
8. Two types of transmitters

TECHNICAL SPECIFICATIONS

HB100M	HB101M	HB102M
Single channel	Single channel	Dual channel
Portable	Cart-Based	Cart-Based
Shockwave Handpiece x1 +Vibration Handpiece x1		Shockwave Handpiece x2 +Vibration Handpiece x1

ELECTRO MAGNETIC HAOBRO

Using computer information simulation technology to synthesize simulated biological current and biological magnetic field, through the electrode pads attached to the mastoid parts on both sides and special magnetic therapy caps, it can non-invasively penetrate the skull barrier from outside the skull to stimulate the parietal nucleus area and improve the elasticity of cerebrovascular, increase local blood flow in the brain, promote brain microcirculation, accelerate the metabolism of brain cells, and accelerate the recovery of brain functions.

✪ FEATURES

1. Four powers in one
2. Dual screen display, equipped with a shuttle button, easy to operate
3. Built-in 11 kinds of treatment prescriptions
4. Four unique treatment frequencies 23.81Hz, 15.87Hz, 15.87Hz, 11.90Hz
5. Four treatment modes

TECHNICAL SPECIFICATIONS			
HB510B	HB520B	HB510D	HB520D
Single channel	Dual channel	Single channel	Dual channel
Portable	Portable	Cart-based	Cart-based
1-channel main electrode treatment	2-channel main electrode treatment	1-channel main electrode treatment	2-channel main electrode treatment
2-channel auxiliary electrode treatment	4-channel auxiliary electrode treatment	2-channel auxiliary electrode treatment	4-channel auxiliary electrode treatment
1-channel rTMS treatment	2-channel rTMS treatment	1-channel rTMS treatment	2-channel rTMS treatment

ELECTROTHERAPY NERVE STIMULATION HAOBRO

Nerve and muscle electrical stimulators output specific low-frequency pulse currents, which can directly excite nerves and muscle tissues, cause rhythmic muscle contractions, and improve muscle strength.

✪ FEATURES

1. Color touch screen & one-key shuttle design, easy to operate
2. Electroacupuncture treatment
3. Negative pressure suction therapy
4. Electrode therapy

TECHNICAL SPECIFICATIONS			
HB-SJ1	HB-SJ3	HB-SJ5	HB-SJ6
Single channel dual output	Dual channels and four outputs	Three channels and six outputs	Eight channels and eight outputs
Portable	Portable	Cart-based	Cart-based
1-channel electrode + 1-channel electric needle output	2-channel electrodes + 2-channel electric needle outputs	2-channel electrodes + 3-channel electric needles + 1-channel negative-pressure output	8-channel electrodes

SPASMODIC LOW STIMULATOR HAOBRO

Two sets of specific low-frequency pulse currents are alternately output - one set is used to stimulate the spastic muscles, and the other set of currents stimulate the antagonist muscles. Through the mutual inhibition of the two sets of currents, the spastic muscles are relaxed, the muscle tension is reduced, and the muscle strength of the antagonist muscles are increased, thereby the functions of the limbs is improved.

✪ FEATURES

1. Color touch screen & one-key shuttle design
   Real-time display, easy to operate
2. Two treatment electrodes
   Repetitive treatment electrodes; disposable treatment electrodes
3. Negative pressure suction therapy
4. Built-in 10 kinds of treatment prescriptions

TECHNICAL SPECIFICATIONS

HB-JL1	HB-JL3	HB-JL5
Single channel and dual outputs	Dual channels and four outputs	Three channels and six outputs
Portable	Portable	Cart-based
2-channel electrode output	4-channel electrode output	4-channel electrode + 2-channel negative-voltage outputs

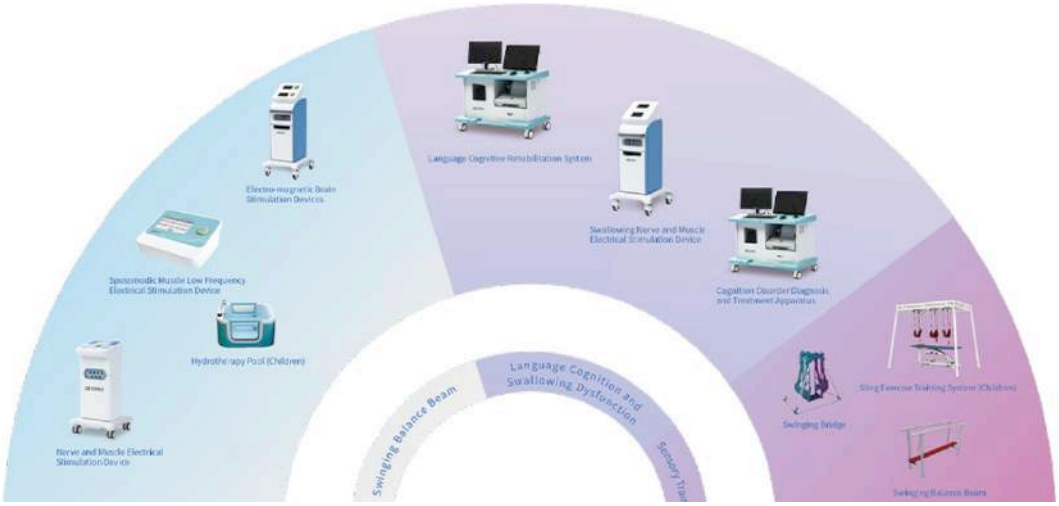

MYOELECTRICAL STIMULATOR HAOBRO

By collection of the patient's surface myoelectricity signal, use of electronic information technology to amplify it, and conversion of it into visual and auditory feedback to the patient and medical staff, so that the patient can understand their own physiological changes, and through conscious changes, the patient's physiological changes are directed towards a certain target direction for improvement to carry out physical and mental illness and physical rehabilitation.

TECHNICAL SPECIFICATIONS	
HB120B	HB120D
Dual channel	Dual channel
Portable	Cart-based

FEATURES

1. 8-inch LCD touch screen display
2. Electrode therapy
3. Built-in multiple treatment modes
4. Built-in 61 treatment prescriptions

CLINICAL ADVANTAGE

- It collects and analyzes biological myoelectricity through software without subjective judgment of medical staff;
- After obtaining the results through software analysis, it uses low-frequency electrical stimulation of nerves and muscles to restore the function of the stimulated nerves and muscles;
- It is of high efficiency and can reduce the work intensity of medical staff;
- It allow patients to clearly understand the status and changes of their physiological activities and increase their confidence.

SHORT WAVE THERAPY HAOBRO

The method of treating diseases using high-frequency electromagnetic fields generated by shortwave current is called shortwave therapy. The short wave therapy device can generate a clinical electromagnetic field with a frequency of 27.12MHz, which acts on the human body through the application device, generating different levels of heat at the treatment site to treat related diseases.

TECHNICAL SPECIFICATIONS		
HB-SW200C	HB-SW200L	HB-SW400
Vertical	Vertical	Vertical
Capacitive applicator	Inductive applicator	Capacitive applicator + Inductive applicator

FEATURES

1. **Portable operation**
   LCD touch screen + one key shuttle
2. **Two kinds of output**
   Continuous output, pulse output
3. **Automatic tuning**
   Bring the treatment to an appropriate output state
4. **Diversification**
   Applicator selection
5. **High stability**
   High energy conversion rate and low radiation interference

ELECTRIC DEVICERS HAOBRO

Apply a certain frequency of current to the body, to cause comfortable muscle contrac-tions, to train muscles, to inhibit pain fiber conduction, to release painkillers, to improve blood circulation, to soften the scar, to release the conglutination.

FEATURES

1. **7 / 10.1 " color touch screen**
   With aesthetic Shape, easy to operate
2. **Multiple interference modes**
   With normal, dynamic and other modes, apply for different conditions, meet different clinical needs
3. **Built-in treatment prescription**
   Provide professional treatment pro-grams, Provide suggestions and custom-ized prescription functions, convenient for clinical operation
4. **Multiple security protection**
5. **Electrode sheet heating function**
   Electrode sheet heating function, human-ized design, improve human comfort

TECHNICAL SPECIFICATIONS			
HB-ZP10	HB-ZP30	HB-ZP40	HB-ZP50
Portable	Portable	Cabinet Type	Cabinet Type
2 channels	4 channels	4channels	8channels
IF+ interference	IF+ interference	IF+ interference +iontophoresis	IF+ interference +iontophoresis

DRUG INTRODUCTION THERAPY HAOBRO

FEATURES

1. 5-inch color LCD touch screen
2. In hand-held portable design, it can be freely combined into a desktop model
3. With counting function, it can automatic identify the counting card and read the number of uses
4. Hyperthermia function: Temperature adjustment in the adjustment range of 38°C ~ 44°C
5. Three treatment modes, multiple prescription options, and five output waveforms

TECHNICAL SPECIFICATIONS		
HB-LZ21SW	HB-LZ22SW	HB-LZ21S
2 (1 pulse + 1 ultrasound)	2 (2 pulses)	2 (1 pulse + 1 ultrasound)

INTERFERENCIAL ELECTRICAL DEVICER HAOBRO

Cross input of two groups or more of intermediate frequency currents of different frequencies into the human body, interfering with each other in the body to generate difference frequency currents, which can relieve pain, excite neuromuscular tissue, promote local blood and lymphatic circulation, loosen adhesion, and improve smooth muscle strength, etc. effect.

FEATURES

1. 7-inch true color touch screen display
   Good-looking appearance and convenient operation
2. Dual-channel output mode
   Multiplex negative pressure adsorption therapy, Multiplex electrode therapy
3. Five kinds of carrier frequency
4. Ten interference modes, suitable for different diseases and meeting different clinical needs
5. Six kinds of dynamic rhythms are adjustable: 0~15s, tolerance ±3s
6. Top plate heating function
   Humanized design increases comfort

TECHNICAL SPECIFICATIONS

HB-ZP2	HB-ZP4	HB-ZP6
Single-channel countertop	Single-channel cabinet type	Dual-channel cabinet type
3-channel electrodes + 3-channel negative pressure outputs	3-channel electrodes + 3-channel negative pressure outputs	6-channel electrode + 6-channel negative pressure outputs
Stereo dynamic interference	Stereo dynamic interference	Stereo dynamic interference
Top plate heating	Top plate heating	Top plate heating

MICROWAVE THERAPY HAOBRO

The 2450MHz high-frequency electromagnetic field acts on the affected area to cause high-frequency oscillations of ions, water molecules, and dipoles in tissue cells to generate heat, which can promote blood circulation, improve metabolism, accelerate tissue repair, reduce inflammation, reduce swelling, relieve pain, and relieve muscle spasm, etc.

TECHNICAL SPECIFICATIONS

AMT-B1	AMT-C
Cart-based	Cart-based
Microcomputer control, single microwave source	Microcomputer control, double microwave source

FEATURES

1. The operation is simple and can be mastered by general medical staff
2. The operation time is short, which is usually only a few seconds
3. The patient has no pain or bleeding during the operation
4. There is no sputtering to medical staff and no smell and fog of tissues burnt
5. The treatment effect is good, the time required for healing is short, and there is no scar

THERMAL TENS THERAPY HAOBRO

Thermotherapy is the use of water to transfer heat energy to the body, producing biological effects in the body to achieve the goal of preventing and treating diseases. Low frequency pulse current stimulates nerve or muscle contraction to achieve therapeutic effects, causing muscle recruitment activity, enhancing muscle strength, improving local blood circulation, promoting the recovery of central motor control function, and reconstructing normal motor modes.

✪ FEATURES

1. 7-inch color touch screen with rotary button design for efficient operation
2. Output electrode with one positive and two negative, with left and right balance adjusted as needed
3. Warm function with six options
4. Multiple treatment modes available for clinical selection
5. Built in negative pressure suction

TECHNICAL SPECIFICATIONS	
SL-RZB-A	SL-RZB-C
Vertical type	Portable type
2 channels	1 channel
Warm electric stimulation+negative pressure suction	Warm electric stimulation+negative pressure suction

STEAM THERAPY HAOBRO

✪ FEATURES

1. Five utility model patents
2. Smart countdown function high stability and safety
3. Water and electricity isolation design

TECHNICAL SPECIFICATIONS	
HB1000	HB4000
Single nozzle	Double nozzle

DEEP MUSCLE STIMULATOR HAOBRO

✪ PRODUCT PRINCIPLE

The continuous vibration of the instrument acts on deep muscles and soft tissues, effectively alleviating tissue adhesion and excessive excitement, quickly decomposing inflammatory products, promoting metabolism, and improving the tissue environment; at the same time, the receptors are constantly affected by vibration stimulation, thereby pain transmission is inhibited.

✪ FEATURES

1. All-metal treatment device of strong power, imported from Europe
2. In portable handbag, the device is small and light
3. The treatment probe is made of titanium alloy and has good mechanical properties
4. Innovative design, with three specifications of treatment probes, meeting various clinical treatment needs of human myofascial chain
5. Multi-parameter adjustable (HB-DMS200): vibration frequency 15-60Hz, treatment time 0-30min
6. The amplitude of the treatment head is 6mm and the highest can hit 3,600 times per minute

TECHNICAL SPECIFICATIONS	
HB-DMS100 (fixed frequency)	**HB-DMS200 (variable frequency)**
Frequency: 60Hz Amplitude: 6mm	Time: 0-30min Frequency: 15-60Hz Amplitude: 6mm
Titanium alloy probe: 20mm, 25mm, 35mm	
Vibration meter size: 270mm x 150mm x 54mm	

CHEST WALL EXPECTORATOR HAOBRO

✪ PRODUCT PRINCIPLE

The host generates high-frequency air pulses through rapid inflation and deflation. The air pulses inflate the airbag vest through the catheter to generate vibrations, thereby compressing the chest cavity at a certain frequency, causing the airflow to quickly pass through the lung lobes and respiratory tracts, and promoting mucus and metabolites on the mucosal surface to get loose, be liquefied, fall off, and move to the mouth. After reaching the mouth, phlegm is discharged through normal cough or negative pressure suction.

✪ FEATURES

1. High-definition touch screen, easy to operate
2. Dedicated modes for adults and children respectively
3. One-button emergency stop, stable and reliable
4. Two functions in one: sputum expectoration and atomization
5. Especially made vests of multiple models

EXPECTOLATOR VIBRATION CHEST HAOBRO

✪ PRODUCT PRINCIPLE

The percussion head produces vertical and horizontal therapeutic forces on the surface of the human body. The percussion and tremor produced by the vertical therapeutic force can promote the relaxation and liquefaction of mucus and metabolites on the mucosal surface of the respiratory tract, and the directional push generated by the horizontal force helps the liquefied mucus to be excreted from the body according to the selected direction.

✪ FEATURES

1. 11 different specifications of treatment heads
2. 10 treatment modes (for adults and children)
3. Two-in-one: sputum expectoration and atomization
4. Super large touch screen, simple and easy to operate interface display
5. With hand-held body position drainage operation, easier to use
6. Satisfying the need for expectoration in multiple directions vertically and horizontally

TECHNICAL SPECIFICATIONS

HB-KPT4	HB-KPT6
Dual channel	Dual channel
Cart-based	Cart-based
Sputum drainage	Expectoration + atomization
Adults and children	Adults and children
220VA	3000VA

LOWER LIMBS VIBRATION TRAINING HAOBRO

✪ FEATURES

1. **Console operation**
   Connect the power cord and turn on the power switch. The control console is used to control the treatment parameters and manually adjust the treatment bed placement angle. The treatment parameters are intensity, frequency, preset parameter mode and treatment time. Under the control of the console, the vibration machine can achieve various different frequencies of regular vibration to meet the training needs of different parts of the human body.
2. **Forearm pallet height/rotation operation**
   The height and angle of the forearm bracket can be adjusted according to the actual needs of the user to meet the use of different age levels of users.
3. **Emergency stop switch**
   In the training process, if you need the product emergency stop, you can directly press the emergency stop button, as shown in the figure. When the emergency stop button is pressed, the red light is on, indicating that the product is stopped. Press the emergency stop button again and the product will resume working.

✪ PRODUCT PRINCIPLE

The lower limb vibration training system consists of a base, a machine base, a treatment bed, a vibrating machine, and a control console.

INFRARED THERAPY HAOBRO

✪ PRODUCT PRINCIPLE

Infrared therapy

When infrared rays act on the body, the skin and subcutaneous tissues convert the absorbed infrared energy into heat, which can cause vasodilation, improve local blood circulation, promote metabolism, reduce muscle tension, and reduce the excitability of sensory nerves, thereby achieving therapeutic effects such as analgesia, detumescence, and relieving muscle spasms

Polarized light therapy

Polarized light therapy, based on traditional meridian theory, directly irradiates acupoints with small light points; Guided by modern theory, direct irradiation is applied to local lesions and ganglia, nerve trunks, nerve plexus and other parts, and the combination of the two theories can achieve the therapeutic effect of light acupuncture and light moxibustion.

✪ FEATURES

1. True color touch screen display
2. Combining points and surfaces for a wider range of treatment options
3. Three channel independent control
4. Multi directional and angle adjustable bracket

TECHNICAL SPECIFICATIONS

SL-PZG-A	SL-PZG-B	SL-PZG-C
LCD display	LCD display	LCD display
1 divergent infrared radiation head +2 clustered polarized light radiation head	2 Clustered Polarized Light radiation head	1 divergent infrared radiation head +1 cluster polarized light radiation head

INFRARED THERMAL THERAPY HAOBRO

✪ FEATURES

1. Large true-color touch screen
The operation menu is simple and clear
2. Dual channel independent control
It can treat two patients at the same time
3. Powerful power and deep treatment
High power light source: optical density > 235mW/cm² at 20cm
4. Four safety protection measures
Power failure protection, anti-tipping protection, overheat alarm, safety distance setting
5. Electric lifting system
The treatment angle can be adjusted and easily positioned according to the patient's body position
6. Patient information management and memory function
With patient information management,treatment plan and memory function

✪ PRODUCT PRINCIPLE

The infrared thermal radiation therapy device mainly outputs infrared therapeutic irradiance for the treatment of pain and inflammation, which can improve blood circulation, promote tissue repair and regeneration, eliminate swelling, and accelerate wound healing.

HB-HW750	HB-HW750A	HB-HW750B
Single light source	Single light source	Dual light source
Manual lifting	Electric lifting	Electric lifting

SMART MASSAGE THERAPY HAOBRO

✪ FEATURES

1. A new method of pain management.
Muscle massage, chiropractic, deep muscle stimulation and other
functions are available. The combined therapy has good curative
effect and high efficiency

2. 7-inch color touch screen
7-inch color touch screen design, easy to operate

3. The vibration speed of the massager can be adjusted
in 9 gears, and the hitting force of the chiropractic gun
can be adjusted in 10 gears
Meet the needs of various clinical treatment intensity output

4. A variety of massage head and chiropractic head optional
Increase departmental revenue and meet different clinical needs

5. Multiple treatment modalities
Manual, automatic, cervical spine, thoracic spine, lumbar spine, limb joints
and other modes can be selected, humanized design, easy to clinical

✪ PRODUCT PRINCIPLE

AM series Smart Massage Chiropractic device uses horizontal and vertical rhythmic vibration and adjustable pulsed high-energy impact force. The two therapies are combined to work on the deep muscle and skeletal system, thereby improving the level of microcirculation metabolism and bone structure.It has a good auxiliary effect on muscle spasm, soft tissue pain and spinal correction respectively.

RHYTHM THERAPY DEVICE-FIZYOMED

✪ FIELDS OF APPLICATION

- Tendon damages
- Muscle spasms
- Spinal and Cervical disc hernia and pains
- Muscle tearing
- Cerebral palsied
- Cellulite
- Capillary vessel system diseases (varicosity)
- Sclerosis
- Weight Loss treatment
- Tendon injuries
- Osteoporosis pains
- Lymph and edema treatments

Fizyoterra 1000 rhythm therapy device applies mechanical vibrations identical to natural physiological vibrations in human body by means of the particular therapy headpiece and it stimulates the nervous system and muscles rhythmically. As a result of these vibrations applied between 8 -12 Hz. relaxing effect is experienced by the patients. Consequently, metabolism is returned to its normal state in a short time and recovery and renovation process in the tissues restarted at cellular level.

TECHNICAL SPECIFICATIONS:	
Güç Girişi / Power Supply	220 - 240V 50/60 Hz
Ölçüleri / Dimensions	200x250x210 mm
Ağırlık / Weight	5 kg
Tedavi Zamanı / Therapy Duration	1 - 99 dk / min
Hız / Speed (Max)	%10 - %80
Sınıf Beyanı / Class Declaration	class I
Sertifikalar / Certificates	EN ISO 13485 : 2016
	CE (Declaration Of Conformity)

INFRARED UNIT-FIZYOMED

✪ FEATURES

- 2 treatment lamps
- Front end of the unit is protective.
- Adjustable height
- Single use or dual use of the treatment lamp is available
- Treatment time adjustable
- Easy mobility
- Heat resistance electrical cabling
- Anti rust electro static paint on all metal / steel parts

TECHNICAL SPECIFICATIONS	
Boyu / Legth	130-200 cm arası ayarlı
Eni (Tekerlekli Ayak Kısmı Dahil) / With Of The Leg With Castors	46 cm
Ampul Şiddeti / Bulb Intensity	2 x 250 Watt
Tedavi Zamanı / Therapy Duration	0-60 dk/min
Yaklaşık Ağırlığı / Approx. Weight	8 kg
Sınıf Beyanı / Class Declaration	class I
Sertifikalar / Certificates	EN ISO 13485:2016
CE (Declaration Of Conformity)	min. 80
TPE Tescil no: 2008 02295	125/250
Standart Aksesuarları / Standard Accesories	2 Adet 250 Watt Infraruj Lambası

INVACMED-MED INMED

FEATURES

- 2 channels.
- Connections for pneumatic - electric cables with vaccuum electrodes.
- Continuous or pulsed vaccum mode.
- Fast, practical fixing of electrodes in hard-to-reach places of the body.
- Perfect electrode adherence to the body.
- Cooperation with electrotherapy units.
- Possibility to applicate the currents through vaccuum electrodes (with integrated metal electrodes).
- Connections for conventional electrodes for electrotherapy.
- Electronic control and protection against too high vacuum force.
- Indication of water tank filling.
- Power saving operation.
- Display located at an angle making it easier to operate the device

TECHNICAL DATA:	
Pulse frequency (pulsed mode) [pulses/min.]:	15-90
Vacuum [mbar]:	60-400
Number of electrodes:	4
Power supply [V/Hz]:	230/50-60
Current consumption [A]:	0,1
Dimensions [cm]:	33,5 x 13,5x 32,5
Weight [kg]:	3,4
Dehydrator reservoir capacity [ml]:	min. 80
Fuse [mAT/V]:	125/250
Optical alarm level "H□O"	no more than 50 ml

MAGNETRONIC MF-2,MF-12-MED INMED

FEATURES

- 2 magnetotherapy channels.
- Possibility of performing two treatments at the same time.
- Colour touch screen display (4.3").
- User-friendly touch screen and button controls.
- Ready to use preset treatment programs for popular treatments.
- User-defined programs can be stored by the therapist.
- Individual adjustment of treatment settings.
- Fan control feature to minimize noise and power consumption.
- Treatment duration and number of performed treatments counter.
- Can be used as portable device.
- Magnetic field shapes: sine, rectangle and triangle, each of them unipolar or bipolar,
- MX1 - consecutive shape change at constant frequency, or
- MX2 - consecutive shape change at variable frequency

TECHNICAL DATA:	
Magnetic field frequency range [Hz]:	1-150
Magnetic field intensity [mT]:	0-8 (depends on applicator used)
Pulse / break duration [s]:	0.5-8
Work mode:	continuous or interrupted
Treatment timer [min]:	1-99
Power supply:	~230V 10%, 50Hz, 70VA
Electrical protection class:	I, type B
Dimensions (L x W x H) [cm]:	33,5 x 27 x 12,5
Weight (of control unit) [kg]:	2,5

FEATURES

- 2 independent treatments. The device features an innovative control system - each applicator has an independent treatment timer and can be independently initiated. As a result, Magnetronic MF-12 can perform 2 independent magnetotherapy treatments in different time, with the same treatment settings.
- Connections for two applicators

TECHNICAL DATA:	
Magnetic field frequency range [Hz]:	1-100
Magnetic field intensity [mT]:	0-20
Pulse/break duration [s]:	0,5-8
Power supply [V/Hz/W]:	230/50/200
Weight of control unit [kg]:	4,4
Dimensions of control unit (L x W x H) [cm]:	33,5 x 27 x 12,5
Shapes of magnetic field modulation:	sine, rectangle, triangle - unipolar and bipolar

MAGNETRONIC MF24-MED

FEATURES

- 5 simultaneous treatments
- The device features an innovative control system – each applicator has an independent treatment timer. As a result, Magnetronic MF-24 can perform 4 simultaneous independently initiated magnetotherapy treatments (2 treatments per channel) and 1 laser therapy treatment. In total Magnetronic MF-24 features 5 treatment timers.
- 2 independent magnetotherapy channels with separate adjustments.
- Each channel can connect 2 applicators.
- Independent laser therapy channel for treatments with a laser probe.

TECHNICAL DATA:	
Magnetic field frequency range [Hz]:	1-100
Magnetic field intensity [mT]:	0-20
Pulse/break duration [s]:	0,5-8
Power supply [V/Hz/W]:	230/50/400
Weight of control unit [kg]:	6,2
Dimensions of control unit (H x W x L) [cm]:	14,2 x 36,4 x 33,5
Shapes of magnetic field modulation:	sine, rectangle, triangle – unipolar and bipolar
Magnetic field applicators (optional):	AS-200K, AS-315K, AS-600K, AS-200N, AS-315N, AS-600N, AP-100, APP-100, AP-1D, APP-2D
Mobile trolleys for applicators (optional):	S-200N, S-315N
L-6 couch for applicators (optional):	AS-600K, AS-600N

AS-200K

AS-200N

AS-315K

AS-315N

AS-600K

AS-600N

AP-1D

APP-100

AP-2D

Couch L-6

Applicator trolley S-315N

Applicator trolley S-200N

MULTITRONIC MT-4-MED INMED

FEATURES

- Modern device for two-channel electrotherapy and laser therapy.
- Two simultaneous treatments option.
- Colour touchscreen display (4.3").
- User-friendly touchscreen and button controls.
- Ergonomic and lightweight probes.
- Ready to use preset treatment programs for popular treatments.
- Easy to store user-defined programs thanks to on-screen keyboard.
- Independent adjustment of treatment settings.
- Fan control feature to minimize noise and power consumption.
- Treatment duration and number of performed treatments counter.
- Can be used as portable device.

TECHNICAL DATA	
Power supply:	~230V 10%, 50Hz, 70VA
Electrical protection class:	I, type BF
Dimensions [mm]:	335 x 270 x 125 mm
Weight (of control unit):	3.1 kg
Laser class:	3B
Laser treatment timer:	1 s -99 min

DEEP MUSCLES STIMULATION ZEPU

ZEPU-K5000A

Deep muscle stimulator

✪ FEATURES

- Vibration and rebounding technology.
- Adjustable frequency technology.
- Several hand pieces for option.
- Small, light weight and portable with handbag.

ZEPU-K5000A SPECIFICATIONS	
Size (mm):	266×50×146(L×W×H)
Weight:	2.5kgs

ZEPU-L100

Cryo therapy apparatus

✪ FEATURES

- Fast cooling and significant effect.
- Pinpoint the accurate treatment area.
- Special used for acute sports injury.

ZEPU-L100 SPECIFICATIONS	
Size (mm):	320×585×870(L×W×H)
Weight:	55kgs

DYNAMIC INTERFERENCE ELECTRIC ZEPU

ZEPU-G60

Stereoscopic dynamic interference electric therapeutic apparatus

✪ FEATURES

- Three-way output, 6-electrode three-dimensional space stimulation effect.
- Independent dual channel.
- Adsorption electrode.

ZEPU-G60 SPECIFICATIONS	
Size (mm):	950x338x458(L×W×H)
Weight:	25kgs

ZEPU-K2

Upper and lower limb air pressure therapy apparatus

✪ FEATURES

- 6-chamber airbags, stacked design, effectively prevent back-flow of body fluids.
- 10 working modes, 1 standard mode and 10 extended modes.
- The host can connect 2 inflatable airbags at the same time.
- The host adopts special shock absorbing device with low noise.

ZEPU-K2 SPECIFICATIONS	
Size (mm):	360×270×175(L×W×H)
Weight:	12kgs

INFRARED ZEPU

ZEPU-GL575/750

Infrared Therapeutic Apparatus

✪ FEATURES

- Mobile floor cabinet and lifting treatment head design.
- Electric lifting easy to set the height.
- Color LCD touch screen.
- User-defined treatment plan and store it.

ZEPU-GL575 SPECIFICATIONS	
Size (mm):	560 x 520 x (1200-1600) (L×W×H)
Weight:	30kgs

ZEPU-GL750

ZEPU-GL750 SPECIFICATIONS	
Size (mm):	500×500× (1200-1600) (L×W×H)
Weight:	65kgs

MEDICAL LASER THERAPY ELECTRONIC ZEPU

PRODUCT PRINCIPLE

When semiconductor laser acts on the body, it will produce a biological stimulating effect, which can promote cell regeneration, accelerate tissue repair, improve blood circulation, reduce inflammation, relieve pain, reduce edema, and regulate the body's immune function. It is not only suitable for superficial skin lesions, but also for deep tissue lesions, showing a therapeutic effect from shallow to deep.

FEATURES

- Combining treatment at selected spots with that in the entire area
  Double treatment head, square treatment head has large treatment area, pen type treatment head has focusing function and strong penetrability.
- Dual-channel output
  Two independent outputs, namely, A and B, which can be Independently controlled
- Streamlined operations
  Large LCD touch screen, humanized operation interface; cylinder hydraulic support can be accurately adjusted in all directions, simple and flexible.
- Stable performance
  GaAlAs laser and professional circuit design have superior performance and high stability.

SPECIFICATIONS

ZYS-808A	ZYS-808	ZYS-808B
Single output	Dual-channel output	Dual-channel output
Square treatment head	Square therapeutic head+pen therapeutic head	2 square treatment heads

SHOCK WAVE THERAPY SYSTEM ZEPU

ZEPU-C2

Extracorporeal shock wave therapy system

✪ FEATURES

- Independent dual channel.
- Double channels and double handles, 6 treatment handpieces and 2 massage handpieces for options.
- Provide automatic mode and manual selection mode.

ZEPU-C2 SPECIFICATIONS	
Size (mm):	400x320x160(LxWxH)
Weight:	8kgs

ZEPU-D50

Low frequency electronic pulse therapy apparatus

✪ FEATURES

- Promote local blood circulation in the human body, delay muscle atrophy.
- Using vacuum adsorption pressure, the adsorption pressure can be adjusted.

ZEPU-D50 SPECIFICATIONS	
Size (mm):	410x345x180(LxWxH)
Weight:	11.2kgs

ZEPU-P20

High-frequency chest wall oscillation sputum meter

✪ FEATURES

- Color high-definition LCD display, navigation operation guide.
- Provide 3 sizes of inflatable vest to choose from.
- Pneumatic emergency stop safety switch.
- Optional automatic detection and control modules.
- Configure the smart bluetooth wireless connection port.

ZEPU-P20 SPECIFICATIONS	
Size (mm):	350x380x240 (LXWXH)
Weight:	15kgs

ZEPU-K5000A

Deep muscle stimulator

ZEPU-K5000A
Deep muscle stimulator

FEATURES
- Vibration and rebounding technology.
- Adjustable frequency technology.
- Several hand pieces for option.
- Small, light weight and portable with handbag.

ZEPU-K5000A SPECIFICATIONS	
Size (mm):	266x50x146(LxWxH)
Weight:	2.5kgs

ZEPU-L100
Cryo therapy apparatus

FEATURES
- Fast cooling and significant effect.
- Pinpoint the accurate treatment area.
- Special used for acute sports injury.

ZEPU-L100 SPECIFICATIONS	
Size (mm):	320x585x870(LxWxH)
Weight:	55kgs

ZEPU-G60

Stereoscopic dynamic interference electric therapeutic apparatus

ZEPU-G60

Stereoscopic dynamic interference electric therapeutic apparatus

✪ FEATURES

- Three-way output, 6-electrode three-dimensional space stimulation effect.
- Independent dual channel.
- Adsorption electrode.

ZEPU-G60 SPECIFICATIONS	
Size (mm):	950x338x458(LxWxH)
Weight:	25kgs

ZEPU-K2

Upper and lower limb air pressure therapy apparatus

✪ FEATURES

- 6-chamber airbags, stacked design, effectively prevent back-flow of body fluids.
- 10 working modes, 1 standard mode and 10 extended modes. The host can connect 2 inflatable airbags at the same time. The host adopts special shock absorbing device with low noise.

ZEPU-K2 SPECIFICATIONS	
Size (mm):	360x270x175(LxWxH)
Weight:	12kgs

ZEPU-C2,ZEPU-D50 AND ZEPU-P20

ZEPU-C2

Extracorporeal shock wave therapy system

✪ FEATURES

- Independent dual channel.
- Double channels and double handles, 6 treatment handpieces and 2 massage handpieces for options.
- Provide automatic mode and manual selection mode.

ZEPU-ZD1 SPECIFICATIONS	
Size (mm):	400x320x160 (LxWxH)
Weight:	8kgs

ZEPU-D50

Low frequency electronic pulse therapy apparatus

✪ FEATURES

- Promote local blood circulation in the human body, delay muscle atrophy.
- Using vacuum adsorption pressure, the adsorption
- pressure can be adjusted.

ZEPU-D50 SPECIFICATIONS	
Size (mm):	410x345x180(LxWxH)
Weight:	11.2kgs

ZEPU-P20

High-frequency chest wall oscillation sputum meter

✪ FEATURES

- Color high-definition LCD display, navigation operation guide.
- Provide 3 sizes of inflatable vest to choose from. Pneumatic emergency stop safety switch.
- Optional automatic detection and control modules. Configure the smart bluetooth wireless connection port.

ZEPU-P20 SPECIFICATIONS	
Size (mm):	350x380x240(LXWXH)
Weight:	15kgs

ZEPU-ZD1,2,3,5,6

VERTICAL WAVE VIBRATION SERIES

✪ FEATURES

- Vertical sound wave vibration.
- No working noisy.
- Accelerated speed could be controlled.
- Adjustable vibration intensity.
- More accurate and high reliability.

ZEPU-ZD1
Vertical wave vibration

ZEPU-ZD1 SPECIFICATIONS	
Size (mm):	840x860x1480 (LxWxH)
Weight:	87kgs

ZEPU-ZD2
Vertical wave vibration

ZEPU-ZD2 SPECIFICATIONS	
Size (mm):	840x860x1480 (LxWxH)
Weight:	87kgs

ZEPU-ZD3

ZEPU-ZD3 SPECIFICATIONS	
Size (mm):	355x1530x1070 (LxWxH)
Weight:	240kgs

ZEPU-ZD5

ZEPU-ZD5 SPECIFICATIONS	
Size (mm):	1980x800x650 (LxWxH)
Weight:	145kgs

ZEPU-ZD6

ZEPU-ZD5 SPECIFICATIONS	
Size (mm):	870x770x1070 (LxWxH)
Weight:	72kgs

02

Exercise & Strength
Rehabilitation

EXERCISE QUADRICEPT FERROX

LEGS

Art. 140606 Quadriceps bench

(1) Art. 140606 – JOLLY

- for leg functional rehabilitation and strengthening exercises • special device reducing flexing and extending angle
- independent right and left loads
- 80° adjustable backrest tilt
- dimensions 165 x 50 x 55h cm
- Non-medical device

(2) OPTIONS

Art. 140111/A – WEIGHT DISCS 0,5 kg
Art. 140111/B – WEIGHT DISCS 1 kg
Art. 140111/C – WEIGHT DISCS 2 kg
Art. 140111/D – WEIGHT DISCS 5 kg
Maximum recommended load: 10 kg on each sid

PROSTRECH

(3) Art. 250226 – PROSTRECH® to enhance leg stability, muscle tone, the extension of the achilles tendon and of the plantar fascia

- Medical device

HAND EXERCISE FERROX

1

2

ERGOTHERAPY

(1) Art. 260081 – MSD SQUEEZE EGGS
- Assortment of 5 pieces:
x.soft, soft, medium, firm, x.firm
- Medical device

(2) Art. 260084S – MSD SQUEEZE BALLS
- Assortment of 5 pieces:
x.soft, soft, medium, firm, x.firm
- Medical device

(3) Art. 260080 – THERAFLEX® Putty – Latex free paste
- Assortment of 5 resistance levels, 85 g each
- Medical device

3

POSTURAL MIRROW FERROX

POSTURE MIRRORS

(1) Art. 260438 – MOVABLE AND TILTING MIRROR • steel frame, epoxy coated
- pivoting castors
- grid 5 x 5 cm
- dimensions 100 x 170 h cm
- Medical device

VERSION WITH PLAIN SURFACE
Art. 260438L – MOVABLE AND TILTING MIRROR
- steel frame, epoxy coated
- pivoting castors
- dimensions 100 x 170 h cm

(2) Art. 260439 – MOVABLE MIRROR
- steel frame, epoxy coated
- pivoting castors
- grid 5 x 5 cm
- dimensions 100 x 170 h cm
- Medical device

VERSION WITH PLAIN SURFACE
Art. 260439L – MOVABLE MIRROR
- steel frame, epoxy coated
- pivoting castors
- dimensions 100 x 170 h cm

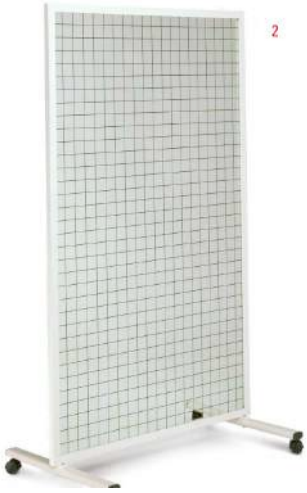

HAND EXERCISE FERROX

WALL BARS

WALL BARS WITH UPRIGHT SUPPORTS AND 14 BEECH RUNGS

(1) Art. 112264 – DOUBLE 180 x 250 h cm
- Medical device

OPTIONAL ACCESSORIES:
(4) Art. 111840 – ABDOMINAL BOARD ** with foot stop 180 x 30 x 35 h cm

(5) Art. 240285 – semi-cylindrical CUSHION ** 30 x 15 x 8 h cm

BEANCH EXERCISE FERROX

WALL BARS

- Tibial supports on both sides for independent stretching and flexing movement of knees and / or elbows
- Balancing pole which allows for height adjustment of the tibiae supports
- Width adjustment for flexion and extension elements
- Moveable handle bar, adjustable on three levels
- Backrest inclination: 12°
- Seat inclination: 4°
- 20 kg weight plates, split between the two sides, equipped as standard
- Steel frame, epoxy painted
- Fire-retardant padding and covering, class 1IM, foam density 40
- Stabilizing base-skids.

Bench dimensions:

- height 120 cm,
- balancing pole width 85 cm,
- depth 90cm
- Seat height: 65 cm
- Seat width: 54 cm
- Seat depth: 50 cm
- Medical device
- Weight : 45 kg + 20 kg weight plates.

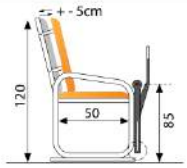

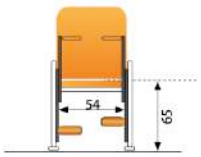

WALLBAR FERROX

WALL BARS

WALL BARS WITH UPRIGHT SUPPORTS AND 14 BEECH RUNGS

(2) Art. 112262 -SINGLE 90 x 250 h cm
- Medical device

UNI STANDARD WALLBAR 16 BEECH RUNGS

(3) Art. 112268 - SINGLE cm 90 x 260 h
- Medical device

OPTIONAL ACCESSORIES:
(4) Art. 111840 - ABDOMINAL BOARD ** with foot stop 180 x 30 x 35 h cm
(5) Art. 240285 - semi-cylindrical CUSHION ** 30 x 15 x 8 h cm

WALLBAR FERROX

WALL BARS

With steel and wooden beech rungs

WALL BARS WITH UPRIGHT STEEL SUPPORTS AND 14 BEECH RUNGS

(1) Art. 112220 - SINGLE 90 x 240 h cm
- Medical device

(2) Art. 112230 - DOUBLE 180 x 240 h cm
- Medical device

OPTIONAL ACCESSORIES:
(6) Art. 111840 - ABDOMINAL BOARD ** with foot stop 180x30x35h cm (7) Art. 240285 - semi-cylindrical CUSHION ** 30 x 15 x 8 h cm

WALLBAR FERROX

WALL BARS

With steel and wooden beech rungs

WALL BARS WITH UPRIGHT STEEL SUPPORTS AND 14 BEECH RUNGS

(3) Art. 112240 - WITH 100 CM OVERHEAD-PROJECTING ELEMENT
- Medical device

(4) Art. 112260 - 80 CM OVERHEAD-PROJECTING ELEMENT
- suitable for vertebral elongation
- dimensions 80 x 80 cm
- Medical device

(5) Art. 112261 – 70 CM OVERHEAD-
PROJECTING ELEMENT
- suitable for vertebral elongation
- dimensions 80 x 70 cm
- Medical device

OPTIONAL ACCESSORIES:
(6) Art. 111840 - ABDOMINAL BOARD ** with foot stop 180x30x35h cm (7) Art. 240285 - semi-cylindrical CUSHION ** 30 x 15 x 8 h cm

DUMBELL FISIOTECH

DUMBBELLS

Cast iron dumbbells covered in vinyl for a good grip. Pack of two.

MODELS	CODE
1 kg dumbbells	1417401
2 kg dumbbells	1417402
3 kg dumbbells	1417403
4 kg dumbbells	1417404
5 kg dumbbells	1417405

DUMBBELL RACK - CODE 1417451

HAND & SHOULDER EXERCISE FERROX

1

2

3

4

5

ERGOTHERAPY

(1) Art. 260190 – SHOULDER WHEEL ** for shoulder exercises
- equipped with four 130 cm long arms and four 110 cm long arms
- non-slip grip
- adjustable height
- variable resistance
- supplied with a kit for wall mounting
- dimensions 132 x 25 x 200 h cm

(2) Art. 260070-PANEL FOR ERGOTHERAPY **
- equipped with 9 different attachments
- wall-mountable and washable
- dimensions 100 x 60 x 7 cm

(3) Art. 260040 – VERTICAL STEEL SPIRAL **
- natural wood base
- dimensions 40 x 17 x 31 h cm

(4) Art. 260030 – HORIZONTAL STEEL SPIRAL **
- natural wood base
- dimensions 40 x 30 x 38 h cm

(5) Art. 260060-STEEL WORM **
- dimensions 40 x 17 x 21 h cm
- wall-mountable and washable
- dimensions 100 x 60 x 7 cm

6

7

(6) DUMBELL-CAST-IRON WEIGHT NYLON COATED **
Art. 140333 – Pair of 0,5 kg each
Art. 140334 – Pair of 1 kg each
Art. 140335 – Pair of 2 kg each
Art. 140336 – Pair of 3 kg each Art. 140337 – Pair of 4 kg each Art. 140338 – Pair of 5 kg each

(7) REINFORCED WRIST-ANKLE WEIGHTS **
PRO-Renforces
Art. 140381N – Pair of 1 kg each
Art. 140382N – Pair of 0,5 kg each
Art. 140391NPair of 1,6 kg each
Art. 140392N – Pair of 2 kg each
Art. 140393N – Pair of 2,5 kg each
Art. 140394N – Pair of 3 kg each
Art. 140397N – Pair of 3,5 kg each
Art. 140398N – Pair of 4 kg each
Art. 140401N – Pair of 5 kg each

BALL BATH FISIOTECH

GYMNIC CLASSIC

Ball used for various exercises in rehabilitation, in motor activity, for fitness and aerobics. Used in the Pilates method and in functional, sports and athletic training, too.
Class I Medical Device.

SPECIFICATIONS	
Recommended max load	**120 kg**
Tested max load	300 kg

MODELS	COLOURS	CODE
Ø 45 cm	**Yellow**	**1411011**
Ø 55 cm	Red	1411012
Ø 65 cm	Blue	1411013
Ø 75 cm	Yellow	1411014
Ø 85 cm	Red	1411015
Ø 95 cm	Blue	1411016
Ø 120 cm	Red	1411017

GYMNIC CLASSIC PLUS

The Gymnic Classic Plus is the same as Gymnic Classic, but with a greater safety for the user as in case of piercing, the ball deflates slowly. Class I Medical Device.

SPECIFICATIONS	
Recommended max load	**120 kg**
Tested max load	300 kg

MODELS	COLOURS	CODE
Ø 55 cm	**Red**	**1411021**
Ø 65 cm	Blue	1411022
Ø 75 cm	Yellow	1411023

WEIGHT ANKLE AND WRIST EXERCISE FISIOTECH

LEATHERETTE ANKLE AND WRIST WEIGHTS

Leatherette covering. Hook and loop fasteners.

MODELS	CODE
Pair 1 kg (2 x 0.5 kg each)	**1417301**
Pair 2 kg (2 x 1 kg each)	1417302
Pair 3 kg (2 x 1.5 kg each)	1417303
Pair 4 kg (2 x 2 kg each)	1417304
Pair 5 kg (2 x 2.5 kg each)	1417305
Pair 6 kg (2 x 3 kg each)	1417306
Pair 7 kg (2 x 3.5 kg each)	1417307
Pair 8 kg (2 x 4 kg each)	1417308

NEOPRENE ANKLE AND WRIST WEIGHTS

Neoprene covering. Hook and loop fasteners. Colour: BLACK.

MODELS	CODE
Pair 1 kg (2 x 0.5 kg each)	**1417311**
Pair 2 kg (2 x 1 kg each)	1417312
Pair 3 kg (2 x 1.5 kg each)	1417313
Pair 4 kg (2 x 2 kg each)	1417314
Pair 5 kg (2 x 2.5 kg each)	1417315

CUSHION FISIOTECH

CUSHIONS

Cushions available in different shapes and sizes.
Polyurethane foam padding density: 30 kg/m3, Italian fire resistance rating: 1 IM. Washable leatherette upholstery, Italian fire resistance rating: 1 IM.

ROLL

MODELS	COLOURS	CODE
L 20 x Ø 8 cm	assorted colours	1415101
L 35 x Ø 15 cm	assorted colours	1415102
L 50 x Ø 15 cm	assorted colours	1415103
L 30 x Ø 30 cm	assorted colours	1415104
L 50 x Ø 25 cm	assorted colours	1415105
L 100 x Ø 25 cm	assorted colours	1415106
L 100 x Ø 40 cm	assorted colours	1415107
L 60 x Ø 30 cm	assorted colours	1415108
L 120 x Ø 30 cm	assorted colours	1415109

HALF-ROLL

MODELS	COLOURS	CODE
L 30 x Ø 16 x h 8 cm	assorted colours	1415201
L 50 x Ø 25 x h 12,5 cm	assorted colours	1415202
L 60 x Ø 30 x h 15 cm	assorted colours	1415203

BLOCK CUSHION FISIOTECH

CUSHIONS

Cushions available in different shapes and sizes.
Polyurethane foam padding density: 30 kg/m3, Italian fire resistance rating: 1 IM. Washable leatherette upholstery, Italian fire resistance rating: 1 IM.

CUBE

MODELS	COLOURS	CODE
L 40 x P 40 x h 40 cm	assorted colours	1415301
L 30 x P 30 x h 30 cm	assorted colours	1415302

PARALLELEPIPED

MODELS	COLOURS	CODE
L 40 x P 40 x h 40 cm	assorted colours	1415301
L 30 x P 30 x h 30 cm	assorted colours	1415302

BALL BATH EXERSICE FISIOTECH

THERASENSORY

The Therasensory ball presents small bumps on its whole surface. This particular surface amplifies the sensory perceptions and provides, at the same time, a pleasant massage, by fostering blood circulation. Suitable for functional recovery and rehabilitation gymnastics.

SPECIFICATIONS	
Recommended max load	**120 kg**
Tested max load	300 kg

MODELS	COLOURS	CODE
Ø 100 cm	**Red**	**1411081**
Ø 65 cm	Green	1411082

PHYSIO ROLL

Physio Roll was born from joining two balls together and creating an equipment with a great use range and a higher stability compared to balls. It used in the physiotherapy sector and it is ideal for those who have coordination and balance difficulties, for the disabled, for the elderly, and for nursery schools.

SPECIFICATIONS	
Recommended max load	**120 kg**
Tested max load	300 kg

MODELS	COLOURS	CODE
Ø 30 cm - L 50 cm	**Blue**	**1411071**
Ø 40 cm - L 65 cm	Red	1411072
Ø 55 cm - L 90 cm	Yellow	1411073
Ø 70 cm - L 115 cm	Blue	1411074
Ø 85 cm - L 130 cm	Red	1411075

EXERCISE THERAPY FISIOTECH

ELECTROMAGNETIC EXERCISE BIKE - Code 1811020
Electromagnetic home fitness exercise bike

SPECIFICATIONS	
Resistance system	Electromagnetic power 8V
Tension levels	16 levels electronically tension
Flywheel	12 kg
Display	1 colour window LCD
Functions	Time / speed / distance / calories / pulse / RPM / program diagram / effort / watt
Programs	Manual – 10 pre set (16 levels)
Heart Rate Monitoring	Hand pulse + Wireless receiver
Heart rate chest belt	Optional
Handlebar	Ergonomic, multiple handles, adjustable
Seat	Graduated compression, horizontally and vertically adjustable
Crank arms	3 pieces
Maximum User Weight	130 kg
Distance seat-pedal	Min. 68 cm – Max 95 cm
Net Weight	29 kg
Gross Weight	33 kg
Set-Up Sizes	103 x 52 x 135 cm (LxWxH)
Package Dimensions	86 x 32 x 64,5 cm (LxWxH)
Transportation Wheels	Yes
Certifications	CE, ROHS, EN957

GYMNASTIC ROLL FORM FISIOTECH

FIT-BALL ROLLER - CODE 1418121

The Fit-Ball Roller is an effective alternative to hard cylinders. This multi-purpose tool allows performing a wide range of exercises, which vary from abdominal strengthening to stretching, relaxation and Pilates. Inflatable according to the desired hardness.

Code 1418121

SPECIFICATIONS	
Recommended max load	**120 kg**
Tested max load	200 kg
Diameter	18 cm
Length	75 cm

FOAM-ROLL

Instrument for physiotherapy exercises used to improve the muscular flexibility and for relaxing self-massages to relieve muscular tension and favour mental and physical wellbeing.

MODELS	COLOURS	CODE
Cylinder	∅ 15 cm - L 90 cm	1418131
Small cylinder	∅ 15 cm - L 45 cm	1418132

NEEDLE PUMP - CODE 1411160

With flexible extension.

Code 1411160

MAT THERAPY FISIOTECH

FOLDABLE MAT - COD. 1414021

Foldable mat for floor exercises.
PVC upholstery.
Colour: BLUE Dimensions: 180 x 60 x 4 cm

MAT - COD. 1414022

Mat that can be easily rolled up.
Colour: GREY Dimensions: 180 x 50 x 1 cm

Code 1414022

FOLDABLE MAT - COD. 1414023

Foldable mat for floor exercises.
Colour: GREY Dimensions: 180 x 50 x 1 cm

THERA BAND FISIOTECH

ROLL 20 MT X 5 CM

Polyurethane latex free elastic band rolls. Thanks to their dimensions, they are suitable for low- impact exercises and for use in pools, as they do tolerate chlorine.
Dimensions 20 mt x 5 cm.

MODELS	COLOURS	CODE
Extra light	Red	1417041
Light	Yellow	1417042
Medium	Blue	1417043
Heavy	Green	1417044

POWER LOOP

Power loop is a large elastic loop with a high resistance. It is ideal for functional training, fitness, physical therapy.
Thickness: 0,45 cm..

MODELS	DIMENSIONS	COLOURS	CODE
Extra light	104 x 1,25 cm	Red	1417051
Light	104 x 1,90 cm	Black	1417052
Medium	104 x 2,85 cm	Yellow	1417053
Strong	104 x 4,45 cm	Green	1417054
Extra strong	104 x 6,35 cm	Blue	1417055
Super extra strong	104 x 8,25 cm	Orange	1417056

TUBING 10 MT

Polyurethane, latex free high resistance tubing bands. They are a simple and practical tool for muscle toning and strengthening, for rehabilitation and stretching.
Dimensions: 10 mt.

MODELS	COLOURS	CODE
Extra light	Red	1417071
Light	Yellow	1417072
Medium	Violet	1417073
Heavy	Black	1417074

TUBING HANDLES - CODE 1417112

WALL BAR FISIOTECH

WOODEN WALL BARS
Clear-varnished beechwood wall bars with oval rungs.
One of the two upper rungs is placed inwards while the other outwards to carry out suspension exercises. With zinc-plated steel joints to fix the wall bar to the wall.

SPECIFICATIONS	
Height	240 cm
Maximum load	125 kg

MODELS	WIDTH	CODE
Single section	90 cm	1412030
Double section	180 cm	1412040

EXERCISE THERAPY FISIOTECH

EASY ACCESS EXERCISE BIKE – Code 1811010
Magnetic home fitness exercise bike.

SPECIFICATIONS	
Resistance system	Magnetic
Tension levels	8 levels manual tension
Flywheel	10 kg
Display	1 window lcd
Functions	Time / speed / distance / calories / pulse / odometer
Programs	No
Heart Rate Monitoring	Hand pulse
Handlebar	Ergonomic, multiple handles, adjustable
Seat	Graduated compression, horizontally and vertically adjustable
Crank arms	3 pieces
Maximum User Weight	120 kg
Distance seat-pedal	Min. 69 cm – Max 96 cm
Net Weight	28 kg
Gross Weight	31 kg
Set-Up Sizes	105 x 51 x 132 cm (LxWxH)
Package Dimensions	90 x 26 x 64 cm (LxWxH)
Transportation Wheels	Yes
Certifications	CE, ROHS, EN957

GYM MAT FISIOTECH

AIREX®
GYM MATS

WALL BAR FISIOTECH

WALL BARS
Wall bars with oval clear-varnished beechwood rungs.
Powder-coated steel uprights with bars to fix the product to the wall.
One of the two upper rungs of the 14-rung wall bar is placed inwards while the other outwards to carry out suspension exercises.

SPECIFICATIONS	
Height	240 cm
Width	90 cm
Maximum load	125 kg

MODELS	CODE
Single section 13 rungs	1412010
Single section 14 rungs	1412020

Single section 13 rungs Code 1412010

Single section 14 rungs Code 1412020

Detail 14 rungs model

MATRESS FISIOTECH

FOAM MATTRESS

Blue PVC-covered compressed foam mattress. 600 gr/m2, antibacterial, anti-dust mite, fire- resistant class 2.
Removable upholstery, with zip and handles for easy transportation.
Colour: BLUE.

MODELS	DENSITY	CODE
200 x 100 x 5 cm	30 kg/m³	1414011
200 x 100 x 10 cm	16 kg/m³	1414012

AGGLOMERATED FOAM MATTRESS - COD. 1414013

Agglomerated foam mattress with anti-mould antibacterial class 2 fire-resistant covering with non-slip bottom. Removable upholstery, with zip and handles for easy transportation. Suitable for gym exercises.
Colour: BLUE.

SPECIFICATIONS	
Density	80 kg / m3
Dimensions	200 x 100 x 5 cm

Code 1414013

MAT GOLD® MATTRESS

Exclusive polyurethane integral skin foam formulation (without HFC and CFC) with ODP (Ozone Depletion Potential) blowing agents. The completely open cell structure gives the mat excellent shock absorption features, allowing the normal airflow from every single layer of the product, the homogeneity in thickness and density in any spot of the mat. The special skin on the top and on the bottom lends further mechanical resistance.
These mats guarantee great resistance to abrasions and an excellent grip.
Colour: BLUE.

MODELS	DENSITY	CODE
200 x 100 x 3 cm	PK14	1414031
200 x 100 x 4 cm	PK16	1414032
200 x 100 x 5 cm	PK20	1414033

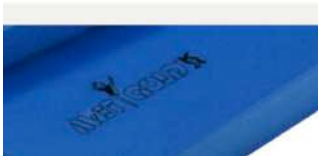

HORIZONTAL MAT TROLLEY - COD. 1414901

Varnished steel structure with four rubber swivel castors diameter 100 mm. Dimensions 200x100 cm.

THERABAD ROLL FISIOTECH

ELASTIC BANDS

Elastic bands are simple and practical tools for fitness, pilates, muscle toning and strengthening, rehabilitation and stretching.
Dimensions: 120 x 14,5 cm

MODELS	COLOURS	CODE
Extra light	Yellow	1417011
Light	Red	1417012
Medium	Green	1417013
Heavy	Blue	1417014

25MT-LONG ELASTIC BANDS

Dimensions: 25 mt x 14,5 cm.

MODELS	COLOURS	CODE
Extra light	Yellow	1417021
Light	Red	1417022
Medium	Green	1417023
Heavy	Blue	1417024

ELASTIC BANDS WITH HANDLES

Polyurethane latex free elastic band rolls. Thanks to their dimensions, they are suitable for low- impact exercises and for use in pools, as they do tolerate chlorine.
Dimensions: 160 x 5 cm.

MODELS	COLOURS	CODE
Extra light	Red	1417031
Light	Yellow	1417032
Medium	Blue	1417033
Heavy	Green	1417034

ELASTIC BAND HANDLES - CODE 1417111

BALLBATH EXERCISE FERROX

BOBATH BALLS, MEDICINE BALLS

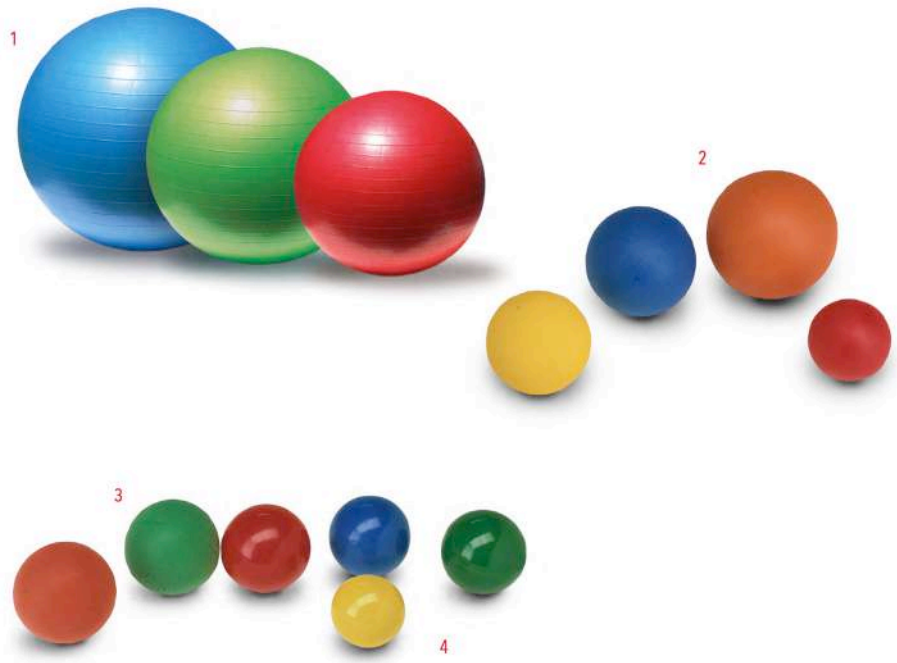

(1) PVC BOBATH BALLS
- **Medical device**

Art. 260450-0 cm 45
Art. 260460-0 cm 55
Art. 260470-0 cm 65
Art. 260471-0 cm 85
Art. 260472-0 cm 75
Art. 260480-0 cm 95
Art. 260490-0 cm 120

(2) "MEDICINE BALL" **
Art. 111551-red-weight kg 1, Ø cm 12
Art. 111571 - giallo - weight kg 2,0 cm 15
Art. 111581-blu-weight kg 3, Ø cm 17
Art. 111601 - rosso-weight kg 5, 0 cm 23

(3) PVC BALLS FOR RHYTHMIC GYMNASTICS **
Art. 111441 - weight gr 130, Ø cm 16
Art. 111443-weight gr 280, Ø cm 18
Art. 111480-weight gr 400, Ø cm 19

(4) Art. 111481 - FOAM RUBBER BALLS **
for RHYTHMIC GYMNASTICS, Ø 20 cm

GYM MAT FISIOTECH

CORONELLA 185

AIREX® CORONELLA is suitable for: pilates, fitness, yoga, physiotherapy and rehabilitation, and club sport.

MODELS	COLOURS	WEIGHT	CODE
185 x 60 x 1,5 cm	Blue	2,2 kg	1414141
185 x 60 x 1,5 cm	Red	2,2 kg	1414142
185 x 60 x 1,5 cm	Slate	2,2 kg	1414143

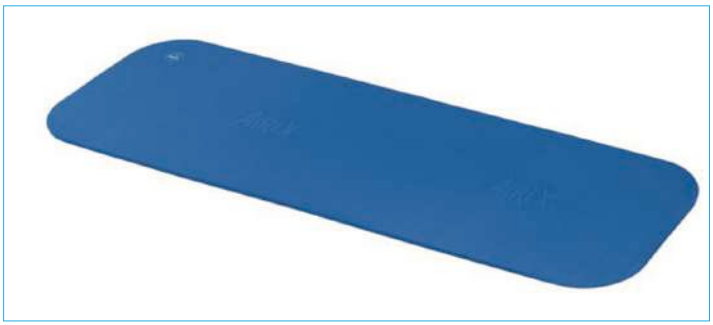

Code 1414141

Code 1414142

Code 1414143

CORONELLA 200

AIREX® CORONELLA is suitable for: pilates, fitness, yoga, physiotherapy and rehabilitation, and club sport.

MODELS	COLOURS	WEIGHT	CODE
200 x 60 x 1,5 cm	Slate	2,4 kg	1414144
200 x 60 x 1,5 cm	Blue	2,4 kg	1414145
200 x 60 x 1,5 cm	Red	2,4 kg	1414146

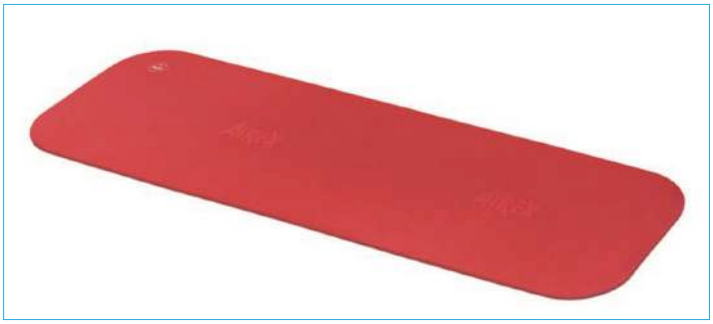

Code 1414144

Code 1414145

Code 1414146

PULLER ACCESSORY THERAPY FISIOTECH

The accessories on this page are all included in the KIT FOR PULLEY THERAPY – Code 1317100. You can also buy them separately.

Code 1317113
HANDLE

Code 1317114
PULLEY

Code 1317115
SNAP HOOK

Code 1316052
ANKLE STRAP WITH RING

Code 1317116
S HOOK

Code 1316031
0,5 kg sandbag with eyelet

Code 1316032
1 kg sandbag with eyelet

Code 1316033
2 kg sandbag with eyelet

Code 1316034
3 kg sandbag with eyelet

Code 1316035
4 kg sandbag with eyelet

Code 1316036
5 kg sandbag with eyelet

PULLER SYSTEM FISIOTECH

DOUBLE EXERCISE PULLEY WITH WALL BAR – Code 1315030
Powder-coated steel structure with chrome-plated sliding parts. It is made of two lateral exercise pulleys with a central wall bar with varnished steel uprights and 13 wooden rungs. The working load can be adjusted up to 8 kg.

Double exercise pulley with wall bar Code 1315030

SPECIFICATIONS	
Height	240 cm
Width	145 cm
Depth	28 cm

CAST IRON WEIGHT – Code 1316041
Varnished cast iron weight With hole diameter 25 mm.

Code 1316041

BALL BATH FISIOTECH

FOAM BALL – Cod. 1411031
Soft, light, and colourful foam ball ideal for muscular strength exercises, floor exercises and for lumbar support.
Assorted colours Dimensions: Ø 20 cm Weight: 0,150 kg

SOFTGYM – Cod. 1411091
Soft, light, and resistant ball, which allows performing a wide range of exercises that vary from muscle strengthening to low-impact exercises. Foldable, so that it can be brought everywhere. Thanks to the straw included in the package, it is easily inflatable.
Colours: RED Dimensions: Ø 23 cm

SPECIFICATIONS	
Recommended max load	80 kg
Tested max load	100 kg

MEDICINE BALLS
Medicine balls are filled exclusively with water. Their surface allows achieving a good grip.

SPECIFICATIONS		
MODELS	COLOURS	CODE
Ø 10 cm – 500 gr	Green	1411051
Ø 12 cm – 1 kg	Red	1411052
Ø 15 cm – 2 kg	Yellow	1411053
Ø 17 cm – 3 kg	Blue	1411054
Ø 20 cm – 4 kg	Magenta	1411055
Ø 23 cm – 5 kg	Orange	1411056

EXERCISE THERAPY FISIOTECH

RECUMBENT EXERCISE BIKE – Code 1811030
Magnetic home fitness exercise bike.

SPECIFICATIONS	
Resistance system	Magnetic
Tension levels	8 levels manual tension
Flywheel	9 kg
Display	1 window lcd
Functions	Time / speed / distance / calories / pulse
Programs	No
Heart rate monitoring	Hand pulse
Heart rate chest belt	No
Handlebar	Ergonomic, antislip
Seat	High absorption, horizontally adjustable, breathable backrest
Crank arms	3 pcs
Maximum User Weight	135 kg
Net Weight	43 kg
Gross Weight	49 kg
Set-Up Sizes	152 x 60,5 x 125,5 cm (LxWxH)
Package Dimensions	150 x 28 x 69 cm (LxWxH)
Transportation Wheels	Yes
Certifications	CE, ROHS, EN957

GMY MAT FISIOTECH

CORONA
AIREX® CORONA is suitable for: pilates, fitness, yoga, physiotherapy and rehabilitation and club sport.

SPECIFICATIONS			
MODELS	COLOURS	WEIGHT	CODE
185 x 100 x 1,5 cm	Blue	3,8 kg	1414151
185 x 100 x 1,5 cm	Red	3,8 kg	1414152
185 x 100 x 1,5 cm	Slate	3,8 kg	1414153

Code 1414151

Code 1414152

Code 1414153

ATLAS
AIREX® ATLAS is suitable for: fitness, physiotherapy and rehabilitation and club sport.

SPECIFICATIONS			
MODELS	COLOURS	WEIGHT	CODE
200 x 125 x 1,5 cm	Red	5,5 kg	1414161
200 x 125 x 1,5 cm	Waterblue	5,5 kg	1414162

Code 1414144

Code 1414145

GYMNASTIC FISIOTECH

SKIPPING ROPE – Code 1417501
Cotton skipping rope for rhythmic gymnastics. The central section is thicker due to a soft plastic covering. With wooden handles.
Length: 280 cm.

Code 1417501

SKIPPING ROPE – Code 1417502
Coloured cotton skipping rope for rhythmic gymnastics with lead core.
Length: 280 cm.

Code 1417502

MINI TRAMPOLINE – Code 1418111
Mini trampoline.

SPECIFICATIONS	
Max weight	100 kg
Diameter	98 cm
Height	20 cm

Code 1418621

"BAUMANN" SUPPORTS
Pair of "Baumann" supports, made of clear varnished hardwood.

MODELS	DIMENSIONS	CODE
Medium	168 x 92 x 65 mm	1416081
Small	150 x 88 x 65 mm	1416082

"BAUMANN" BLOCKS – Code 1416083
Pair of "Baumann" blocks, made of clear varnished hardwood.
Dimensions: 140 x 65 x 65 mm.

Code 1416083

MAGIC CIRCLE – Code 1417621
A ring that allows performing several trunk, leg and abdomen exercises. Suitable for arm, back,
chest, internal and external thigh and calf toning. With ergonomic handles.

Colour: BLACK Dimensions: Ø 38 cm

Code 1417621

THERA BAND FISIOTECH

TUBING BANDS WITH HANDLES

Polyurethane, latex free high resistance tubing bands. They are a simple and practical tool for muscle toning and strengthening, for rehabilitation and stretching.
Dimensions: 160 cm.

MODELS	DIMENSIONS	CODE
Extra light	Red	1417061
Light	Yellow	1417062
Medium	Violet	1417063
Heavy	Black	1417064

EIGHT-SHAPED TUBING BANDS

Eight-shaped high resistance tubing bands with handles. Polyurethane, latex free elastics, ideal for functional training, fitness, physical therapy.

MODELS	DIMENSIONS	CODE
Light	Red	1417101
Medium	Yellow	1417102
Strong	Violet	1417103
Extra strong	Green	1417104

TUBING BAND RINGS

Polyurethane, latex free high resistance tubing band rings. They are a simple and practical tool for muscle toning and strengthening, for rehabilitation and stretching.

MODELS	DIMENSIONS	CODE
Light	Red	1417081
Medium	Yellow	1417082
Strong	Violet	1417083
Extra strong	Black	1417084

TUBING BAND RINGS WITH HANDLES

Polyurethane, latex free high resistance tubing band rings with handles ideal for functional training, fitness, physical therapy.

MODELS	DIMENSIONS	CODE
Light	Red	1417091
Medium	Yellow	1417092
Strong	Violet	1417093
Extra strong	Black	1417094

WEDG CUSHION FISIOTECH

CUSHIONS
Cushions available in different shapes and sizes.
Polyurethane foam padding density: 30 kg/m3, Italian fire resistance rating: 1 IM. Washable leatherette upholstery, Italian fire resistance rating: 1 IM.

WEDGE

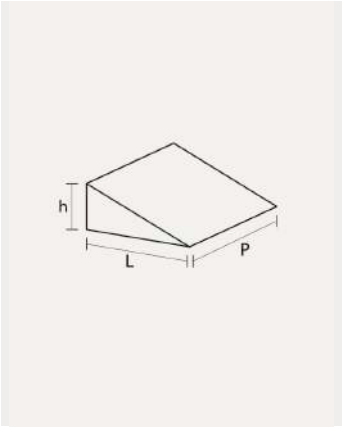

MODELS	DIMENSIONS	CODE
L 35 x P 35 x h 10 cm	assorted colours	1415402
L 25 x P 25 x h 10 cm	assorted colours	1415403
L 45 x P 60 x h 15 cm	assorted colours	1415404
L 60 x P 60 x h 15 cm	assorted colours	1415405
L 60 x P 60 x h 30 cm	assorted colours	1415406
L 45 x P 45 x h 15 cm	assorted colours	1415408

CUT-OUT WEDGE

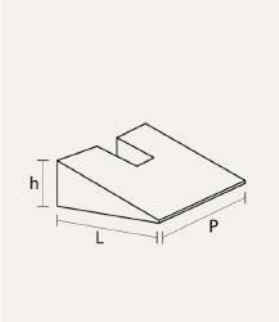

MODELS	DIMENSIONS	CODE
L 40 x P 34 x h 9 cm	assorted colours	1415407

WALL BAR FISIOTECH

CURVED BACK SUPPORT – Code 1412500
Curved back support for wall bars.
Padded, upholstered in black washable fire-resistant leatherette.
Colour: BLACK.

MODELS	DIMENSIONS
Height	65 cm
Width	40 cm
Depth	18 cm

WALL BAR BOARD – Code 1412510
Wall bar board. Padded board upholstered in washable fire-resistant leatherette. With feet-holding belt.
Colour: BLACK.

MODELS	DIMENSIONS
Height	180 cm
Width	30 cm

SUSPENSION FRAME – Code 1412520
Suspension frame for wall bar. Zinc-chromed steel frame with grid for hooks. Useful for cervical traction and pulley therapy.

MODELS	DIMENSIONS
Height	40 cm
Width	64 cm
Depth	87 cm

BALL BATH FISIOTECH

RHYTHMIC BALLS
Balls suitable for training in rhythmic gymnastics.

MODELS	COLOURS	CODE
Max Ø 16 cm - 280 gr	Assorted colours	1411061
Max Ø 18,5 cm - 420 gr	Blue	1411062

SENSY-BALLS
Soft and pleasant to touch. Thanks to their bumps, they provide a healthy stimulation of the pressure points. The three available sizes allow a wide application range. The smaller version is particularly suitable for massage therapy and manipulative exercises, whereas the two larger versions are ideal for low-impact exercises. The three sizes are all suitable for reflexology and relaxing techniques.

TECHNICAL SPECIFICATIONS	
Recommended max load Ø 20 – Ø 28	80 kg
Tested max load	100 kg

MODELS	COLOURS	CODE
Ø 10 cm – 80 gr Pack of two	Yellow	1411101
Ø 20 cm – 330 gr	Yellow	1411102
Ø 28 cm – 400 gr	Yellow	1411103

BLOCK WEDG FISIOTECH

CUSHIONS
Cushions available in different shapes and sizes.
Polyurethane foam padding density: 30 kg/m3, Italian fire resistance rating: 1 IM. Washable leatherette upholstery, Italian fire resistance rating: 1 IM.

TRAPEZOID

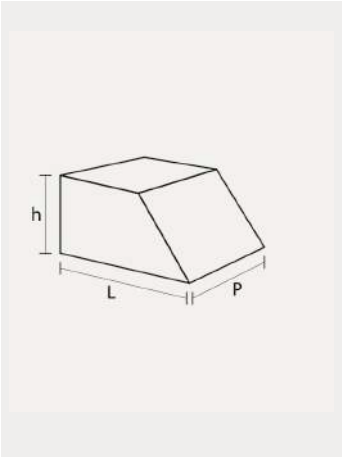

MODELS	DIMENSIONS	CODE
MODELS	COLOURS	CODE
L 50 x P 40 x h 30 cm	assorted colours	1415601
L 50 x P 40 x h 30-16 cm	assorted colours	1415602

MOVIN'SIT - Code 1417141
Movin' Sit is an inflatable dynamic cushion that activates the trunk muscles and supports the backbone. Its shape was carefully studied in order to promote good posture by facilitating the search for a balanced pelvic position.

TECHNICAL SPECIFICATIONS	
Recommended max load	120 kg
Tested max load	200 kg

MODELS	COLOURS	CODE
L 36 x P 36 x h 7 cm	Blue	1417141

EXERCISE THERAPY FISIOTECH

TREADMILL – Code 1812010
Home fitness treadmill.

SPECIFICATIONS	
Motor	2,5 continuous HP / 3,5 peak HP
Speed	1,0-18 km/h with 0,1 km/h increase - 3 speed quick selection
Incline	Power incline / 18 levels / 3 incline quick selection
Display	1 LCD window 123 x 67 mm, blue backlight
Functions	Time / distance / speed / incline / calories / pulse / steps
Programs	Manual / 25 pre-set with speed and incline variation / 3 customisable / 3 HRC / body fat test / program pause function
Heart rate monitoring	Hand pulse + wireless receiver
Heart rate chest belt	standard
Running deck	Folding, easy unfolding system with hydraulic piston
Running surface/cushioning	46 x 140 cm – 4 air shox + 4 absorbing cushions
Roller size	46 mm front, 42 mm rear
Running belt	Non-slip with double-weave cotton canvas
Handrail buttons	Incline / speed, slip grip
Accessories	Bluetooth speaker + tablet support + 2 bottle holders
Transportation wheels	Yes
All-In-One assembly	No
Set-Up sizes	180 x 75 x 138 cm (LxWxH)
Folded size	113 x 75 x 150 cm (LxWxH)
Package dimensions	76,5 x 33,5 x 174 cm (LxWxH)
Maximum user weight	120 kg
Net weight	63 kg
Gross weight	71 kg
Certifications	CE, ROHS, EN957

GYM MAT FISIOTECH

HERCULES
AIREX® HERCULES is suitable for: physiotherapy and rehabilitation and club sport.

SPECIFICATIONS			
MODELS	COLOURS	WEIGHT	CODE
200 x 100 x 2,5 cm	Blue	6,6 kg	1414171
200 x 100 x 2,5 cm	Waterblue	6,6 kg	1414172

Code 1414172

Code 1414171

FITLINE 180
AIREX® FITLINE 180 is suitable for: fitness, pilates, yoga, and club sport.

SPECIFICATIONS			
MODELS	COLOURS	WEIGHT	CODE
200 x 58 x 1 cm	Waterblue	1,5 kg	1414181
200 x 58 x 1 cm	Charcoal	1,5 kg	1414182
200 x 58 x 1 cm	Kiwi	1,5 kg	1414183
200 x 58 x 1 cm	Pink	1,5 kg	1414184

Code 1414181

Code 1414182

Code 1414183

Code 1414184

GYMNASTIC FISIOTECH

WOODEN TROLLEY – Code 1418611
Clear vanished solid wood trolley with three shelves, with castors. Dimensions: 92 x 68 x 95 cm.

PSYCHOMOTOR KIT – Code 1418621
A combination of instruments such as sticks, cones, hoops, balls, which qualified staff uses to create psychomotor courses or motor programmes in gyms.

Nº 01 wooden stick length 70 cm
Nº 01 wooden stick length 80 cm
Nº 01 wooden stick length 90 cm
Nº 01 pack of PVC sticks length 100 cm
Nº 04 cones with three holes and four splits, height 30 cm Nº 02 pairs of small wooden clubs
Nº 01 pair of medium supports
Nº 01 pair of small supports
Nº 01 pair of blocks
Nº 02 flat-section nylon hoops 60 cm
Nº 02 flat-section nylon hoops 70 cm
Nº 02 flat-section nylon hoops 80 cm
Nº 04 skipping ropes with handles and thicker central section Nº 04 skipping ropes with lead core, assorted colours
Nº 04 420 gr balls for rythmic gymnastics
Nº 01 2 kg medicine balls
Nº 01 pair ankle/wrist weights 1 kg (2x 0,5 kg)
Nº 02 psychomotor training sandbags
Nº 02 psychomotor training PVC bags
Nº 02 green elastic bands (medium) 120x14,5 cm Nº 01 roll cushion dimensions 35x15 cm
Nº 01 roll cushion dimensions 50x25 cm

BALL BATH FISIOTECH

REFLEX MASSAGE BALLS
The Reflexball reflex massage balls are ideal for massage, reflexology, hand therapy and relaxation exercises. Pack of two.

MODELS	COLOURS	CODE
Ø 8 cm - 85 gr	Green	1411111
Ø 9 cm - 120 gr	Blue	1411112
Ø 10 cm - 150 gr	Green	1411113

THERA FREEBALLS HAND - Code 1411131
Small balls that, thanks to their flexibility, allow performing specific exercises for hand rehabilitation.
Thera Freeballs Hand are ideal to develop finger mobility strengthening finger muscles, too. The set is made of two balls with different diameter.
Colours: RED and YELLOW Dimensions: 1 pc Ø 50 mm + 1 pc Ø 40 mm

ACTIV ROLL - Code 1411121
A small roller with soft bumps for a comfortable massage. Activ Roll fosters blood circulation for a full-body benefit.
Used for foot and back massage, reflexology and skin-sensitisation exercises. The product is inflatable with a needle pump in order to achieve the desired level of inflation.
Colours: DARK GREY Dimensions: Ø 7,5 cm - L 15 cm

EXERCISE THERAPY FISIOTECH

STEPPER – Code 1813010
Home fitness stepper.

SPECIFICATIONS	
Resistance	Indipendent hydraulic pistons – 12 levels
Foldable	Yes
Display	1 LCD window
Functions	Time / step / step/minute / calories
Handlebar	Ergonomic, multiform
Set-Up Sizes	75 x 41.5 x 131 cm (LxWxH)
Folded Size	41.5 x 17 x 98 cm (LxWxH)
Package Dimensions	17 x 41.5 x 98 cm (LxWxH)
Maximum User Weight	100 kg
Net Weight	19 kg
Gross Weight	20 kg

GYM MAT FISIOTECH

CORONELLA 120 – Code 1414191
AIREX® CORONELLA 120 is suitable for: fitness and club sport.

MODELS	COLOURS	WEIGHT	CODE
120 x 60 x 1,5 cm	Blue	1,4 kg	1414191

FITLINE 140 – Code 1414201
AIREX® FITLINE 140 is suitable for: fitness, pilates, yoga, and club sport.

MODELS	COLOURS	WEIGHT	CODE
140 x 58 x 1 cm	Waterblue	1,2 kg	1414201

PILATES 190 – Code 1414212
AIREX® PILATES 190 is suitable for: fitness, pilates, yoga.

MODELS	COLOURS	WEIGHT	CODE
190 x 60 x 0,8 cm	Anthracite	1,4 kg	1414212

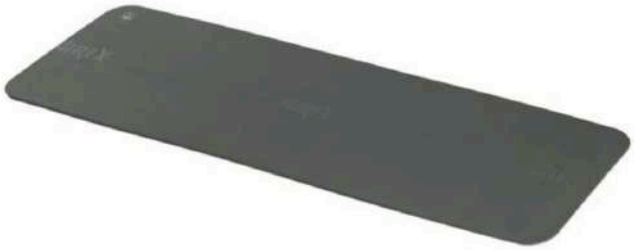

BALLBATH ACCESSORY FISIOTECH

BALL SUPPORT "S" - Code 1411141
For balls Ø 45-55 cm.

BALL SUPPORT "M" - Code 1411151
For balls Ø 65-75 cm.

NEEDLE PUMP - Code 1411160
With flexible extension.

MANUAL PUMP - Code 1411161
Ideal for medium- or big-sized balls.

EXERCISE THERAPY FISIOTECH

ROWING MACHINE – Code 1814010
Home fitness rowing machine.

SPECIFICATIONS	
Resistance system	Magnetic
Resistance	Manual with handle on eight levels
Foldable	Yes
Display	1 LCD window
Functions	Time / strokes / distance / calories / total strokes
Flywheel	6 kg
Set-Up sizes	162 x 55 x 87 cm (LxWxH)
Folded size	87 x 55 x 162 cm (LxWxH)
Package dimensions	142 x 53 x 20,5 cm (LxWxH)
Maximum user weight	100 kg
Net weight	21,5 kg
Gross weight	25 kg

GYM MAT ACCESSORY FISIOTECH

SPECIFICATIONS	
Type 15 eyelets suitable for: AIREX® CORONELLA	1414301
Type 10 eyelets suitable for: AIREX® FITLINE140/180	1414302
Type 8 eyelets suitable for: AIREX® PILATES 190	1414303

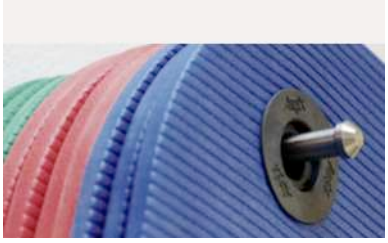

WALL SUPPORT - Code 1414311
Wall support for AIREX® mats with eyelet.
Suitable for: CORONELLA – FITLINE140/180 – PILATES 190

WALL SUPPORT - Code 1414312
Wall support for AIREX® mats without eyelet.
Suitable for: CORONELLA – FITLINE 140/180

WALL SUPPORT - Code 1414313
Wall support for AIREX® mats without eyelet.
Suitable for: CORONA – HERCULES

HAND EXERCISE FISIOTECH

HANDGRIPS – Code 1315110
Instrument for hand and wrist rehabilitation.
Sponge grip. Pack of two.

Code 1315110

FOAM BALLS – Code 1315120
Soft, light and colorful foam ball, ideal for functional rehabilitation of fingers and hands.
Dimensions ∅ 7 cm.

Code 1315120

WOODEN SPHERES – Code 1315130
Wooden spheres, ideal for functional rehabilitation of fingers and hands. Set of four pieces. Assorted colours
Dimensions ∅ 6 cm.

Code 1315130

WOODEN DISKS – Code 1315140
Colorful wooden disks, ideal for functional rehabilitation of fingers and hands. Set of four pieces. Assorted colours
Dimensions ∅ 6x3 cm.

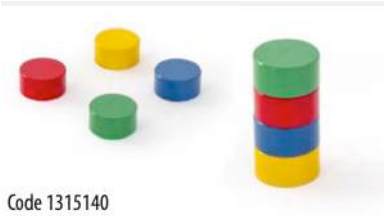

Code 1315140

GAS PEDAL FOOTBOARD – Code 1315150
Made of varnished wood, with a leatherette soft wedge. Suitable for ankle and foot exercises.

SPECIFICATIONS	
Length	24 cm
Width	14 cm
Height	15 cm

Code 1315150

HAND EXERCISE STRENGTH THERAPY FISIOTECH

FISIOTEK LT-5R - Code 1314060
Fisiotek LT-5R is used for the passive rehabilitation of the shoulder. It is used in rehabilitation to passively restore joint movement in both surgically and non-surgically treated medical conditions. Adjustable in height.

SPECIFICATIONS	
MOVEMENTS CARRIED OUT	
Elevation in flexion range	0° ÷ 180°
Elevation in abduction	complete physiological range
Internal-external rotation range	90°÷0° 90°
PROGRAMMABLE FUNCTIONS	
Speed	2° ÷ 4,5°/sec
Range of movement	fast electromechanical limit setting

ARM SUPPORT - Code 1314070
Arm support for internal-external rotation movement.

Code 1314070

BATTERIES PACK AND BATTERY CHARGER - Code 1314080

Code 1314080

HAND EXERCISE FISIOTECH

HAND REHABILITATION LADDER – Code 1315070
Wooden ladder for hand rehabilitation exercises.

SPECIFICATIONS	
Width	30 cm
Height	60 cm

Code 1315070

SPIRALS – WORM SCREW
Vertical spiral for hand and arm torsion, pronation and supination. Horizontal spiral for hand and forearm pronation and supination. Worm screw for hand rotation.

SPECIFICATIONS	
Wooden base length	40 cm
Wooden base width	17 cm
Vertical spiral height	30 cm
Horizontal spiral height	25 cm
Worm screw height	20 cm

MODELS	CODE
Vertical spiral	1315080
Horizontal spiral	1315090
Worm screw	1315100

Code 1315080

Code 1315090

Code 1315100

ERGOTHERAPY BOARD – Code 1315060
Upper limb rehabilitation board. Wall mountable, with nine elements simulating everyday activities like:

1. screwing/unscrewing a light bulb
2. turning on and off a switch
3. plugging/unplugging
4. sliding a bolt lock
5. rotating a latch
6. sliding a sliding lock
7. hanging a door chain
8. opening/closing a handle
9. opening/closing a handgrip

SPECIFICATIONS	
Length	100 cm
Width	60 cm

Code 1315060

KNEE CPM ACCESSORY FISIOTECH

MOBILE PROGRAMMING KEYBOARD – Code 1314030
With its graphic, user-friendly display, the keyboard makes the equipment fully and simply programmable. The graphic symbols provided are self-explanatory.

Code 1314030

TROLLEY FOR INDOOR – Code 1314040
Easy and functional, it is fitted with nonslip supports for the Fisiotek machine and with a shelf.

Code 1314040

ACCESSORY FOR LIMBS SHORTER THAN 72 CM – Code 1314050
This accessory can only be mounted on FISIOTEK 3000 TS. It can be used in the rehabilitation of limbs between 61 cm and 72 cm in length for a range from 0° to 110°. Using same accessory, you can reach 135° of bending in a limb from 72 to 100 cm in length.

KNEE CPM EXERCISE FISIOTECH

FISIOTEK 3000
FISIOTEK 3000 series for passive rehabilitation of lower limbs. They are intended for use in rehabilitation to restore joint movement in both surgically and non-surgically treated medical conditions.

SPECIFICATIONS	FISIOTEK 3000GS	FISIOTEK 3000TS
Hip and knee mobilization	•	•
Ankle mobilization	–	•
Speed control extension	•	•
Speed control flexion	•	•
Force control	•	•
Working time control	•	•
Extension automatic increase	•	•
Flexion automatic increase	•	•
Pause during extension	•	•
Pause during flexion	•	•
Warm Up cycles	• (*)	• (*)
Use memory card	•	–
Adjustable foot support	•	–
Extension automatic increase limit	•	–
Flexion automatic increase limit	•	–
Repetitions to extension limit	•	–
Repetitions to flexion limit	•	–
Knee range of movement	-10° ÷ 120° (*)	-10° ÷ 110°
Ankle range of movement	-7° ÷ 115°	-7° ÷ 115°
Hip range of movement	–	20° ÷ 0° ÷ 40°
Speed	0,8° ÷ 3,5°/sec.	0,8° ÷ 3,5°/sec.
Force	0 ÷ 40 kg	0 ÷ 40 kg
Weight	9,5 kg	14 kg

MODELS	CODE
FISIOTEK 3000GS	1314010
FISIOTEK 3000TS	1314020

PULLER ACCESSORY THERAPY FISIOTECH

The accessories on this page are all included in the KIT FOR PULLEY THERAPY – Code 1317100. You can also buy them separately.

Code 1317101
HEEL SLING

Code 1317102
PAIR OF ANKLE SLINGS

Code 1317103
LEG SLING

Code 1317104
STRAP

Code 1317105
ANKLE SLING

Code 1317106
LEG SLING STRAP

Code 1317107
ARM SLING STRAP

Code 1317108
HEAD SLING

Code 1317109
PELVIS SLING

Code 1317110
TRUNK SLING

Code 1317111
HEEL SLING WITH RINGS

Code 1317112
20 MT LONG ROPE

PULLER SINGLE AND DOUBLE THERAPY FISIOTECH

SINGLE EXERCISE PULLEY – Code 1315010
Powder-coated steel single structure pulley for rehabilitation therapy. The working load can be adjusted up to 8 kg.

DOUBLE EXERCISE PULLEY – Code 1315020
Powder-coated steel structure with two pulleys with padded backrest upholstered with washable, fire-resistant leatherette. The working load can be adjusted up to 8 kg per side.

Single exercise pulley Code 1315010

Double exercise pulley Code 1315020

SPECIFICATIONS	SINGLE	DOUBLE
Height	195 cm	185 cm
Width	30 cm	102 cm
Depth	28 cm	28 cm

CAST IRON WEIGHT – Code 1316041
Varnished cast iron weight With hole diameter 25 mm.

Code 1316041

PULLER THERAPY FISIOTECH

PULLEY THERAPY CAGE – Code 1317001
Self-supporting steel structure with 5 mm zinc-chromed steel wire mesh forming a 5x5 cm grid. Base with adjustable feet. Cage only.

TECHNICAL SPECIFICATIONS	
Max safe working load	300 kg
Weight of the structure	125 kg

KIT FOR PULLEY THERAPY – Code 1317100
Kit with all the accessories for pulley therapy, slings, handles, weights and other useful tools.

No. 1 heel sling
No. 1 pair of ankle slings No. 1 leg sling
No. 1 strap
No. 1 ankle sling
No. 1 leg sling strap
No. 1 arm sling strap No. 1 head sling
No. 1 pelvis sling
No. 1 trunk sling

No. 1 heel sling
No. 1 20 mt long rope
No. 2 maniglie
No. 8 carrucole
No. 8 moschettoni
No. 2 cavigliere con gancio
No. 6 sandbags (one for each weight available) No. 8 S hooks

SHOULDER WHEEL TRAINING EXERCISE FISIOTECH

SHOULDER WHEEL
Shoulder and elbow rehabilitation instrument. The wheel is adjustable in height. Powder-coated steel structure with chrome-plated sliding part. Resistance mechanism for effort adjustment.

With floor base Code 1315050

Wall-mounted Code 1315040

TECHNICAL SPECIFICATIONS	
Height	160 cm
Width	110 cm
Wall-mounted wheel depth	30 cm
Floor-mounted wheel depth	66 cm
Base of the wheel with base	90 x 60 cm

MODELS	CODE
Wall-mounted	1315040
With floor base	1315050

LIMB STRENGTHERNING EXERCISE FISIOTECH

ARTEMIDE - Code 1314501
Rehabilitation armchair also suitable for upper and lower limb exercise. The barbell can be used on both sides. The weight/difficulty and angle are individually adjustable on various levels thanks to numerical markers. The legs can be blocked with straps.
Powder-coated steel structure. A second tilting bar is available as an optional.

TECHNICAL SPECIFICATIONS	
Length	150 cm
Width	60 cm
Height	70-150 cm
Max working load	130 kg
Backrest adjustment	with gas spring 0° + 90°
Adjustable feet	4
Weights included	14 kg
Upholstery fire-resistance rating	1IM
Padding: density/thickness	40 (kg/m³) / 4 cm
Weight	85 kg
Upholstery colour	blue

PEDAL EXERCISER FOR REHABILITATION - Code 1314520
Pedal exerciser to recover coordination and upper and lower limb muscle tone. Painted steel foldable structure, four non-slip tips, pedals with adjustable foot straps, handle for effort adjustment.

TECHNICAL SPECIFICATIONS	
Dimensions	49 x 37 x 34 cm
Minimum height pedals in horizontal position	27 cm
Maximum height pedals in vertical position	34 cm
Weight	2,3 kg

UPPER LIMBS TRAINING EXERCISE FISIOTECH

✪ PRODUCT PRINCIPLE

The S500 upper limb rehabilitation training system can realize the active movement of the joints of the upper limbs. By adjusting the height of the lifting column and adjusting the length of each joint, the treatment needs of different patients can be met. The device can accurately collect the angle movement changes and grip strength changes of the patient's joints in real time during training, and upload the collected data to the host software in real time. Through software processing, the changes in the patient's angle and grip strength are used for rehabilitation training in coordination with the game. After the training, the patient's training data will be saved to the computer database, and the therapist can view and evaluate the patient's recovery at any time.

✪ FEATURES

1. **Wireless connection**
   The device is connected to the wireless network condition
2. **Evaluation training integration:**
   Evaluation function/training function
3. **Intelligent feedback training**
   Multiple game training, improve patient active participation degree
4. **Weight loss / load training**
5. **Pertinency training**
   Single joint/composite joint training
6. **Custom joint angle name**
7. **Report management**
   Evaluation report/training report

WALL MIRROR FISIOTECH

SCREEN-PRINTED OR PLAIN MIRRORS

4mm-thick mirrors with accident prevention adhesive film. In case the mirror breaks, the fragments will not fall. Mirrors with safety film are mounted on a polystyrene board and a white MDF board. An aluminium frame binds together the components. The mirrors can either be mounted on a wall or on a moving inclination-adjustable trolley.

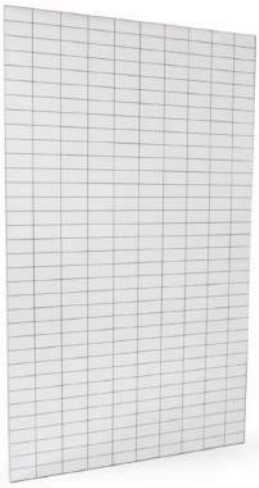

Screen-printed 100 x 200 mirror Code 1413010

Plain 100 x 200 mirror Code 1413020

MODELS	CODE
Screen-printed 100 x 200 h cm. Grid 10 x 5 cm	1413010
Plain 100 x 200 h cm	1413020
Screen-printed 100 x 170 h cm. Grid 10 x 5 cm	1413030
Plain 100 x 170 h cm	1413040

MIRROR TROLLEY

With powder-coated steel frame. When on the trolley, the mirror may be easily tilted and moved thanks to the four useful swivel castors placed on the base.

MODELS	CODE
Trolley for 100x200 cm mirrors	1413500
Trolley for 100x170 cm mirrors	1413510

LGT-5100D

Active Passive Trainer for Upper and Lower Limbs LONGEST RehaMoto

FEATURES

- **Radius Adjustable Crank**
  Cover all heights and leg length; large scale of convenient adjustment.
- **Emergency Stop**
  The emergency stop button is designed to stop operations in case of incidents.
- **Calf Support Kit**
  Hold legs in the neutral position; keep normal movement trajectory; prevent knee injury.
- **Touch Screen**
  8" touch screen; Android system; 270° horizontal rotation & 90° folding.
- **Servo System**
  High performance servo motors ensure smooth operation.
- **Flexible Movement**
  With movable wheels, the device can move to anywhere without much effort.
- **Safety Features**
  Training handle grips to support weak arms; Anti-tip wheelchair hooks, ensuring safe training for wheelchair users;

TECHNICAL SPECIFICATIONS

Dimensions (W×L×H)	700×760×1065mm
Training Modes	5
Standard Weight	45.5kg
Interface	8" touch screen
Rotate Speed	5-60 r/min
Resistance Level	0-24
Spasm Level	OFF,1-10
Spasm⊠Relief Rate	1-5
Timer	1-120 min

HIGHLIGHTS

- 5 Training Modes: Active-Passive, Assistive, Symmetry, Isokinetic, Fine Motor Training
- 8-inch LCD Touchscreen, 270° Horizontal Rotation, 90° Folding
- Suitable for People in Wheelchairs Adjustable Height & Arm Length
- 3 Gaming Types
- Heart Rate Monitor Bluetooth Connection

LIMBS EXERCISE HAOBRO

✪ PRODUCT PRINCIPLE

It can output a given signal according to preset parameters, combine multi-channel and programmed FES with exercise, and control and induce corresponding muscle contraction. At the same time, the device drives the patient or the patient to actively train the extremity to make circular motion along the fixed axis to carry out comprehensive exercise training on the whole limb of upper limb and/or lower limb (including shoulder, elbow, wrist, finger, hip, knee, ankle, and related muscle groups) to enhance the range of motion and muscle strength of patients and induce the reconstruction of brain function.

✪ FEATURES

1. FES functional electrical stimulation
with standard configuration of 8-electrical stimulation, real-time electrical stimulation of the corresponding muscles during exercise to assist muscle contraction, it can also be used independently!

2. Five protection functions
spasm protection, blood oxygen detection, pulse detection, manual emergency stop, and electrode drop alarm.

3. Situational interactio
During training, it can be used with the locomotive game interface to display the left and right balance status in real time to improve the patient's attention.

4. Three treatment modes
with the comprehensive synergistic effect of different modes -- functional electrical stimulation + passive mode + active mode, and seamless switching, it can improve treatment efficiency.

5. Tablet PC control
WINDOWS operating system with real-time display of various training data, including speed, distance, resistance, power, blood oxygen, pulse rate, and time, etc. Patient data can be stored, and user information can be exported.

6. High efficiency
charges for functional electrical stimulation, active and passive training, and pulse oximetry are combinedit can shorten the treatment time and improve the overall benefit.

PRODUCT SPECIFICATION

APM01	APM02	APM05	APM06
Upper limbs active and passive	Active and passive lower limbs	Active and passive of upper and lower limbs	Children's upper and lower limbs active and passive
APM01E	APM02E	APM05E	APM06E
Upper limb active and passive + 8-electrical stim-ulation	Active and passive lower limbs +8-channel electrical stimulation	Active and passive up-per and lower limbs +8-channel electrical stimulation	Children's upper and lower limbs active and passive +8-channel electrical stimulation

CONTINOUS MOBILIZATION HAOBRO

✪ PRODUCT PRINCIPLE

Through the electromechanical structure, the patient's corresponding joints are repeatedly flexed and extended, and the continuous passive exercise can stimulate the joints, making its physiological synovial fluid produce a virtuous cycle, thus reducing joint swelling, and improving the symptoms of joint dysfunction.

✪ HB-GJ1 KNUCKLE/WRIST JOINT TYPE

- The range of finger-wrist movement is 0~90°, which meets the requirements of human finger-wrist joint movement
- The device is equipped with special straps of Haobro, which is more comfortable and convenient for use
- It is equipped with a hexagonal wrench, so the width of the device's hand pole can be adjusted at will to suit different hand sizes of patients.

✪ HB-GJ2 ELBOW JOINT TYPE

- The range of elbow joint motion is 0~135°
- Spasm protection mode, manual controller can automatically control the shutdown to protect the patient's limbs
- The adjustable range of the bracket is 0~350mm, and the error is ±10%

✪ HB-GJ3 SHOULDER JOINT TYPE

- Shoulder joint range of motion 0~170°
- It is capable of assisting the flexion and extension of the shoulder joint
- LED display can display the running time, speed and angle in real time

✪ HB-GJ4 SHOULDER AND ELBOW JOINT TYPE

- Range of movement of shoulder and elbow joint 0~135"
- The exercise angle, speed, and time can be adjusted
- Through the change of the bracket, a patient can do exercise of shoulder joint and elbow joint separately or at the same time

✪ HB-GJ5 LOWER LIMB JOINT TYPE

- Knee joint range of motion 0~130°
- Digital microcomputer control
- Polygon-like structure accords with ergonomics

✪ HB-GJ6 ANKLE JOINT TYPE

- Ankle range of motion 0~50°
- Double foot pedal design, making patients more comfortable
- Spastic protection mode, protecting the patients' limbs

CONTINUES EXERCISE OF HAND HAOBRO

✪ PRODUCT PRINCIPLE

The S400 continuous passive hand training system is composed of software, a hand rest base and a manipulator.

It is suitable for passive rehabilitation training within -40º-40º for wrist joints, 0º -50º for metacarpophalangeal joints, and 0º~50º for proximal interphalangeal joints

✪ APPLICATION SCOPE

- Optional finger training, wrist training and finger-wrist training (fingers and wrists trained at the same time)
- Dysfunction of upper limbs caused by neurological diseases;
- Patients in the recovery of upper limb finger after surgery;
- There are 0 or more muscle strength patients (including 0 grade muscle strength).

✪ FEATURES

1. **Fully passive training mode**
2. **The emergency stop switch**
3. **The left and right hands are independently configured for the design;**

Single motor, adjustable degree, quick cutting.

4. **Based body engineering design**

According to the base of ergonomics, the machine can be fixed, and the patient's forearm is held, and the patient is comfortable to carry out the ability to rehabilitate.

LIMBS EXERCISE HAOBRO

✪ PRODUCT PRINCIPLE

Output a given signal according to preset parameters, through the patient's active force or motor

The driving link mechanism drives the patient's limbs to perform elliptical exercise training at the same time.

✪ SCOPE OF APPLICATION

It is used for active and passive rehabilitation training of limbs of patients with limb dysfunction.

✪ FEATURES

1. FES functional electrical stimulation
Standard 8-channel electrical stimulation (expandable to 16 channels), with real-time electrical stimulation of the corresponding muscles during exercise, it assists muscle contraction and can also be used independently! (APM07E)

2. Five protection functions
Spasm protection, blood oxygen detection, pulse detection, manual emergency stop, and alarm for electrode falling off.

3. Situational interactio
In the training process, it can be used with the locomotive game interface to display the left and right balance status in real time to improve the patient's attention.

4. Three treatment modes
With comprehensive synergistic effect of different modes -- Functional electrical stimulation + passive mode + active mode, and through seamless switching, it can improve treatment efficiency.

5. Tablet PC control
WINDOWS operating system with real-time display of various training data, including speed, distance, resistance, power, blood oxygen, pulse rate, and time, etc. Patient data can be stored, and user information can be exported.

6. High efficiency
Charges for three functions, namely, functional electrical stimulation, active and passive training. and pulse oximetry, are combined. It can shorten the treatment time and improve the overall benefit.

PRODUCT SPECIFICATION	
APM07	APM07E
Limbs move together	Limbs moving together + 8-channel electrical stimulation box (upgradeable to 16 channels)

HAND FUNCTION TRAINING HAOBRO

✪ PRODUCT PRINCIPLE

Use mechanical structure to do upper limb joint function training of flexion and extension, rotation, grasp and others, to improve muscle strength and endurance, expand the joint range of motion, to improve the hand proprioception, function and hand-eye coordination ability.

✪ APPLICATION SCOPE

Rehabilitation training for patients with hand dysfunction caused by cerebrovascular disease, hand rheumatoid arthritis, hand osteoarthritis, hand fracture surgery, hand joint movement limitation, and hand muscle weakness.

✪ FEATURES

Comprehensive function training device
Provide 12 training modes, fully meet the requirements of different hand function rehabilitation training.

Precise resistance regulation
Provide resistance adjustment range:250g-2500g, fully meet the training requirements of different patients.

High-efficiency training modes
Provide 4 groups of individual weight blocks, allow to train 4 patients simultaneously.

Humanized design
Provide circular support base, minimize the risk of collision.

LOWER LIMBS TRAINING HAOBRO

✪ PRODUCT PRINCIPLE

The lower limb rehabilitation training system can adjust the angle of the device, so that the patient can perform passive stepping motions of the lower limbs during standing training. By adjusting the servomotor, it can precisely control and correct the stepping angle and speed of the leg. During the training, the motor is flexibly accelerated and decelerated to simulate the stepping habits of normal people, so that the patient can move more smoothly. During the training, the patient's leg output is collected in real time, and the patient's spasms are monitored in coordination with game training through the set spasm sensitivity at any time for timely spasm protection.

✪ FEATURES

1. Upright angle of the bed

The adjustable range of the vertical angle of the bed should be within 0°-90°;

2. Pressure range

Should be able to measure the pressure on the left and right pedals respectively, and support the assessment of muscle stiffness;

3. Spasm protection

During training, the occurrence of spasms is monitored in real time. Once a spasm occurs, stop the training immediately to protect the patient and prevent any secondary injury caused by the training.

4. Step angle

According to the physiological gait curve of the human body, the stepping motion can be precisely controlled, and the stepping range can be adjusted within 0-25° in real time;

5. Leg length adjustment

a. The pedal height can be adjusted electrically according to the patient's height, which is convenient to operate;

b. During stepping training, the pedal can be adaptively matched according to the stepping rhythm to strengthen the patient's proprioceptive input;

6. Active/passive training

LOWER LIMB EXOSKELETOR REHABILITATION ROBOT ZEPU

✪ FEATURES

- The hip and knee joints are used to drive patients to take normal walking movements, providing a new way of upright walking rehabilitation training.
- Track and evaluate, quantify the occurrence of spasms, and protect the safety of training.
- Gait analysis and visual training status improve the efficiency of rehabilitation training.
- Situational interaction mode to enhance training enthusiasm.

ZEPU-A19
Size(mm): 900×1250×(1240-1690)(L×W×H)
Weight: 120kgs

ACTIVE AND PASSIVE TRAINING HAND REHABILITATION ZEPU

ZEPU-K2000A

ZEPU-K2000B

ZEPU-K2000C

ZEPU-K2000D

ZEPU-K2000E

ZEPU-K2000K

FEATURES

- Multiple training modes: active mode, passive mode, active-passive mode, auxiliary mode, etc.
- Interactive group training system: integrated with entertainment to improve patient participation enthusiasm.
- Biological feedback fast catches the active participation of patients.
- Safety protection device.

K2000A/B/C
Size(mm):750×740×1100(L×W×H)
Weight: 55kgs/80kgs/80kgs
K2000D/E/K
Size(mm): 900×740×1300 (L×W×H)
Weight: 90kgs/90kgs/42kgs

ACTIVE AND PASSIVE TRAINING SYSTEM ZEPU.

ZEPU-A17A/B

ZEPU-AI7D

FEATURES

- It has four training modes: upper limb training, lower limb training, upper and lower limb freedom, and upper and lower limb coordination.
- A variety of prescriptions are preset, and users can also customize prescriptions and import and export through USB flash drives.
- With muscle strength assessment function.
- A variety of 2D and 3D therapy games built into the training mode.
- With real-time feedback function.
- 10.1-inch color LCD touch display control.
- Body height adopts electric adjustment.
- Upper limb and lower limb accessories are avaliable for bedside type.

ZEPU-A17A/B
Size (mm): 1000×750×1270(L×W×H)
Weight: 50kgs

ZEPU-AI7D
1170×580×1050(L×W×H)
Weight: 70kgs

LOWER LIMB BIOFEEDBACK TRAINING AND EVALUATION ZEPU

ZEPU-X6

ZEPU-X8

FEATURES

- Super early functional gait training.
- Situational interactive biofeedback, quantifiable data evaluation.
- Lying, sitting, standing a variety of position change, prevent long-term bed and reduced movement caused by complications.
- Efficient repetitive and precise training.

ZEPU-X6/8
Size (mm): 2750×1100×2350 (L×W×H)
Weight: 205kgs/210kgs

DIGITAL OT ASSESMENT AND TRAINING SYSTEM ZEPU

ZEPU-SG2/3

Digital OT assessment and training system

✪ FEATURES

SG2:Provide more than 50 interactive training modes
Able to perform finger fine motor control training, upper limb motor function training and evaluation recording.
SG3:A variety of accessories are available to evaluate and train fine movements of upper limbs and hands.

ZEPU-SG2/3
Size(mm):1070×800×(1050-1350)(L×W×H)
Weight: 61kgs/75kgs

ZEPU-SG2

ZEPU-RX1

Multi-joint flexible comprehensive rehabilitation trainer

✪ FEATURES

Multiple movements of the wrist joint can be trained, palmar flexion, dorsiflexion, radial deviation, ulnar deviation, pronation, and supination.

ZEPU-SG3

LOWER LIMB MUSCLE STRENGTH TRAINING ZEPU

✪ FEATURES

- Data analysis of assessment and training.
- The human-computer interaction of the rehabilitation training mode.
- Squat training.
- Muscle strength training.

ZEPU-A15
Size (mm): 2060x775×1443(L×W×H)
Weight: 180kgs

LOWER LIMB FEEDBACK TRAINING AND EVALUATION SYSTEM ZEPU

✪ FEATURES

- AI intelligent learning.
- Gait walking training.
- Lying, sitting, standing position.
- Panoramic sound entertainment enjoy rehabilitation.

ZEPU-A13
Size(mm):2500×830×1240(L×W×H)
Weight: 265kgs

MULTI FUNCTION TRAINING EXERCISE ZEPU

✪ FEATURES

- It covers 10 training modes and provides a “one-stop”full cycle service for musculoskeletal rehabilitation.
- Magnetic adsorption technology.
- Six avaliable extenders.
- Human-computer interactive training.

ZEPU-A14
Size(mm): 740×540×(1045-1445)(L×W×H)
Weight: 50kgs

MULTI EXERCISE ZEPU

ZEPU-K2000F

ZEPU-K2000F

ZEPU-K2000H

ZEPU-S1

ZP-EH2000A

✪ FEATURES

- Special designed for children and family.
- Interactive training system is integrated with exercise and entertainment.
- Only one therapist could guild several children at the same time.
- Option: with or without chair.

K2000F/G/H	EH2000A
Size(mm): 750×580×900 (L×W×H)	Size(mm): 900×540×(1030-1130)(L×W×H)
Weight: 65kgs/55kgs/55kgs	Weight: 20kgs

THREE DIMENSION UPPER LIMB TRAINING AND EVALUATION ZEPU

✪ FEATURES

- Intelligent assessment, artificial intelligence improves quality and efficiency.
- The latest technology in rehabilitation, imitating true feelings.
- Both active and passive modes are avaliable.
- Three-dimensional space to improve sports performance.
- One-click switching between left and right arms.

ZEPU-A16
Size (mm): 1000×750×1270(L×W×H)
Weight: 50kgs

UPPER LIMB TRAINING EXERCISE ZEPU

✪ FEATURES

- Space transmission.
- 6-DOF manipulator.
- Both left and right. Exclusive upgrade of left and right arm side change technology.
- Strength according to the actual needs of the upper arm and the lower arm.

ZEPU-A12
Size(mm):1000×880×(1065-1465)(L×W×H)
Weight:60kgs

ISOKINETIC MUSCLE STRENGTH TRINER-ZEPU-KS

✪ FEATURES

- Hydraulic two-way damping technology.
- Resistance 10 adjustable.
- Group training mode to enhance the fun of training.
- The combination of upper limb, lower limb and core training.

Type	ZEPU-KS101	ZEPU-KS102	ZEPU-KS103	ZEPU-KS104	ZEPU-KS105	ZEPU-KS106	ZEPU-KS107	ZEPU-KS108	ZEPU-KS109	ZEPU-KS110
Size(mm)	1135x 740x 920	925x 740x 920	980x 1080x 1260	1340x 740x 1185	995x 740x 1230	1775x 740x 1030	980x7 70x 1185	1300x 740x 1100	8970x 05x 1030	1045x 740x 960
Weight	40kgs	34kgs	56kgs	50kgs	42kgs	66kgs	40kgs	50kgs	40kgs	42kgs

STRETCHING TRAINING SYSTEM-ZEPU-QS

✪ FEATURES

- Use passive drafting principle to relax the body tension soft tissue.
- Precise positioning, correct muscle stretching.
- Draft strength and sitting height are adjustable.
- Effectively avoid joint pain and injury.
- Color can be customized.

Type	ZEPU-QS1	ZEPU-QS2	ZEPU-QS3	ZEPU-QS4	ZEPU-QS5	ZEPU-QS6	ZEPU-QS7
Size(mm)	1250x 900x 1600	1350x 880x 1280	2000x 900x 1220	950x 900x 1100	1350x 1300x 1150	1650x 880x 1300	1100x 760x 1220
Weight	80kgs	56kgs	100kgs	64kgs	90kgs	106kgs	42kgs

ZEPU-K2000A.B.C.D.E.K

ZEPU-K2000A

ZEPU-K2000B

ZEPU-K2000C

ZEPU-K2000D

ZEPU-K2000E

ZEPU-K2000K

✪ FEATURES

- Multiple training modes: active mode, passive mode, active-passive mode, auxiliary mode, etc.
- Interactive group training system: integrated with entertainment to improve patient participation enthusiasm.
- Biological feedback fast catches the active participation of patients.
- Safety protection device.

K2000A/B/C	K2000D/E/K
Size(mm):750×740×1100(L×W×H)	Size(mm): 900×740×1300 (L×W×H)
Weight: 55kgs/80kgs/80kgs	Weight: 90kgs/90kgs/42kgs

ZEPU-SG1-1PLUS MULTIFUNCTIONAL SYSTEM FOR HAND TRAINING

ZEPU-K2000F

ZEPU-K2000F

ZEPU-K2000H

ZEPU-S1

ZP-EH2000A

✪ FEATURES

- Special designed for children and family.
- Interactive training system is integrated with exercise and entertainment.
- Only one therapist could guild several children at the same time.
- Option: with or without chair.

K2000F/G/H	EH2000A
Size(mm): 750×580×900 (L×W×H)	Size(mm): 900×540×(1030-1130)(L×W×H)
Weight: 65kgs/55kgs/55kgs	Weight: 20kgs

ZEPU-SG1-1PLUS MULTIFUNCTIONAL SYSTEM FOR HAND TRAINING

ZEPU-SG1

ZEPU-SG1 PLUS

✪ FEATURES

- The system is designed for 12 common hand motion postures.
- Repetitive tranining stimulation.
- It solves the dysfunction.
- It can realize the function of scene interaction.

ZEPU-SG1
Size(mm):1160×1160×1394 (L×W×H)
Weight:120kgs

NEUROREHABILITATION FOR CARDIAL ZARYA

SPECIAL OPTIONS FOR CARDIAC REHABILITATION

SPECIAL OPTIONS FOR NEUROLOGICAL REHABILITATION

ADULT MOBILE WALKER-FIZYOMED

FİZYORUN 1000L

ADULT MOBILE WALKER

TEKNIK ÖZELLIKLER / TECHNICAL SPECIFICATION	
Güç Girişi / Power Supply	220-240 V 50/60 Hz
Motor / Motor	1
Yükseklik / Heigth	195 cm
Eni / Width	80 cm
Boyu / Length	100 cm
Yükseklik Aralığı / Height Range	150 - 230 cm
Yaklaşık Ağırlığı / Approx. Weight	50 - 55 kg
Hasta Taşıma Kapasitesi / Patient Carriage Capacity	210 kg
Sınıf Beyanı / Class Declaration	class I
Sertifikalar / Certificates	EN ISO 13485 : 2016 CE (Declaration Of Conformity)

FİZYORUN 1000S

KID MOBILE WALKER

TEKNIK ÖZELLIKLER / TECHNICAL SPECIFICATION	
Güç Girişi / Power Supply	220-240 V 50/60 Hz
Motor / Motor	1
Yükseklik / Heigth	175 cm
Eni / Width	80 cm
Boyu / Length	100 cm
Yükseklik Aralığı / Height Range	130 - 210 cm
Yaklaşık Ağırlığı / Approx. Weight	45 - 50 kg
Hasta Taşıma Kapasitesi / Patient Carriage Capacity	160 kg
Sınıf Beyanı / Class Declaration	class I
Sertifikalar / Certificates	EN ISO 13485 : 2016 CE (Declaration Of Conformity)

EXERCISE LADDER-FIZYOMED

✪ FEATURES

- Designed to be used for the patient's ladder and rehabilitation exercise programs.
- One side of the ladder holds 4 steps with a 15 cm gap between each step,
- One side holds 3 steps with a 20cm gap between each step.
- Adjustable height on the handling bars which can be altered in reference to the patient's height.
- Anti-rust electrostatic paint is used on all metal and steel parts and accessories.

TEKNIK ÖZELLIKLER / TECHNICAL SPECIFICATION	
Boyu / Length	210 cm (± 10 cm)
Eni / Width	60 cm (± 10 cm)
Yükseklik / Heigth	125 - 170 cm (± 10 cm)
Hasta Taşıma Kapasitesi / Patient Carriage Capacity	160 kg
Yaklaşık Ağırlığı / Approx. Weigth	40 - 55 kg
Sınıf Beyanı / Class Declaration	class I
Sertifikalar / Certificates	EN ISO 13485 : 2016 CE (Declaration Of Conformity)

FINGER LADDER-FIZYOMED

✪ FEATURES

- It was made by Strong wood. Painted by solid high quality wood lacquer
- 130 cm in length,
- 30 step angled
- Width 7 cm.
- Measure of among 2 steps is not more 4 cm or not less 3 cm
- Can be mounting a wall

✪ FEATURES

- Used in rehabilitation exercises for patients
- Manufactured from Wooden material,
- 11 step cylinders
- Can be wall mounted
- 90x220 cm

PARALLEL BAR-FIZYOMED

✪ FEATURES

- Patient holding bar with width adjustment for easy
- Height of the parallel bar can be altered according to the patient's height.
- 1 Piece wooden base
- Rust free electrostatic paint is used on all metal and steel parts
- If required can be manufactured 200 cm

TEKNIK ÖZELLIKLER / TECHNICAL SPECIFICATION	
Boyu / Length	300 cm (± 10 cm)
Eni / Width	58 - 88 cm (± 10 cm)
Yükseklik / Heigth	75 - 110 cm (± 10 cm)
Hasta Taşıma Kapasitesi / Patient Carriage Capacity	160 kg
Yaklaşık Ağırlığı / Approx. Weigth	60 kg - 25 kg (Basic)
Sınıf Beyanı / Class Declaration	class I
Sertifikalar / Certificates	EN ISO 13485 : 2016 CE (Declaration Of Conformity)

FIZYOFLEX-2000-FIZYOMED

KNEE CPM DEVİCE

Fizyoflex 2000 is a very comfortable and safe (Continuous Passive Motion) device used for preventing complications that may occur after knee and hip surgeries such as edema and pain, and increase knee movement and functional activities.
Fizyoflex 2000 device has an anti-spazm (inversion) feature for any possible spasms and resistances that the patient may experience during the workout, and it decreases the duration of the therapy with its practicability.

TEKNIK ÖZELLIKLER / TECHNICAL SPECIFICATION	
Güç Girişi / Power Supply	220 - 240V 50/60Hz.
Güç Tüketimi / Power Consumption	40 VA
Fleksiyon / Flexion	130 °
Ekstansiyon / Extension	-10
Kalça Fleksiyon / Hip Flexion	85 °
Kalça Ekstansiyon / Hip Extension	5 °
Plantar Fleksiyon / Plantar Flexion	40 °
Dorsal Fleksiyon / Dorsal Flexion	40 °
Komple Bacak / Full Leg	71/106 cm
Tibia	38/58
Femur	33/48 cm
Hız (derece/dakika) / Speed (degree/minute)	20 ° - 250 ° /dakika/minute
Zamanlayıcı / Timer	0°99 dakika/minute
Başlatma-Bitirme-Ters Çevirme / Start-Stop-Reverse	Var / Available
Transport Taşıma / Transport Handle	Var / Available
Dijital Ayarlama / Digital Adjustment	Var / Available
Dokunmatik Ayarlama İşaretleri / Touchable Adjustment Marks	Var / Available
Ağırlık / Weight	12,5 kg
Uzunluk / Genişlik / Lenght / Width	101/32
İç Genişlik / Carriage Width	26 cm
Sınıflandırma / Classification	IIA
Sertifikalar / Certificates	EN ISO 13485 : 2016 CE 1984

PATIENT WALKING SYSTEM-FIZYOMED

✪ PATIENT WALKING SYSTEM

It is a cordless device which can make patients able to stand on their own feet with lift up and transport function of mobile lift and also patients can make walking exercises with wheels that provide smooth driving experience.

TEKNIK ÖZELLIKLER / TECHNICAL SPECIFICATION	
Güç Girişi / Power Supply	220-240 V 50/60 Hz
Güç Tüketimi / Power Consumption	2600 W
Boyu / Length (max.)	135 cm
Eni / Width (max.)	95 cm
İç Genişlik	62 cm
Yükseklik / Heigth	200 cm
Yaklaşık Ağırlığı / Approx. Welgth	75 kg
Max - Min. Yükseklik	140 cm - 225 cm
Sınıf Beyanı / Class Declaration	class II B
Sertifikalar / Certificates	EN ISO 13485 : 2016

PATIENT LIFT-FIZYOMED

✪ FEATURES

- Unit fitted with electrical motor for lifting.
- Hand controller
- Lockable breaking and wheeling system
- Manual base angle adjustment

TEKNIK ÖZELLIKLER / TECHNICAL SPECIFICATION	
Güç Girişi / Power Supply	220-240 V 50/60 Hz
Motor / Motor	24 Vdc
Güç Tüketimi / Power Consumption	35 VA
Yükseklik / Heigth	140 cm
Boyu / Length	90 cm
Hasta Taşıma Kapasitesi / Patient Carriage Capacity	250 kg
Sınıf Beyanı / Class Declaration	class I
Sertifikalar / Certificates	EN ISO 13485 : 2016 CE (Declaration Of Conformity) TPE Tescil no: 2012 02831

✪ FEATURES

- It has wheels to carry the patients to go somewhere or keep on the treadmills.

TEKNIK ÖZELLIKLER / TECHNICAL SPECIFICATION	
Güç Girişi / Power Supply	220-240 V 50/60 Hz
Motor / Motor	24 Vdc
Güç Tüketimi / Power Consumption	35 VA
Yükseklik / Heigth	240 cm - 260 cm
Boyu / Length	100 cm
Eni / Width	79 cm
Hasta Taşıma Kapasitesi / PatientCarriage Capacity	250 kg
Sınıf Beyanı / Class Declaration	class I
Sertifikalar / Certificates	EN ISO 13485 : 2016 CE (Declaration Of Conformity) TPE Tescil no: 2012 02831
Standart Aksesuarları / Standard Accesories	1 Adet Hasta Taşıma Askısı

POOL LIFT-FIZYOMED

✪ FEATURES

- Unit fitted with electrical motor for lifting.
- Hand controller
- 180 kg lifting capacity
- 360 º rotatable about its axis
- Anti rust electro static paint on all metal / steel parts
- Stainless chromium-nickel material

TEKNIK ÖZELLIKLER / TECHNICAL SPECIFICATION	
Güç Girişi / Power Supply	220 - 240V 50/60 Hz
Motor	1
Sınıf Beyanı / Class Declaration	class I
Sertifikalar / Certificates	EN ISO 13485 : 2016 CE (Declaration Of Conformity)

✪ FEATURES

- Unit fitted with electrical motor for lifting.
- Hand controller
- 180 kg lifting capacity
- 360 º rotatable about its axis
- Anti rust electro static paint on all metal / steel parts •
  Stainless chromium-nickel material

TEKNIK ÖZELLIKLER / TECHNICAL SPECIFICATION	
Güç Girişi / Power Supply	220 - 240V 50/60 Hz
Motor	1
Sınıf Beyanı / Class Declaration	class I
Sertifikalar / Certificates	EN ISO 13485 : 2016 CE (Declaration Of Conformity)

PULLEY UNIT-FIZYOMED

✪ FEATURES

- Easy use
- Up to 24 kg adjustable weight setup
- Hand, shoulder and leg exercise option
- Dual hand using option
- Adjustable height option
- Rust and against external factors and chrome plated metal parts

TEKNIK ÖZELLIKLER / TECHNICAL SPECIFICATION	
Boyu / Length	220 cm (± 10 cm)
Eni / Width	30 cm (± 10 cm)
Yaklaşık Ağırlığı / Approx. Weigh	50 kg
Sınıf Beyanı / Class Declaration	class I
Sertifikalar / Certificates	EN ISO 13485 : 2016 CE (Declaration Of Conformity) TPE Tescil no: 2008 02292
Standart Aksesuar / Standart Accesories	2 Adet tutma kolu / 2 pcs Pad in Different Sizes

AVIOR AND DRACO –MED INMED

Box dimensions: **120 x 80 x 110 cm** Weight: **+44 kg**

Box dimensions: **80 x 60 x 75 cm** Weight: **+20 kg**

Avior crurotalar and knee joint rehabilitation device enables effective rehabilitation through self-assisted, active, resistance and functional exercises of the crurotalar joint. Avior provides also a knee rehabilitation option, achieved by self-assisted, active and resistance flexion and extension.
The option of self-assisted exercising allows the therapist to supervise more than just one patient at a time. While training, the patient defines his/her pain threshold and the device is set accordingly, ensuring they are the safety and comfort during exercising. Avior is a device that is simple to use and mobile due to the wheels installed on the main frame. An ergonomic, eye-catching design ensures the comfort of usage.

Draco crurotalar joint rehabilitation device enables active, self-assisted and resistance exercises of the crurotalar joint. The option of self-assisted exercises enables the therapist to supervise more than just one patient at a time. While training, the patient defines his/hers pain threshold and the device is set accordingly, ensuring the safety and comfort of exercising. In the next stage of rehabilitation the patient trains in active and active-resistant mode to increase their strenght and agility.
Precise mapping of the anatomical axles of the crurotalar joint in the device enables the patient to return to or to achieve the complete agility. Draco is simple and intuitive to use and its ergonomic design ensures comfort during usage. It also offers desirable aestetics.

Exercises:

- Plantar flexion and dorsiflexion – self assisted, active and active-resistance,
- Pronation and supinantion – active, active-resistance and self assisted,
- Flexion and extension of the knee – self assisted, active and active-resistance.

Range of motion:

Dorsiflexion [°]:	40
Plantarflexion [°]:	47
Pronation and supination [°]:	34
Extension of the knee [°]:	40
Flexion of the knee [°]:	30

Technical data:

Weight [kg]:	25
Lenght [cm]:	89,2
Width [cm]:	39
Height [cm]:	91

Exercises:

- Plantar flexion and dorsiflexion – self assisted, active and active-resistance.
- Pronation and supination – self assisted, active and active-resistance.
- Multidimensional exercises – self assisted, active and active-resistance.

Range of motion:

Dorsiflexion [°]:	40
Plantarflexion [°]:	47
Pronation and supination [°]:	34

Technical data:

Weight [kg]:	16
Lenght [cm]:	68
Width [cm]:	40
Height [cm]:	94
Dimmensions (L x W x H) - folded [cm]:	68 x 40 x 62

AXELERO I-MED INMED

Medical and training treadmill Axelero I, type Cardio – is an active medical device designed for stress tests. It is used in cases where it is necessary to load the human body with dosed workload to evaluate the person's physical efficiency and to assess his/her functional reserves. The treadmill allows for controlled loading of the human body during stress tests. The treadmill is designed for use in hospitals, clinics, outpatient clinics, and specialist doctors' offices.

Box dimensions: **230 x 90 x 73 cm** Weight: **+50 kg**

FEATURES

- System of gradual speed increase from 0,2 km/h to a preset value.
- Belt speed stabilization in the full drive load range.
- Smooth and quiet operation in the full belt speed range.
- Easily accessible safety switch which allows for switching the device and the drive off manually.
- Compatibility with popular protocols used by stress test systems (e.g. Trackmaster).
- Serial port RS232 or USB for external control.
- Handlebars (option) – for patients of short stature.

Technical data:

Belt speed range [km/h]:	0,2 to 25
Belt speed setting accuracy [km/h]:	0,1
Belt elevation angle range [%]:	0-25
Belt elevation angle adjustment accuracy [%]:	0,5
Length of the functional part of the belt [cm]:	140
Width of the functional part of the belt [cm]:	52
Width of the stationary rest area [cm]:	10
Patient's maximum premissible weight [kg]:	200
Power supply and consumption [V/Hz/A]:	230/50/15
Device weight [kg]:	200
Dimensions (L x W x H) [cm]:	217 x 73 x 125

BOARD FOR MANUAL EXERCISE -MED INMED

Box dimensions: **80 x 30 x 60 cm** Weight: **+1,5 kg**

KTM (with resistance):

- The board for manual exercises with resistance is intended for performing self-assisted exercises, active exercises, exercises with resistance using pulley and weight systems.
- Equipped with a set of various accessories, it enables special application in the therapeutic improvement of orthopedic, rheumatological and neurological diseases of the hand.
- It enables dorsiflexion and palmar flexion of the hand, supination and pronation of the forearm, manual movements of the fingers.
- Foldable base.

Accessories:

- Circle with handle - for pronation and supination of the forearm.
- Handle - for dorsiflexion and palmar flexion in wrist joint.
- Flap - for dorsiflexion and palmar flexion in wrist joint.
- Vertical spiral - for rotation in wrist joint.
- Horizontal roller - for dorsiflexion and palmar flexion in wrist joint.

Technical data:

Table top dimensions (W x L) [cm]:	52 x 86
Height adjustment [cm]:	54-86
Mass [kg]:	10
Plummet mass (5 items) [kg]:	0,25/item

KTM BO (without resistance):

- The board for manual exercises without resistance is used for exercises aimed at improving manipulative skills and motor and visual-motor coordination of the hand.
- In dysfunctions after post-traumatic conditions, in neurological and rheumatoid diseases.
- It also help to increase the strength of the hand and forearm muscles.
- It's used in hospital conditions: in rehabilitation rooms, surgical and neurological wards as well as in rehabilitation clinics and health centers.
- The purpose of its use is to treat or alleviate the course of diseases and to mitigate the effects of injuries and impairments.
- Foldable base.

Accessories:

- Horizontal spiral.
- Vertical roller with the spring.
- Vertical ball with the spring.
- Pin.
- Knob.
- Basket for forearm.

Technical data:

Table top dimensions (W x L) [cm]:	72 x 52
Height adjustment [cm]:	54-86
Mass [kg]:	8,4

PICTOR-MED INMED

Box dimensions (Pictor + table): **120 x 80 x 93 cm** Weight: **+38 kg**

Pictor wrist joints rehabilitation device allows the individual to achieve the complex rehabilitation of the wrist joint based on active and self-assisted exercises which are needed to rebuild the functions of the anatomical movements of the wrist.
Pictor enables self-assisted, active and resistant exercises for the wrist area, and is supplemented with self-assisted rotational movements of the forearm. While training, patient defines the pain threshold and the device is set accordingly, ensuring safety and comfort during exercising.

Technical data:

	Pictor	Table
Weight [kg]:	17	6
Lenght [cm]:	36	94,5
Width [cm]:	62	45
Height [cm]:	24	72

Features:

- Self-assisted, active and active-resistance rehabilitation.
- Mapping the anatomical axles of the wrist joint.
- Effectiveness and comfort of rehabilitation.
- Adaptive to different stages of the injury.

Features of the table:

- Possibility of Pictor assembly.
- Mobility.

Range of motion:

Wrist flexion and extension [°]:	90
Adduction of the wrist joint [°]:	72
Abduction of the wrist joint [°]:	90
Forearm pronation and supination [°]:	90

REHACROSS-MED INMED

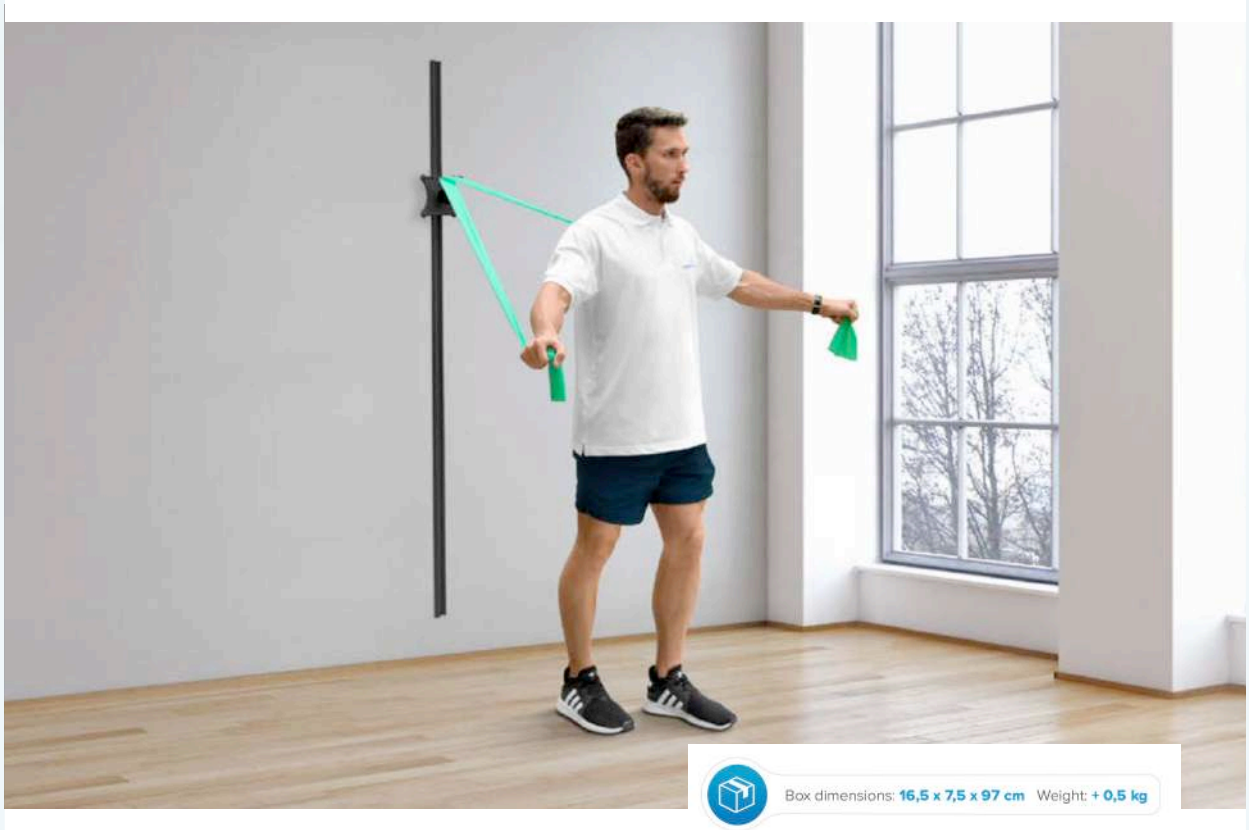

Box dimensions: **16,5 x 7,5 x 97 cm** Weight: **+ 0,5 kg**

RehaCross is a very easy to assemble and safe equipment for attaching different resistance tapes (available on the market).
Simple, lightweight construction with a (wall-mounted) guide rail and adjustable band lock which take up little space. Suitable for use in sport centers or in homes.
Flexible bands support a very diverse resistance trainings, which mobilize deep muscles highly efficiently and improve stability and balance control.
Dumbbells or weights can be replaced with bands of different resistance. Adjustable band holder allows for custom-made training for upper and lower limbs, trunk muscles and myofascial workout.
The device will definitely help increase the effectiveness of each training and will also serve healthy people who want to prevent joints and muscles injuries and pain.

Features:

- Compact.
- Easy assembly.
- Convenient height adjustment.
- Fast band change.
- One device, many possibilities.

Technical data:

Height [cm]:	190
Max. width [cm]:	16
Max. band load [kg]:	up to 50
Weight [kg]:	5

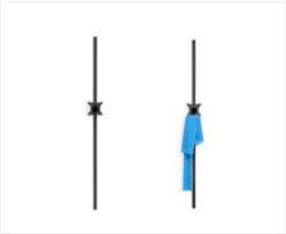

SLING TRAINING AND EXERCISE CAGE -MED INMED

Sling training and exercise cage KC, type 1 cage is designed for partially-unloaded exercises to improve condition and remove deficiency of joints and muscles. It is useful in physical rehabilitation of patients with rheumatoid state, in paresis or after injuries.
Made from steel painted with white powder epoxy. The cage is composed of 8 detachable panels (rectangular steel grids for attachment of various accessories during training).
Complete workstation consists of: KC type 1 cage, the table, set of accessories (ropes, slings, etc.).

Box dimensions: **215 x 136 x 55 cm** Weight: **+50 kg**

Technical data:

Dimensions (H x W x D) [cm]:	200 x 200 x 200
Dimensions of 1 panel [cm]:	100 x 200 x 3
Total mass [kg]:	108

Accessories for cage:

Accessories specification		STANDARD F set	FULL F set
Name	Symbol	QUANTITY in set	QUANTITY in set
Rope 160 cm	KC/01	8	14
Rope 95 cm	KC/02	6	6
Rope 245 cm	KC/03	1	1
Rope 572 cm	KC/04	1	1
Rope 375 cm	KC/05	3	3
Rope 500 cm	KC/01	-	1
Arm and thigh sling 145 x 540	KC/07	4	6
Pelvic sling 230 x 750	KC/08	2	2
Chest sling 230 x 700/100	KC/09	1	1
Head sling 170 x 540	KC/10	1	1
Foot sling 75x540	KC/11	4	4
2 joint sling	KC/12	4	4
Universal pelvic pulley belt	KC/13	1	1
Boot	KC/14	1	2

VERTIHELP MOBILE PATIENT LIFT-MED INMED

FEATURES

Base legs spreading
in the range of 50-91 cm

Foot lever
Enables easy adjustment of the base leg spread, which, in combination with the low footrest, allows easy approach to wheelchairs, beds, etc.

Available and ready
After unpacking the device is ready for use.

The VertiHelp / VertiHelp UNI / VertiHelp UNI eFlow is a compact, mobile device ideal for people who have difficulty walking but can sit and stand with support. It is used to move the end user from one seated position to another - for example, to transfer from or to an armchair, chair, wheelchair, bed or toilet. It makes such transfers easier when changing dressings, undergarments, or performing hygiene and care.

Used in daily care in nursing homes, hospitals, sanatoriums, and in the home environment, it simplifies everyday transfers. Its small turning radius makes it ideal even for tighter spaces.

THE DEVICE IS INTENDED FOR USE IN:

Hospitals and other health care facilities

Sanatoriums

Nursing homes

Private use

VERTIHELP UNI MOBILE PATIENT LIFT-MED INMED

FEATURES

Narrowed part of base legs
Small distance between the base legs facilitates easier access to, e.g. chairs with a narrow gap between the legs.

Additional wheels
2 extra wheels enhancing the stability of the device and patient.

Small transport dimensions
Device is delivered in a laid-out form (the upper part and the footrest are supplied separately), in small cardboard, saving the space during the transport.

Upright Position Transfers
The device facilitates transfers in an upright position, enabling users to move comfortably between a chair, wheelchair, bed, or toilet.

Short-Distance Transfers
Designed for short-distance use, the VertiHelp / VertiHelp Uni / VertiHelp Uni eFlow devices are ideal for quick transfers, ensuring users maintain both dignity and comfort throughout the process.

Target User Group
Particularly beneficial for patients with some ability to stand independently or with minimal assistance.

Enhanced Safety
Provides essential support during transfers, reducing the risk of falls or injuries while ensuring a smoother transition between positions.

Diversity of models
Variety of models available, ensuring that everyone can find something to suit their individual needs.

WALK SIMULATOR-PIO-MED INMED

Walk simulator PIO is a device designed for patients with paresis or inertia of the lower limbs (paraplegia), which is used to perform comprehensive rehabilitation exercises in a vertical position. The patient moving the upper limbs actively moves the lower limbs supports, thus maintaining the vertical position, comprehensively sets the whole body in motion.

Comfort of exercise performing increase:

- Electronic control panel showing time of exercise (counted down) or number of gait cycles; acoustic alarm goes off if the exercise exceeds present time.
- A shelf for portable music and video players, newspapers or books.
- Comfortable backrest.
- Adjustable grip bars (A).
- Gloves for patients with weeker hand muscles to provide better grip (A).
- Adjustable footrests (height and depth (7-step) adjustment) (A).

(A) Box dimensions: **135 x 95 x 71 cm** Weight: **+36 kg**

(B) Box dimensions: **80 x 80 x 135 cm** Weight: **+16 kg**

Technical data:

	PIO (B)	PIO (A)
Timer [min]:	1-59	1-59
Gait cycles counter:	max. 9999	max. 9999
Range of motion of lower limbs [°]:	max. ± 18 from vertical	max. ± 18 from vertical
Height of patient [cm]:	125-145	165-190
Max. weight of patient [kg]:	95	95
Colour of upholstery:	terracotta	black
Dimensions (L x W x H) [mm]:	950 x 664 x 980	1198 x 760 x 1195 (single) 1198 x 760 x 1560 (double)
Power supply [V]:	battery 3V type CR2032	battery 3V type CR2032
Weight [kg]:	41 49 (with lateral and thoracic support)	55 (single backrest) 61 (double backrest)
Range of height adjustment of footrest [mm]:		85
Range of adjustment of knee holder [mm]:		73
Range of grip bars adjustment [mm]:		188
Range of buttock rest adjustment (horizontal) [mm]:		184
Range of back rest adjustment (horizontal) in ver. with double back rest [mm]:		184

✪ ADVANTAGES OF USING PIO:

- Verticalization of the body.
- Increases respiratory efficency.
- Stimulates circulatory system.
- Prevents urinary infections.
- Provides dynamic load to bone-joint system (e.g. reduces the risk of osteoporosis).
- Prevents tendor contracture and joint degeneration

03

Neurological Rehabilitation

NEUROFORMA-MED INMED

Neuroforma for centers with balance control module and offloading arm is an innovative platform for motor, cognitive and balance control exercises. It consists of a large display, a computerized system for data analysis and an optical system for movement analysis in 3D technology. The device is sturdy and easy-to-use. In addition, its space-saving design makes it suitable for use in less spacious facilities as well as easy to move around.

✪ APPLICATION:

- Neurological rehabilitation.
- Neuropsychological rehabilitation.
- Physiotherapy.
- Geriatrics.
- Post traumatic rehabilitation.
- Orthopaedic rehabilitation.
- Support in development of children with disabilities.
- Health prophylaxis.

✪ HOW IT WORKS:

While using Neuroforma, the patient stands or is seated in front of the screen, which shows their real, mirror reflection. Around that reflection, virtual objects appear. The patient's task is to move their body in such a way that the reflection displayed on the screen catches, hits or moves the appearing objects.

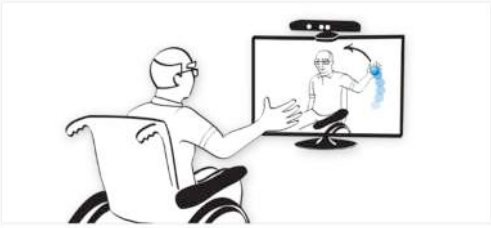

Virtual reality technology enables the patient to receive constant, immediate biofeedback. After each exercise, the patient can consult simple statistics, which are also available in a form of long-term reports presenting their progress for every task separately.

TELENEUROFORMA-MED INMED

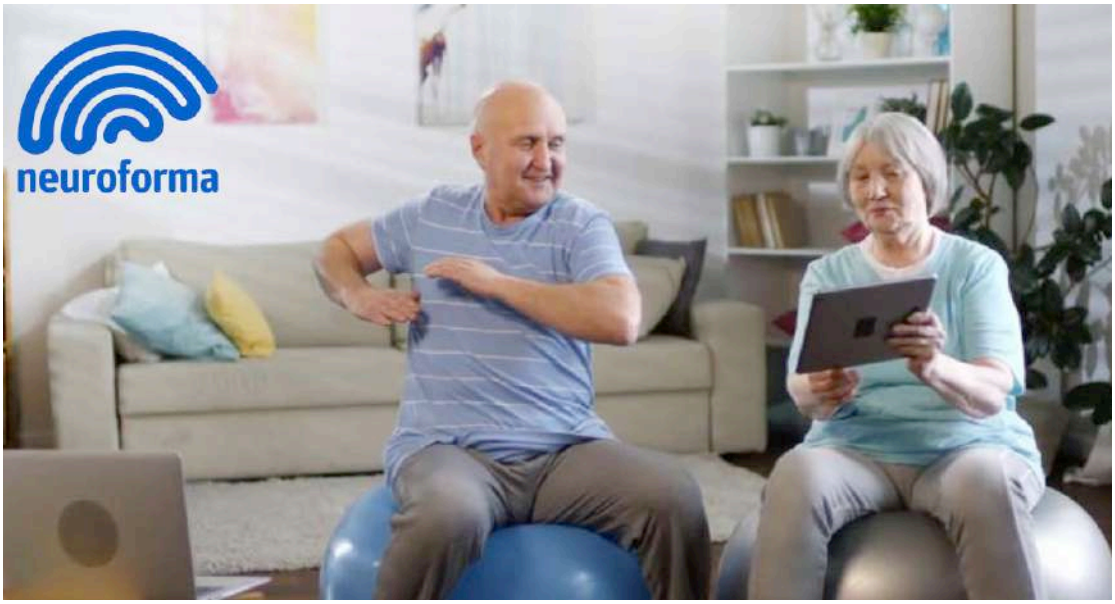

Extend your offer with telerehabilitation

TeleNeuroforma is a modern and effective support for the rehabilitation process of patients who require systematic exercises. Easily share interactive exercises by creating personalized training plans. Start providing innovative remote rehabilitation services to operate comprehensively, effectively and on a larger scale. The platform allows for remote rehabilitation of patients exercising at home. You can log in from a web browser or integrate TeleNeuroforma with your medical information system.

TeleNeuroforma

- Is a modern solution for motor, cognitive and balance control exercises. While using Neuroforma a patient stands or is seated in front of the screen, which shows their real, mirror reflection. Around that reflection virtual objects appear. For home exercises, your patients only need a computer or tablet with a camera and internet access.
- The main task is to move their body in such a way that the reflection displayed on the screen catches, hits or moves appearing objects.
- It is a perfect solution for neurological or geriatric patients with Alzheimer disease, dementia, after brain injury, stroke, cerebral palsy, fractures and many more!

✪ HIGHLIGHTS:

- All exercises and functions are launched in a web browser, they do not require installation or additional devices.
- User-friendly interface makes telerehabilitation intuitive and easy-to-use for both patient and therapist.
- Interactive form of exercise that increases patient involvement and motivates them to follow the exercise plans prepared by a specialist.
- With a large amount of exercises you can individually adapt training session for patient's needs.
- You can also create custom made exercises!
- Advanced medical report will allow you to track the progress.
- Communicate with your patient via voice, video or text messages.

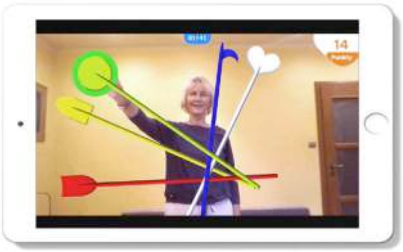

LITEBOX,SKYBOX AND NEURO-MEP-NEUROSOFT

LITEBOX

3-CHANNEL NCS, EMG AND EP SYSTEM WITH DEDICATED KEYBOARD

- 3 acquisition channels for the quickest examination ever
- NCS and needle EMG according to international standards
- Electrical stimulator with two switchable outputs
- Innovative circuits for stimulus artifact reduction
- Portable, can be powered by a notebook

SKYBOX

5-CHANNEL NCS, EMG AND EP SYSTEM WITH DEDICATED KEYBOARD

- All you need is within a lightweight, compact case: stimulators, 5 acquisition channels and dedicated controls
- NCS and needle EMG according to international standards
- 2 independent electrical stimulators with 4 outputs
- All EP modalities in the base delivery set
- Portable, can be powered by a notebook

NEURO-MEP

4/8-CHANNEL NCS, EMG AND EP SYSTEM WITH WIRELESS KEYBOARD

- 4- or 8-channel system, expandable up to 16 channels
- Leader in amplification and stimulation technologies
- All EP modalities in the base delivery set
- Modular design

NEURO AUDIO-NEUROSOFT

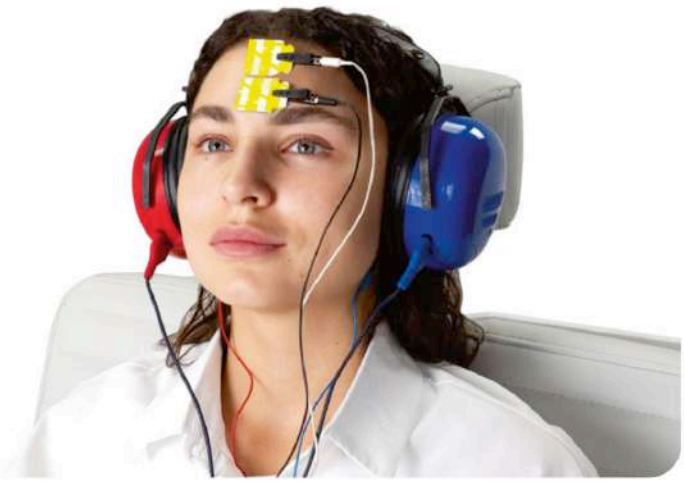

NEURO-AUDIO

2-CHANNEL ABR, OAE, VEMP, ASSR AND ECochG SYSTEM

- High quality of auditory EP and OAE recording
- Multiple options for post-processing of results
- Complete set of techniques, including ECochG, LLR, multi-ASSR and VEMP
- Non-sedated ABR
- Chirp stimulus
- OAE up to 12 kHz

AUDIO-SMART

PORTABLE SYSTEM FOR DIAGNOSTICS AND SCREENING

- Truly portable middle ear analyzer
- 4 frequencies of the probe tone:
- 226, 678, 800, 1000 Hz
- Hearing screening: OAE and automated ABR (AABR) testing
- ABR test with wave V Jewett marker
- Simple and user-friendly touchscreen interface

NEURO-MEP AND NEURO-MS-NEUROSOFT

NEURO-MEP-MICRO

2-CHANNEL ULTRAPORTABLE EMG AND NCS SYSTEM WITH A BUILT-IN KEYBOARD

- 2 channels are optimised to quickly perform motor and sensory conduction tests and needle EMG
- Portable, can operate with a notebook
- All-in-one: stimulators, acquisition channels,
- controls and display
- Electrical stimulator with ultra-fast switching between two outputs

NEURO-MS

DIAGNOSTIC MONOPHASIC MAGNETIC STIMULATOR

- Diagnostics of nervous system disorders
- Powerful monophasic pulse
- Extremely low electromagnetic interference
- Configurations for single- and paired-pulse stimulation
- Ergonomic and lightweight coils of different shapes and sizes
- Compatible with most EMG machines

NEUROMODULATION-NEUROSOFT

NEURO-MSX

MAGNETIC STIMULATOR OF THE NEW GENERATION

- Stimulation frequency — up to 100 Hz, theta-burst stimulation (TBS) — up to 2000 Hz
- New generation of cooled coils: enhanced ergonomics with stimulation controls at your fingertips
- Built-in memory for preset protocols
- Theta-burst stimulation

NEURO-MS/D

TRANSCRANIAL MAGNETIC STIMULATOR

- 20 Hz stimulation at 100% intensity
- Advanced liquid cooling technology guarantees continuous operation without coil overheating
- Neuro-MS.NET software with pre-defined treatment protocols

NEUROSTIM

TRANSCRANIAL ELECTRICAL STIMULATOR

- Treatment of a wide range of psychiatric and neurological disorders
- tDCS, tACS, tRNS, tPCS, tDCS-sham, custom waveform
- Continuous monitoring of electrode impedance
- Stimulus amplitude increment — 25 μA
- Placebo stimulation — tDCS-sham mode
- Intuitive software

NEURON-SPECTRUM & SNORLEX-NEUROSOFT

NEURON-SPECTRUM-65/PSG

CLINICAL PSG SYSTEM (TYPE I SLEEP MONITOR*)

- Ready-made solution for your PSG lab
- Full range of PSG channels*
- Connection to a portable patient unit
- Synchronous video monitoring
- PAP titration under PSG control
- Advanced analysis tools to speed up PSG data interpretation

NEURON-SPECTRUM-AM/PSG

PORTABLE WIRELESS PSG RECORDER (TYPE I, II, III SLEEP MONITOR*)

- Autonomous PSG with video recording both in the clinic and at home
- Full range of PSG sensors and electrodes
- Recording of exams to a memory card and
- real-time data transfer via Wi-Fi
- Manual and automatic PSG analysis
- Perfect choice for a private medical clinic or laboratory startup

SNORLEX

RESPIRATORY POLYGRAPH FOR DIAGNOSTICS OF SLEEP-DISORDERED BREATHING (TYPE III, IV SLEEP MONITOR*)

- Automatic scoring of apnea/hypopnea index (AHI)
- In-home and in-laboratory testing
- Calculation of sleep time based on actigraphy
- Automatic data analysis and report generation
- Up to 25 hours of continuous operation
- Monitoring of CPAP therapy efficacy during sleep

NEURON-SPECTRUM 1-4,AM,EPM-NEUROSOFT

NEURON-SPECTRUM-1..4/P

EEG SYSTEM SERIES

- Robust and time-tested EEG recorders
- 8 to 21 EEG channels + up to 4 channels to record EMG, ECG, EOG and other physiological signals
- Acquisition and review of EEG in arbitrary monopolar and bipolar montages
- EEG recording in the unshielded room
- Impedance indication on the front panel

NEURON-SPECTRUM-AM

WEARABLE WIRELESS EEG RECORDER

- 21 EEG channels
- Full range of polygraphic channels for PSG studies
- Recording of exams to a memory card and real-time data transfer via Wi-Fi
- Ambulatory EEG recording (up to several days) both in the clinic and at the patient's place
- Long-term video EEG monitoring to detect epileptiform activity

NEURON-SPECTRUM-4/EPM

EXPERT-CLASS EEG SYSTEM

- Perfect solution for EEG, short-latency EP, long-latency EP and EMG
- 21 EEG channels + 9 channels to record any physiological signals from EOG to short- latency EP
- Impedance measurement button on the front panel
- 10 options to expand device functions — from PSG and video EEG monitoring to EMG
- Powerful possibilities for remote monitoring

NEURON-SPECTRUM 1-4,AM,EPM-NEUROSOFT

NEURON-SPECTRUM-61..65

FRONTLINE EEG SYSTEMS

- 11 to 39 referential EEG channels
- 4 to 8 additional channels for EMG, EOG, ECG and other physiological signals
- Multiple options: PSG, EP, long-term video EEG monitoring, BFB, CFM
- Continuous impedance monitoring during acquisition
- Operating mode selection with a button on the front panel (impedance measurement, monitoring of signal quality before the exam, exam recording)
- Color-coded impedance indication at the amplifier inputs
- Innovative hardware and software solutions for excellent signal quality

NEURON-SPECTRUM-5

NEUROPHYSIOLOGICAL LABORATORY

- 32 referential EEG channels
- 9 additional channels for EMG, EOG, ECG and other physiological signals
- Acquisition button on the front panel
- State-of-the-art techniques of mathematical analysis based on machine learning algorithms for EEG signal processing
- EEG, EMG, EP and PSG — all techniques in a single compact unit

HAND REHABILITATION GLOVES

TJ-OM007-1 TAIJIE

Artificial hand rehabilitation robot gloves with single hand training, which is divided into Left & Right. Equipped with intelligent sensors Comfortable, responsive and real-time sensing.

TJ-OM007-3 TAIJIE

Artificial hand rehabilitation robot gloves with single hand training, which is divided into Left & Right. Equipped with intelligent sensors Comfortable, responsive and real-time sensing

TJ-OM008 TAIJIE

Upgrade Smart rehabilitation robot gloves with both hand training. Equipped with intelligent sensors comfortable, responsive and real-time sensing.

TJ-OM014-8 TAIJIE

An artificial hand rehabilitation robot glove with single-hand training function is divided into left and right parts, and it can achieve single-finger training function. It is equipped with intelligent voice, is comfortable, sensitive and has real-time sensing capability.

TJ-OM016 TAIJIE

An artificial hand rehabilitation robot glove with single-hand training function is divided into two parts - left and right. It can achieve the function of training individual fingers. It can be carried around daily and is convenient to carry. It is comfortable and sensitive to use.

TJ-OM016-1 TAIJIE

An artificial hand rehabilitation robot glove with single-hand training function is divided into two parts - left and right. It can achieve the function of training individual fingers. It is comfortable to use, sensitive, and has real-time sensing capabilities.

HAND REHABILITATION ROBOT SY-HR10A SYREBO

Hand Rehabilitation Robot SY-HR10A is an advanced robotic rehabilitation system designed to enhance hand function recovery through intelligent, customizable therapy. Featuring an upgraded ergonomic design and in- tuitive 9-level adjustable training parameters, it delivers personalized rehabilitation with improved ease of use for both clinicians and patients.

Streamlined & simplified design

Applicable people and departments

Patients with hand dysfunction caused by stroke, brain injury, hand trauma, cerebral palsy, orthopedic surgery, lymphedema after breast cancer treatment, etc.

9 grades adjustable parameter

Adjusting while training

Streamlined & simplified design, easy to operate.

HAND REHABILITATION ROBOT SYREBO

Syrebo hand rehabilitation robot combines soft robotic exoskeleton technology and neuroscience, integrates active training and passive training, covers all stages of hand rehabilitation, helps patients to relearn and recover hand motor functions via series of passive and active exercises to restore self-reliance ability.

Our Robotic Hand Rehabilitation Devices are suitable for every hand dysfunction caused by diseases or injuries, such as stroke, traumatic brain injury, spinal cord injury, Parkinson's disease, hand injury, lymphedema, Alzheimer's disease, cerebral palsy in children, etc. Therefore, its application is distributed in the Rehabilitation, Neurology, geriatrics, pediatrics, and Orthopedics departments in the hospital.

Soft robotic hand extension & flexion

Bilateral mirror training

Immersive interactive games

Strength & coordination evaluation

HAND REHABILITATION ROBOT (BCI) SY-HR08G

✪ PRODUCT FEATURES

Intelligent user Management

Integrate user profile and multi-assessments in one user management, simultaneously checking rehabilitation progress in multiple dimensions.

EEG data tracking technology

Advanced data processing technology enables EEG signal collection smoothly. EEG signal data can be stored and viewed on MATLAB software, providing references for rehabilitation programs and guidance for clinical research.

Indication for Use

Patients with hand dysfunction caused by stroke, brain injury, cerebral palsy, hand trauma, parkinson's disease, lymphedema, alzheimer, etc.

SYREBO®
UPPER LIMB REHABILITATION ROBOT SY-UEA2

Syrebo® Upper Limb Rehabilitation Robot adopts a full-featured mobile chassis and high-precision optical positioning technology, providing users with various effective target-oriented training to enhance upper limb strength, speed, and accuracy, and reshape upper limb functionality.

Multi-dimensional Training

3 training goals 4 training modes

Motor training

- Cover all stages of rehabilitation

Cognition training

- Improve user's cognitive function, enhance neuroplasticity

ADL training

- Restore user's ability of daily living

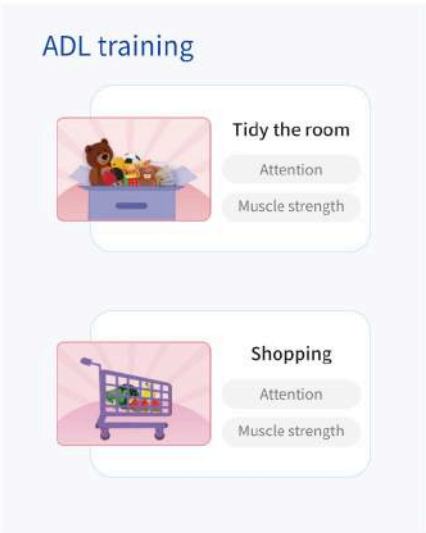

Quantifying Training Process

Intelligent data analysis & evaluation

- Support multi-project training planning

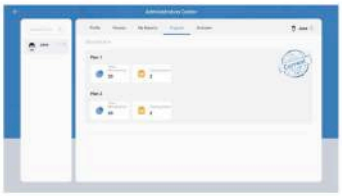

- Combine the evaluation with the training data to quantitatively manage the rehabilitation process

Multi-dimensional feedback

- Speed, strength, range and other parameters are monitored in real-time during training. According to the real-time feedback, the therapist can adjust the rehabilitation training plan in time to achieve closed management of the process.

ACTIVE & PASSIVE TRAINER FOR ARMS AND LEGS SYREBO

It's designed for the rehabilitation of patients with upper and lower limb dysfunction and coordination disorders, and can drive the entire limbs of one or both upper/lower limbs (including shoulders, elbows, wrists, fingers, hips, knees, ankle joints and related muscle groups) to conduct comprehensive exercise training.

✪ FEATURES

- **Automatically generate training reports**

Detailed data helps therapists understand the patient's condition

- **Smart Human-Machine Interface**

10-inch Touchscreen with Voice-guided Interaction

- **All-round safety protection**

Spasm detection/emergency stop protection/intelligent speed regulation program

- **User-friendly design**

Height adjustable / Training radius adjustable

INNOVATIVE DYNAMIC ARM SUPPORT SYREBO

Help people with upper limb dysfunction achieve 270° flexible movement

✪ ASSIST USERS TO PERFORM ADLS TRAINING & OT TRAINING

- ADLs training

Assist users in ADLs training such as eating and grooming.

- OT training

Incorporate therapeutic exercises using small objects such as balls, building blocks, and wooden pegboards.

✪ FEATURES

- 12-level assistance force of desk

- Adjustable fixing clip, fits various types

SMART REHABILITATION MIRROR

Miror therapy box is a valuable tool in rehabilitation, leveraging the power of visual perception to improve motor function and alleviate pain.

1. **Combination of mirror therapy and speech training**
2. **Adjustable angles from 70° to 90°**
3. **An aid of conventional rehabilitation therapy**

04

Gait, Balance & Mobility Training

BALANCE BOARD FERROX

ROCKER BOARDS

✪ HIGHLIGHTS

(1) Art. 250204 - SIMPLE ROCKER BOARD **
- non-slip rubber covering
- dimensions 170 x 60 x 14 h cm

(2) Art. 250210 - ROCKER BOARD ON A HALF-CIRCLE BASE **
- non-slip rubber covering
- dimensions 80 x 60 x 13 h cm

BOBATH WOBBLE BOARD
(3) Art. 250220 dimension Ø 60 x 13 h cm **
- non-slip rubber covering

(4) Art. 250225 dimension Ø 80 x 13 h cm **
- non-slip rubber covering

(5) Art. 111865 - SWEDISH BENCH ** with balance beam
- wooden structure
- dimensions 300 x 35 x 35 h cm

EXERCISE MATS AND MATTRESSES

✪ HIGHLIGHTS

(1) AGGLOMERATE MATS, DENSITY 80 Art. 110910-200 x 100 x 5 h cm
(2) FOAM MATS **
Art. 110686-200 x 100 x 5 h cm
Art. 110691-200 x 100 x 10 h cm
******
(3) MSD-THERAPY MATS-CLOSED CELL STRUCTURE ** Art. 110970-180 x 60 x 1,5 h cm
Art. 110980-180 x 100 x 1,5 h cm

STAIRCASE FERROX

REDUCED LENGTH WALKING RAMP

HIGHLIGHTS

Art. 260357-REDUCED LENGTH STAIRCASE "PONTICELLO"

- Robust steel frame
- Coated with rubber non-slip fabric
- Four 13 cm-high steps
- Platform element: 60 x 60 cm
- Safety side bar
- Heel board
- Dimensions: 182 x 60 x 70 A 97 h cm
- Medical device

STAIRCASE FERROX

STAIRCASE STRAIGHT-LINE OR CORNER

HIGHLIGHTS

Art. 260355-TWO-SIDED COMPACT STAIRCASE "BROOKLYN" STRAIGHT-LINE OR CORNER CONFIGURATION

- coated with rubber, non-slip fabric
- four 15 cm-high steps
- five 13 cm-high steps
- central platform element: 60 x 60 cm
- Safety side bar
- Heel board
- Medical device

- **length in straight-line configuration 310 x 60 cm**
- **length in corner configuration 167 x 199 cm**

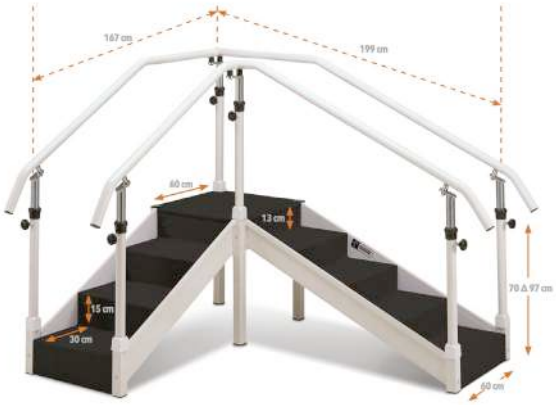

PARALLER BAR FERROX

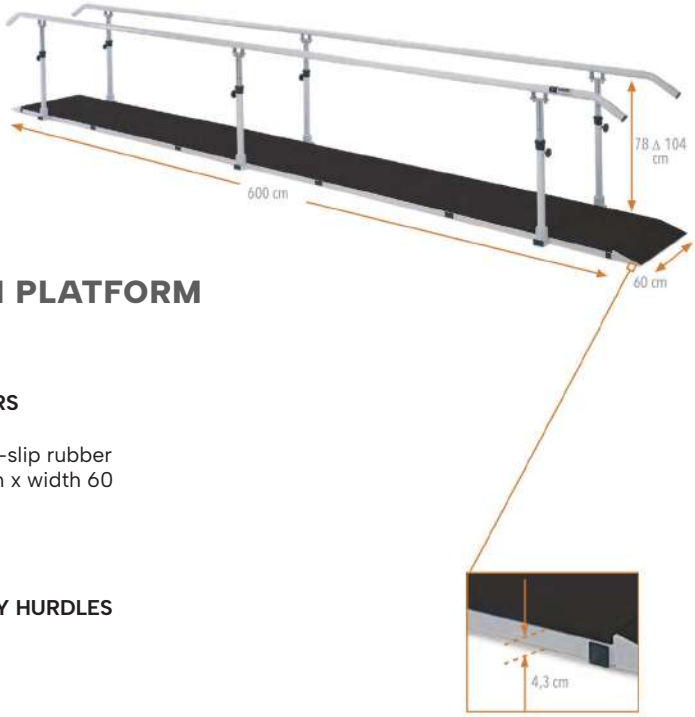

PARALLEL BARS WITH PLATFORM

HIGHLIGHTS

Art. 260212 – 600 CM PARALLEL BARS
- height-only adjustable handrail
- wooden platform covered with non-slip rubber
- external dimensions: length 600 cm x width 60 cm x 78 Δ 104 h cm
- Medical device

OPTIONS:
REFER TO PAGE 85 FOR ACCESSORY HURDLES

PARALLE BAR FERROX

PARALLEL BARS WITH 360 DEGREE PIVOTABLE HANDRAILS
for personalised practice
- wooden platform covered with non-slip rubber
- height adjustment range cm 78 Δ 104
- adjustable width from 36 Δ 87 cm
- Medical device

Available in 3 different lengths:
(1) Art. 260208 250 x 36 Δ 87 x 78 Δ 104 h cm
(2) Art. 260209 350 x 36 Δ 87 x 78 Δ 104 h cm
(3) Art. 260210 400 x 36 Δ 87 x 78 Δ 104 h cm

PARALLER BAR FERROX

FOLDAWAY PARALLEL BARS.
EASY-CLICK
"KLASSIC"

Art. 260216 – FOLDAWAY PARALLEL BARS WITH TULIP WOOD HANDRAIL.
- handrail in highly sturdy tulipwood.
- 140kg (2x70) safe workload
- 15mm stand thickness
- 45 kgs weight
- no decking required
- Ideal for limited available space
- Length: 300 x 65 x 75 Δ 108 h cm
- Medical device

PARALLER BAR FERROX

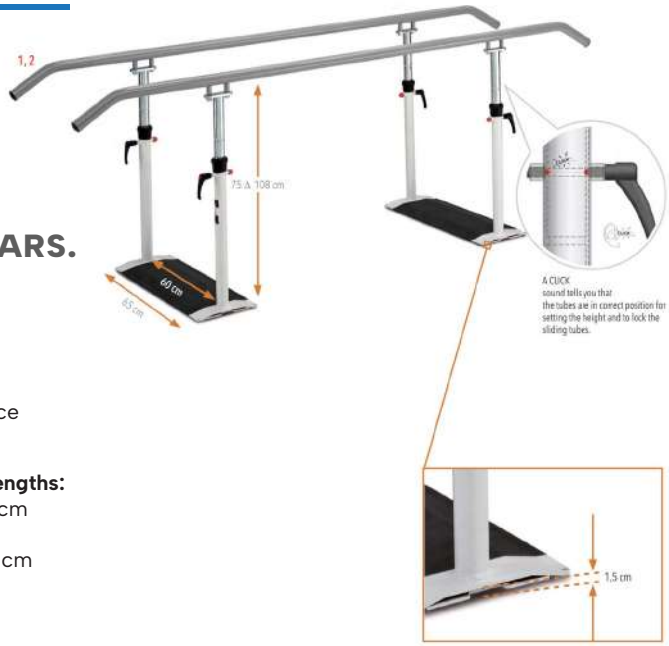

FOLDING PARALLEL BARS.
EASY CLICK

FOLDING PARALLEL BARS
- thickness of base 15 mm
- without walking platform
- designed to easily fold to save space
- Medical device

Available in two different (external) lengths:
(1) Art. 260215 250 x 65 x 75 Δ 108 h cm
- weight 48 kg

(2) Art. 260217 350 x 65 x 75 Δ 108 h cm
- weight 52 kg

PARALLER BAR FERROX

FOLDING PARALLEL BARS.

FOLDING PARALLEL BARS
- thickness of base 30 mm
- without walking platform
- designed to easily fold to save space
- Medical device

Available in two different (external) lengths:
(1) Art. 260218 cm 250 x 65 x 75 Δ 108 h
- weight 40 kg

(2) Art. 260219 cm 350 x 65 x 75 Δ 108 h
- weight 44 kg

STAIR ACCESSORY FERROX

HURDLE COURSES

FIXED-PATTERN PLATFORMS
(1) Art. 260261- FOR PARALLEL BARS 250 cm (Art. 260208)**
- wooden boards to be attached to the sides of parallel bars, including 7 rungs

(2) Art. 260260 - ** FOR PARALLEL BARS 350 cm (Art. 260209)
- wooden boards to be attached to the sides of parallel bars, including 9 rungs

(3) Art. 260221 - SEGMENTED NATURAL** WOOD PLATFORM
Designed for combined use with bags, shapes, rollers
- dimensions 250 x 50 x 6 h cm

ACCESSORIES:
(A) Art. 260233 - ** pvc bag containing pvc pellets dimensions 38x20 cm
(B) Art. 260234 - ** polystyrene foam shape dimensions 38 x 20 x 2 h cm
(C) Art. 260232 - ** PVC sand bag dimensions 38 x 20 cm
(D) Art. 260235 - ** Natural wood roller dimensions Ø 3 x 20 cm

(4) Art. 260222 - ** WEDGE PATHWAY on wooden platform
- equipped with 3 wooden elements + 3 covered polystyrene foam elements
- dimensions 240 x 45 x 8 h cm

(5) Art. 260525- ** MSD STEPPING STONE
The non-slip 18 cm stepping stone is perfectly suited for children group exercises. Combine balance training and motor skill development improvement, with playing fun. It can also be used for foot massage whilst sitting.

BALANCE TRAINING FISIOTECH

ROCKER BOARDS

Varnished wood rocker boards with nonslip covering for balance training and rehabilitation.

SPECIFICATIONS	
MODELS	CODE
With half-circle 170 x 60 x 14 cm (L x W x H) - Max working load 120 kg	1313010
With half-circle 80 x 60 x 13 cm (L x W x H) - Max working load 120 kg	1313020
With half-circle 60 x 40 x 10 cm (L x W x H) - Max working load 120 kg	1313030
With half-circle 40 x 35 x 9 cm (L x W x H) - Max working load 120 kg	1313040
Central fulcrum 60 x 40 x 10 cm (L x W x H) - Max working load 120 kg	1313050

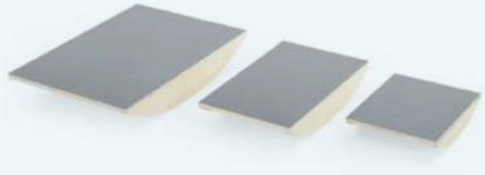

BOBATH WOBBLE BOARDS

Varnished wood Bobath wobble boards with nonslip covering for balance training and rehabilitation.
With central semisphere

SPECIFICATIONS	
MODELS	CODE
Bobath wobble boards - Diameter 60 cm - Height 13 cm - Max load 120 kg	1313060
Bobath wobble boards - Diameter 80 cm - Height 13 cm - Max load 120 kg	1313070

SET OF THREE STEPS

Clear varnished wood steps with nonslip covering. They are suitable for all postural training therapies and are useful to promote proper musculoskeletal function, to work on body alignment, balance and coordination.
Two models with different heights – BIG and SMALL – are available.

SPECIFICATIONS	
MODELS	CODE
SMALL 60 x 60 x 10/15/20 cm (L x W x H) – Max load 180 kg	1313075
BIG 60 x 60 x 30/40/50 cm (L x W x H) – Max load 180 kg	1313076

BALANCE TRAINING FISIOTECH

MOVIN' STEP – CODE 1313151

It can either be used as a step for low-impact cardiovascular training or as a moving base to improve balance and co-ordination while exercising.
An integrated valve enables to adjust the air flow and to choose the correct movement range.

TECHNICAL SPECIFICATIONS	
Length	35 cm
Width	35 cm
Height	7 cm
Recommended Max Load	120kg
Tested max load	200 kg

STABILITY WHEEL – CODE 1313181

This proprioceptive footboard is a valid aid to fitness and rehabilitation to carry out different kinds of exercises to improve balance, muscle tone and posture.

TECHNICAL SPECIFICATIONS	
Diameter	40 cm
Height	9 cm
Recommended max load	120 kg
Tested max load	200 kg

CORE BALANCE - CODE 1313171

It is made of a hard base and a soft green dome, which is removable from the base and inflatable according to individual needs. It is a multi-functional tool, which can be used for different kinds of training, from fitness to post-traumatic knee and ankle rehab.

TECHNICAL SPECIFICATIONS	
Base diameter	47 cm
Base height	25 cm
Dome diameter	40 cm
Dome height	20 cm
Recommended max load	120 kg
Tested max load	200 kg

GAIT TRAINING FISIOTECH

3 mt steel handrails
Code 1311010

3 mt wooden handrails
Code 1311020

FOLDABLE PARALLEL BARS

Powder coated steel structure. Telescopic, height-adjustable, anatomic handrails available in two versions - wooden or powder coated steel. The knobs prevent the loosening and movement of the handrails when used by patients.

TECHNICAL SPECIFICATIONS	
Handrails height adjustment	69-100 cm
Distance between handrails	60 cm
Base width	70 cm
Handrails length	300 cm
Single handrail maximum load	135 kg

MODELS	CODE
3 mt foldable parallel bars with metal handrails	1311010
3 mt foldable parallel bars with wooden handrails	1311020

BALANCE TRAINING FISIOTECH

Code 1313191

DISCO SPORT – CODE 1313191

Ideal for balance and motricity exercises, and for functional skill recovery.

TECHNICAL SPECIFICATIONS	
Diameter	55 cm
Recommended max load	120 kg
Tested max load	200 kg
Color	orange

DISCO DOME – CODE 1313201

Ideal for step and balance exercises. The Disco Dome is made of a hard base and a soft orange disc, which can also be used separately for those who wish to perform more intense balance exercises.

TECHNICAL SPECIFICATIONS	
Diameter	60 cm
Recommended max load	120 kg
Tested max load	200 kg

Code 1313201

NEEDLE PUMP – CODE 1411160

With flexible extension.

Code 1411160

MANUAL PUMP – CODE 1411161

Ideal to inflate medium- and big-sized balls.

Code 1411161

GAIT PARALLEL BAR FISIOTECH

6 mt steel handrails Code 1311140

2 mt steel handrails Code 1311120

3 mt steel handrails Code 1311110

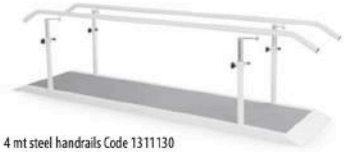

4 mt steel handrails Code 1311130

3 mt parallel bars wooden handrails Code 1311100

Handrails height adjustment system.

Powder-coated steel structure with wooden platform with nonslip covering and convenient access ramps. Telescopic, height- and width-adjustable, anatomic handrails available in two versions - wooden or powder coated steel. The knobs prevent the loosening and movement of the handrail when used by patients.

TECHNICAL SPECIFICATIONS	
Handrails height adjustment	65-100 cm
Distance between handrails adjustment	40-80 cm
Platform width	59 cm
Base width	70 cm
Handrails length	200/300/400/600 cm
Single handrail maximum load	135 kg

MODELS	CODE
3 mt parallel bars with wooden handrails	1311100
3 mt parallel bars with steel handrails	1311110
2 mt parallel bars with steel handrails	1311120
4 mt parallel bars with steel handrails	1311130
6 mt parallel bars with steel handrails	1311140

GAIT PARALLER BAR FIOSIOTECH

Powder-coated steel structure with wooden platform with nonslip covering and convenient access ramps. Telescopic height adjustable, anatomic powder coated steel handrails. The knobs prevent the loosening and movement of the handrail when used by patients.

TECHNICAL SPECIFICATIONS	
Handrails height adjustment	65-100 cm
Platform width	59 cm
Base width	70 cm
Length of the two platforms	200-270 cm
Single handrail maximum load	135 kg

MODELS	CODE
Corner parallel bars with steel handrails	1311150

PARALLER ACCESSORY FISIOTECH

PATIENT STABILISER – CODE 1311200

The patient stabiliser may be used on all parallel bars with platform to support the patient during exercises. The patient stabiliser is equipped with four stoppers mountable on the ends of the handrails and a joining plate to connect a second patient stabilizer in case it is purchased. The double patient stabiliser helps the patient when reversing the direction.

OBSTACLES / DIVIDER BOARD – CODE 1311221

The obstacle / divider board set is made of eight varnished wood obstacles with magnet.
Dimensions 65 x 13 x 1,5 cm

CONCAVE / CONVEX PLATFORMS – CODE 1311230

Made of two parts creating a concave or convex platform. Dimensions 290 x 46 x 8,5 cm
Not suitable for parallel bars code 1311120 and 1311150.

BALANCE CUSHION FISIOTECH

DISC'O'SIT – CODE 1417131

Disc'o'Sit sitting cushion for a correct posture. When positioned on a chair, it relieves the backbone, thanks to the movement it provides. The Disc'o'Sit is useful in functional training as well.
Suitable for floor exercises to improve coordination, reflexes and stability.

TECHNICAL SPECIFICATIONS	
Recommended max load	120 kg
Tested max load	200 kg

MODELS	COLOURS	CODE
∅ 39 cm	Blue	1417131

ACCESSORIES – CODE 1417132

Cover with zip useful when the Disc'o'Sit is used as a sitting cushion. Colours: BLUE

PARALLEL ACCESSORY FISIOTECH

PLATFORM WITH DIVIDERS – CODE 1311250

Create gait-training courses by putting accessories in the dividers. Dimensions 290 x 50 x 3 cm
Not suitable for parallel bars code 1311120 and 1311150.

MOTOR TRAINING SANDBAGS – CODE 1311260

Dimensions 38 x 20 cm

MOTOR TRAINING PVC BAGS – CODE 1311270

Dimensions 38 x 20 cm

WOODEN ROLLER – CODE 1311280

Length 20 cm ∅ 3 cm

WOODEN STICK – CODE 1311290

Length 20 cm ∅ 1 cm

BALANCE MAT ACCESSORY FISIOTECH

BALANCE PAD – CODE 1414221

Smooth surface ideal for balance training. The thickness of 6 cm makes the product unstable. This, added to the yielding foam the pad is made of, causes a constant challenge to the body in maintaining balance and stabilising the joints. Suitable for: pilates, fitness, yoga, physiotherapy and rehabilitation, club sport and balance training.

Code 1414221

MODELS	COLOURS	WEIGHT	CODE
41 x 50 x 6 cm	Blue	0,68 kg	1417131

BALANCE PAD ELITE

The AIREX® BALANCE PAD ELITE differs from the BALANCE PAD in that it has a honeycomb structure on the top and on the bottom.

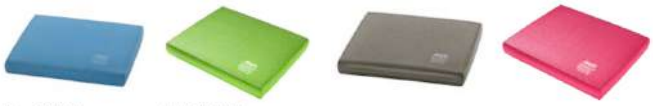

Code 1414231 Code 1414232 Code 1414233 Code 1414234

MODELS	COLOURS	WEIGHT	CODE
41 x 50 x 6 cm	Blue	0,68 kg	1414231
41 x 50 x 6 cm	Kiwi	0,68 kg	1414232
41 x 50 x 6 cm	Lava	0,68 kg	1414233
41 x 50 x 6 cm	Pink	0,68 kg	1414234

BALANCE PAD XL – CODE 1414251

The AIREX® BALANCE PAD XL is same as BALANCE PAD ELITE but with different dimensions.

Code 1414251

MODELS	COLOURS	WEIGHT	CODE
98 x 41 x 6 cm	Blue	1,4 kg	1414251

BALANCE BEAM – CODE 1414241

Product developed especially for clinical balance and proprioception exercises. It is based on the shape of a conventional balance beam and used mainly in physiotherapy to regain walking and foot functions.

Code 1414241

MODELS	COLOURS	WEIGHT	CODE
160 x 24 x 6 cm	Blue	0,99 kg	1414241

GAIT STAIR CLIMBING FISIOTECH

Powder coated steel structure, zinc-chromate sliding parts. Telescopic, height-adjustable, powder coated steel anatomic handrails. The knobs prevent the loosening and movement of the handrail when used by patients. Nonslip PVC covered closed steps.

TECHNICAL SPECIFICATIONS	
Handrails adjustment	manual 60-100 cm
Step width	56 cm
Step depth	30 cm
Step height – 4-step flight	13 cm
Step height – 3-step flight	16 cm
Single handrail maximum load	135 kg

MODELS	CODE
Single flight 4-step stairs	1312010
Single flight 3-step stairs	1312020

ACCESSORIES	CODE
Inclined ramp dimensions 170 x 49 cm	1312200

GAIT STAIR CASE FISISOTECH

Powder coated steel structure, zinc-chromate sliding parts. Telescopic, height-adjustable, powder coated steel anatomic handrails. The knobs prevent the loosening and movement of the handrail when used by patients. Nonslip PVC covered closed steps in two different heights. The stairs can be set in a straight position as well as in a corner position.

TECHNICAL SPECIFICATIONS	
Handrails adjustment	manual 60-100 cm
Step width	56 cm
Step depth	30 cm
Step height – 4-step flight	13 cm
Step height – 3-step flight	16 cm
Single handrail maximum load	135 kg

MODELS	CODE
Two flight stairs	1312030

ACCESSORIES	CODE
Inclined ramp dimensions 170 x 49 cm	1312200

BALANCE TRAINING DUKON

SOMATOSENSORY VIBROACOUSTIC FEEDBACK SYSTEM

The somatosensory vibroacoustic feedback system can collect heart rate and blood oxygen saturation from the human body. After processing by the system, it can detect the patient's stress level. Based on different conditions, it selects corresponding training and treatment plans. It converts low-frequency signals of 16-15Hz into vibrations, which are transmitted through "bone conduction" and provide dual stimulation to the psychological and physiological aspects. This activates the central nervous system in a short period, improving symptoms such as insomnia, depression, anxiety

✪ FUNCTIONAL INTRODUCTION:

- Combines stress assessment with training
- Provides multiple physiological signal feedbacks.
- Automatically stores data from previous stress assessments and regulation training
- Automatically generates graphical reports
- Rich psychological and audio-visual training materials.
- Zigbee wireless transmission

✪ INDICATIONS:

- Brain and Nerve Rehabilitation
- Regulate Emotions and Manage Stress
- Improve Physical and Mental Symptoms or Somatic Symptoms
- Alleviate Insomnia, Anxiety, Depression, and Pain
- Improve Peripheral Circulation and Prevent Diabetes
- Potential Development, Enhance Attention and Memory, Nerve Damage and Paralysis, etc

BALANCE FUNCTION TESTING AND TRAINING SYSTEM

The Dukon Balance Function Testing and Training System serves as an effective clinical diagnostic and treatment tool. It can detect, display, and analyze real-time changes in the center of gravity during upright standing and sitting positions, as well as the slight finger movements, assisting doctors in diagnosing abnormalities in human balance functions. At the same time, it helps patients correct and train their balance functions through game feedback, and allows therapists to grasp the patient's training situation in a timely manner, adjusting the training plan accordingly.

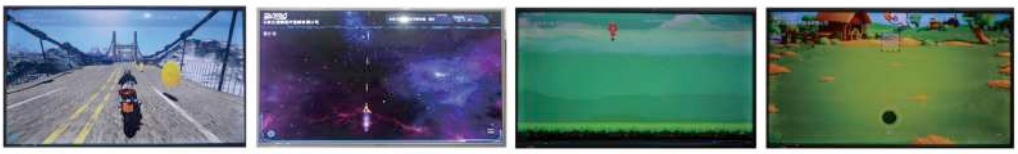

✪ CLINICAL APPLICATIONS

- Functional assessment and auxiliary diagnosis for
- conditions such as brain injury, spinal cord injury, cerebral
- palsy, vertigo, Parkinson's disease, senile dementia, writer's cramp, and orthopedic joint diseases, as well as
- rehabilitation training for the balance function of patients with these conditions.

DYNAMIC AND STATIC BALANCE EVALUATION ZEPU

ZEPU-AI10
Dynamic and static balance evaluation and training system

FEATURES

- It uses robotic technology to integrate dynamic and static balance training and assessment.
- Static balance assessment captures and analyzes the movement trajectory of the patient's center of gravity, that is the center of gravity trajectory map.
- Dynamic balance assessment assesses the patient's balance function by recording changes in the patient's inclination on a force plate.
- Equipped with intelligent software system.
- Combined with situational interaction.

ZEPU-A110 TECHNICAL SPECIFICATIONS	
Size (mm):	2743×1145×1464(L×W×H)
Weight:	205kgs

ROBOTIC ASSISTANCE GAIT TRAINING HAOBRO

S720MODEL
Robot-assisted gait training system

FEATURES

1. **Active and passive training mode**
   It could set the guiding force: it could adjust the gait offset; it could detect the patient's spasticity symptoms; it could adjust the patient's tolerance sensitivity.

2. **Adjustable parameters**
   It could be adjusted from 0.1km/h to 3.5km/h, with accuracy tolerance of ±5% and uniformity tolerance of 1m/s. The hip joint movement angle and offset, knee joint movement angle and offset, thigh length adjustment range and calf length adjustment range are all adjustable.

3. **Emergency protection**
   - Manual emergency stop switch.
   - Spasm protection.
   - Detection of foreign objects on treadmill and emergency stop.

4. **Game training**
   You can choose training games that can display information about the whole process of patient training.

5. **Weight reduction support device load resistance**
   The weight reduction support device should be able to withstand 135kg of load operation.

6. **Display**
   The gait curve will display real-time data on the hip and knee joints of the patient's right and left legs during movement.

ZEPU-KB101-102

SWING GAIT TRAINER

FEATURES

- 3D scene interaction with standing and walking training equipment.
- Patients can observe, imitate and practice repeatedly according to their own situation.
- Real-time training parameter feedback, patients can easily grasp their own training situation.

KB101/102 SPECIFICATIONS	
Size (mm):	1050×800×1600(L×W×H)
Weight:	62.5kgs

ZEPU-KB101

ZEPU-KB102

ZEPU-KB201/202

Swing gait trainer for children

KB101/102 SPECIFICATIONS	
Size (mm):	1120×700×1160 (L×W×H)
Weight:	39kgs

ZEPU-KB101

ZEPU-KB202

GAIT TRAINING ROBOT ZEPU

AI REHABILITATION ROBOT SERIES

Gait training and evaluation system

STAIR CLIMBING ZARYA

«Alter Step» Dynamic Stair Trainer can be equipped with one or two ramps for patients in wheelchairs. It is easy to use and comfortable for patients with impaired mobility. The simulator can be used in rehabilitation departments and centres, health care institutions, nursing homes, neuro and cardiac rehabilitation centers.

«ALTER STEP» DYNAMIC STAIR TRAINER:

- Promotes the patient motivation,
- Helps to overcome the psychological barrier of
- making the first step,
- Saves the therapist's time and efforts,
- Can be used by the patient for self-directed training

VERSIONS AVAILABLE:

- «Alter Step» Dynamic Stair Trainer with a short ramp
- (600 mm),
- «Alter Step» Dynamic Stair Trainer with a long ramp
- (900 mm),
- «Alter Step» Dynamic Stair Trainer with two ramps (600 mm each).

WALKING STIMULATOR 2 ZARYA

«Imitron» Walking Simulator is available in two versions:
For adult patients and for children. Both versions can be equipped with an electronic measurement unit to measure walking speed, count steps and record the workout duration.
OPERATION:
With the help of hand movements, the patient synchronously moves the structural elements supporting his/her lower limbs. The torso stabilization system helps to maintain an upright position, and the patient moves his/her lower limbs with help of hand work, due to which a walking process is simulated.
«Imitron» Walking Simulator allows exercising leg muscles
and joints in a passive mode. The upper limbs and the shoulder girdle also work actively. The muscles of the back and abdomen are exercised, the body and pelvis turn and bend.
The simulator can be used by patients with the thoracic
and cervical spinal cord injuries.
Additional supports are provided for such patients.

GENERAL INDICATIONS:

- hemi-, para- and tetraparesis after brain diseases or spinal cord injuries,
- leg paralysis and paresis,
- cerebral palsy and other congenital neuromuscular disorders,
- strokes.

EFFECTS:

- reducing the risk of osteoporosis,
- dynamic load on bones and muscles (exercising),
- prevention of joint instability and osteoarthritis,
- improved blood circulation,
- respiratory system stimulation,
- prevention of urinary tract infections,
- improving the emotional and mental state of the
- patient.

THE STANDARD SUPPLY INCLUDES:

- 1 walking simulator,
- 1 support for the lumbar spine with a belt retainer,
- 2 knee straps.

ADDITIONAL OPTIONS:

- electronic step counter (built-in),
- 2 additional side supports,
- 1 additional back support,
- 1 additional chest support,
- special gloves.

BALANCE ZARYA

«Balance Master» Simulator is used to perform complex rehabilitation exercises in a vertical position. It corrects errors when transmitting a signal from the brain to the muscles.
The simulator prepares the patient for making the first step.
It provides gradual adaptive training for the correct movement patterns. The simulator is equipped with an electric lifting device and an auxiliary belt to verticalize the patient from a sitting position.

APPLICATIONS:

- Recovery from brain injuries and spinal cord injuries, – Stroke recovery,
- Maintaining the muscle tone in elderly patients,
- Treatment of patients with Parkinson's disease,
- Symptomatic therapy for multiple sclerosis.

EFFECTS:

- Learning correct movement patterns,
- Spasticity reduction,
- Balance training,
- Movement rehabilitation,
- Stimulation of the gastrointestinal and urinary systems,
- Osteoporosis prevention.

VERSION
STANDARD CONFIGURATION 1:

- Balance Master Simulator with mechanical lifting device.

STANDARD CONFIGURATION 2:

- Balance Master Simulator with electric lifting device.

ADDITIONAL OPTIONS:

- Motion sensor + bio-feedback software,
- Additional leg support,
- Additional head and back support.

* Supplied upon request are: Laptop, monitor, monitor stand, HDMI cable (not rated as medical equipment).

AXELERO GAIT AND BALANCE -MED INMED

AXELERO
GAIT & BALANCE
A device for training gait pattern disturbances and balance

AXELERO Gait & Balance is the most advanced treadmill from all AXELERO products of Meden-Inmed. Design experience allowed us to create a product used not only for motor rehabilitation or training with the use of biofeedback, but also for the objective registration of spatial and temporal parameters of gait and run of the patient.

FEATURES

- **Integrated Posturographic Plate:** Built directly underneath the running belt, this platform embeds high-precision strain gauge sensors to instantly locate the patient's Center of Pressure (CoP) and calculate foot load distribution.
- **Low-Suspension Belt:** The ultra-low profile design makes it easy and safe for highly impaired or elderly patients to step onto the device.
- **Fully Adjustable Handrails:** Robust safety handrails line the entire length of the treadmill and can be modified in both width and height to securely accommodate pediatric or adult patients.
- **Micro-Speed Regulation:** The quiet drive system delivers highly stable, precise speed adjustments starting at a very slow 0.2 km/h up to 10 km/h, preventing sudden jerks during acceleration.

TECHNICAL INFORMATION

Dimensions (l x w x h) [cm]:	256 x 78 x 195
Maximum acceptable weight load [kg]:	160
Handrail width [cm]:	43 - 69
Handrail height [cm]:	66 - 94,5
Display size [“]:	43
Belt's dimensions [cm]:	140 x 52
Utility area dimensions [cm]:	99 x 50
Belt's speed regulation range [km/h]:	0,2 - 10
Weight of the device [kg]:	200
Class of the device:	I, typ B

ELEVEO-MED INMED

Dynamic partial weight bearing gait therapy device Eleveo is a device intended to accomplish dynamic patient support on a treadmill or firm surfaces. A perfect solution for training patients in a wide range of gait disorders.

Used in:
- Rehabilitation.
- Gait reeducation.

Used for:
- Therapeutic and diagnostic purposes (training balance and gait).
- Ideal for working with: neurological patients orthopedic patients.

✪ FEATURES:
- Battery-powered electric height adjustment (charged from a 230V wall outlet).
- Two-point suspension with pelvis positioning and front-back inclination using 4 belts.

✪ KEY CLINICAL APPLICATIONS:
- Neurological Rehabilitation:
- Orthopedic Recovery:
- Pediatric and Adult Care
- Multidirectional Training
- COVID-19 Recovery

PELVIC TUTOR-MED INMED

PelvicTutor not only provides information about the level of the pelvic floor muscles contraction, but also gives insight into training progress. The device is used for the general assessment of the efficiency of the superficial layer of the pelvic floor muscles, and for determining the training, that aims to isolate the work of the pelvic floor muscles from other muscle groups or to make the patient aware of the importance of the proper work of the pelvic floor muscles in the context of their health and well-being.

✪ APPLICATIONS:
- Prophylaxis of pelvic floor muscle dysfunction.
- Supporting of the urinary and faecal incontinence treatment.
- Strengthening of the pelvic floor muscles.
- Education of the elderly in the field of pelvic floor muscle dysfunction.
- Training and education of people for whom vaginal and/or rectal PFM training is contraindicated or impossible.
- Stabilization training of the pelvic floor muscles.
- Training of the pelvic floor muscles of women after childbirth.
- Prophylaxis and support in the treatment of male erectile dysfunction.

✪ FEATURES:
- Non-Invasive Biofeedback
- Highly Adjustable Design
- Position Reproducibility
- Proprietary Software
- Inclusive Application

GAIT TRAINER-MSS402-CONFYCARE

MSS402
Gait Trainer - Medical Version

- Three flexible modes: Wheelchair – Standing Training – Gait Training
- Equipped with medical-grade casters, the device can be easily moved across different settings within healthcare institutions, overcoming spatial limita- tions for more versatile rehabilitation training.

✪ SPECIFICATIONS:

- The optimized servo control system and symmetric linkage mechanism enable coordinated movement of the hip, knee, and ankle joints, ensuring smooth and natural motion while enhancing training safety and comfort.
- Intuitive LCD Control Panel: Equipped with a high-definition LCD panel featuring six step training buttons and four posture adjustment buttons for upright, seated, and reclined positions. Users can set training duration and walking distance, providing an intuitive and user-friendly experience tailored to different rehabilitation stages.
- Customizable Stride and Speed Settings: Offers three adjustable stride lengths (10cm/4'', 15cm/6'', 20cm/7.9'') and three walking speed levels (low, medium, high), accommodating patients of various heights and body types to ensure personalized and effective rehabilitation training.
- Foldable Foot Pedals for Easy Access: Features one-touch foldable foot pedals to free up space for patients to get on and off wheelchairs conveniently. The anti-slip and adjustable design enhances safety during rehabilitation sessions.
- Ergonomic Knee Support Bracket: Designed with a rotatable knee support bracket, which allows precise height and depth adjustments to match individual patient needs, ensuring optimal knee alignment and maximum comfort.
- Equipped with medical-grade casters, it allows rehabilitation training to break through spatial limitations and move freely anytime, anywhere.
- Adjustable Ergonomic Seat:
- Seat cushion made of high-quality, durable, and easy-to-clean medical-grade PVC with a wear resistance of up to 150,000 cycles. High-density sponge filling ensures long-term durability without deformation.
- Seat depth adjustable within 0-7cm/2.8'', and backrest reclinable between 0°-40° to accommo- date both step training and relaxation needs.
- Adjustable armrest height and length provide stable support, enhancing comfort and safety during training.
- High-Capacity Lithium Battery:Built-in high-capacity lithium battery provides at least 8 hours of continuous operation, ensuring all-day rehabilitation training without frequent recharging. Load Capacity: 130kg/287lbs
- Warranty: 3 years
- Safety Standards Compliance: IEC 60601-1:2005+A1:2012+A2:2020□EN 60601-1:2006+A1: 2013+A12:2014+A2:2021□IEC62133

GAIT TRAINER-MSS801-CONFYCARE

MSS801
Gait Trainer - Home Version

- Three flexible modes: Wheelchair – Standing Training – Gait Training
- Equipped with medical-grade casters and upholstered with nylon fabric, the device can be easily moved across different settings within healthcare institutions, overcoming spatial limitations for more versatile rehabilitation training.

SPECIFICATIONS:

- The optimized servo control system and symmetric linkage mechanism enable coordinated movement of the hip, knee, and ankle joints, ensuring smooth and natural motion while enhancing training safety and comfort.
- Intuitive LCD Control Panel: Equipped with a high-definition LCD panel featuring six step training buttons and four posture adjustment buttons for upright, seated, and reclined positions. Users can set training duration and walking distance, providing an intuitive and user-friendly experience tailored to different rehabilitation stages.
- Customizable Stride and Speed Settings: Offers three adjustable stride lengths (10cm/4'', 15cm/6'', 20cm/7.9'') and three walking speed levels (low, medium, high), accommodating patients of various heights and body types to ensure personalized and effective rehabilitation training.
- Foldable Foot Pedals for Easy Access: Features one-touch foldable foot pedals to free up space for patients to get on and off wheelchairs conveniently. The anti-slip and adjustable design enhances safety during rehabilitation sessions.
- Ergonomic Knee Support Bracket: Designed with a rotatable knee support bracket, which allows precise height and depth adjustments to match individual patient needs, ensuring optimal knee alignment and maximum comfort.
- Adjustable armrest height and length provide stable support, enhancing comfort and safety during training.
- High-Capacity Lithium Battery:Built-in high-capacity lithium battery provides at least 8 hours of continuous operation, ensuring all-day rehabilitation training without frequent recharging. Load Capacity: 130kg/287lbs
- Warranty: 3 years
- Safety Standards Compliance: IEC 60601-1:2005+A1:2012+A2:2020□EN 60601-1:2006+A1: 2013+A12:2014+A2:2021□IEC62133

GAIT TRAINER-MSS802-CONFYCARE

MSS802
Gait Trainer – Professional Version

- Three flexible modes: Wheelchair – Standing Training – Gait Training
- Omni-directional wheel design for 360° maneuverability, enabling seamless indoor and outdoor navigation.

✪ SPECIFICATIONS:

- The optimized servo control system and symmetric linkage mechanism enable coordinated movement of the hip, knee, and ankle joints, ensuring smooth and natural motion while enhancing training safety and comfort.
- Intuitive LCD Control Panel: Equipped with a high-definition LCD panel featuring six step training buttons and four posture adjustment buttons for upright, seated, and reclined positions. Users can set training duration and walking distance, providing an intuitive and user-friendly experience tailored to different rehabilitation stages.
- Customizable Stride and Speed Settings: Offers three adjustable stride lengths (10cm/4'', 15cm/6'', 20cm/7.9'') and three walking speed levels (low, medium, high), accommodating patients of various heights and body types to ensure personalized and effective rehabilitation training.
- Foldable Foot Pedals for Easy Access: Features one-touch foldable foot pedals to free up space for patients to get on and off wheelchairs conveniently. The anti-slip and adjustable design enhances safety during rehabilitation sessions.
- Ergonomic Knee Support Bracket: Designed with a rotatable knee support bracket, which allows precise height and depth adjustments to match individual patient needs, ensuring optimal knee alignment and maximum comfort.
- 360° Omni-Directional Wheels: Equipped with full-range swivel casters, enabling smooth and flexible movement across indoor and outdoor environments, making rehabilitation training unrestricted by space.
- Adjustable Ergonomic Seat:
- Seat cushion made of high-quality, durable, and easy-to-clean medical-grade PVC with a wear resistance of up to 150,000 cycles. High-density sponge filling ensures long-term durability without deformation.
- Seat depth adjustable within 0-7cm/2.8'', and backrest reclinable between 0°-40° to accommo- date both step training and relaxation needs.
- Adjustable armrest height and length provide stable support, enhancing comfort and safety during training.
- High-Capacity Lithium Battery:Built-in high-capacity lithium battery provides at least 8 hours of continuous operation, ensuring all-day rehabilitation training without frequent recharging. Load Capacity: 130kg/287lbs
- Warranty: 3 years
- Safety Standards Compliance: IEC 60601-1:2005+A1:2012+A2:2020□EN 60601-1:2006+A1: 2013+A12:2014+A2:2021□IEC62133

STANDING TRAINER-MST402-CONFYCARE

MST402
Standing Trainer

- Two flexible modes: Wheelchair – Standing Training
- Equipped with medical-grade casters, the device can be easily moved across different settings within healthcare institutions, overcoming spatial limitations for more versatile rehabilitation training

SPECIFICATIONS:

- Intuitive LCD Control Panel: Equipped with a high-definition LCD panel featuring four step training buttons and four posture adjustment buttons for upright, seated, and reclined positions. Provide an intuitive and user-friendly experience tailored to different rehabilitation stages.
- The adjustable footrest supports an angle range of 0° to 16°.
- Equipped with medical-grade casters, it allows rehabilitation training to break through spatial limitations and move freely anytime, anywhere.
- Featuring a user-friendly adjustable seat: The cushion is made from high-quality, durable, and easy-to-clean medical PVC, with a wear resistance of up to 150,000 cycles. The seat is filled with high-density foam, ensuring durability and maintaining its shape. The seat supports 0-7cm/2.8'' of front-to-back adjustment, and the backrest offers a multi-angle recline from 0° to 40°, meeting various needs for standing training, relaxation, and other uses.
- Adjustable armrest height and length provide stable support, enhancing comfort and safety during training.
- High-Capacity Lithium Battery:Built-in high-capacity lithium battery provides at least 8 hours of continuous operation, ensuring all-day rehabilitation training without frequent recharging. Load Capacity: 130kg/287lbs
- Warranty: 3 years
- Safety Standards Compliance: IEC 60601-1:2005+A1:2012+A2:2020□EN 60601-1:2006+A1: 2013+A12:2014+A2:2021□IEC62133

MSR-BASE -MEDISTAIR

Basic Training Stair
MSR-BASE
MSR-BASE-R
(R indicates the software version)

STANDING TRAINER-MST802-CONFYCARE

MST802
Standing Trainer

- Two flexible modes: Wheelchair – Standing Training
- Equipped with medical casters, it allows for 360° flexible steering, ensuring smooth mobility in both indoor and outdoor environments.

✪ SPECIFICATIONS:

- Intuitive LCD Control Panel: Equipped with a high-definition LCD panel featuring four step training buttons and four posture adjustment buttons for upright, seated, and reclined positions. Provide an intuitive and user-friendly experience tailored to different rehabilitation stages.
- The adjustable footrest supports an angle range of 0° to 16°.
- Equipped with omni-directional casters, it provides smooth mobility in both indoor and outdoor environments, allowing rehabilitation training to break through spatial limitations and move freely anytime, anywhere.
- Featuring a user-friendly adjustable seat: The cushion is made from high-quality, durable, and easy-to-clean medical PVC, with a wear resistance of up to 150,000 cycles. The seat is filled with high-density foam, ensuring durability and maintaining its shape. The seat supports 0-7cm/2.8'' of front-to-back adjustment, and the backrest offers a multi-angle recline from 0° to 40°, meeting various needs for standing training, relaxation, and other uses.
- Adjustable armrest height and length provide stable support, enhancing comfort and safety during training.
- High-Capacity Lithium Battery:Built-in high-capacity lithium battery provides at least 8 hours of continuous operation, ensuring all-day rehabilitation training without frequent recharging. Load Capacity: 130kg/287lbs
- Warranty: 3 years
- Safety Standards Compliance: IEC 60601-1:2005+A1:2012+A2:2020□EN 60601-1:2006+A1: 2013+A12:2014+A2:2021□IEC62133

MSR-PRO-Medistair

Advanced Training Stair
MSR-PRO
MSR-PRO-R
(R indicates the software version)

05

Rehabilitation Robotics & Advanced Systems

LOWER LIMBS EXOSKELETO ROBOTIC DUKON

LOWER LIMB EXOSKELETON ROBOT

The lower limb exoskeleton robot, designed based on bionics and ergonomics, is an external stent system that supports human weight and can provide power support to help patients improve limb function and motor function.
The lower limb exoskeleton robot is composed of a series of joints driven by motors, which can simulate human movement and carry out meaningful communication and interaction with the human body, helping patients train limb function, maximize the recovery of walking function, and improve quality of life.

✪ PRODUCT ADVANTAGES

- The thigh, calf and stride height can be adjusted to better fit the patient's body structure
- The patient's movement trajectory can be recorded during use, gait assessment can be performed, and planning and prediction can be performed
- Load more than 100kg, suitable for the vast majority of patients
- With anti-rollover, fault alarm, emergency stop button, can ensure the safety of patients
- The use of environmentally friendly materials, simple shape, long-term use without deformation

PNEUMATIC REHABILITATION ROBOT

Pneumatic rehabilitation robot is an intelligent training device developed and produced by our company based on computer technology. It adopts bionic structural devices and the combination of sensing signals, and is used for the rehabilitation of hand joint function and overall body function rehabilitation. Can achieve a combination of hand function and whole-body activating massage.

✪ PRODUCT ADVANTAGES

- Combining hand function with full-body massage
- Designed with ergonomics in mind, the air-powered gloves and mirror gloves fit the hand
- closely
- Prescription mode and custom mode are available for selection, with various modes suitable for different patients
- By point-touch imaging on the five fingers, you can train for single or multi-finger
- Multiple modes and parameters can be combined
- Various models are suitable for various grades of hospitals or individuals

FIZYOWALK-1000 -FIZYOMED

HIGHLIGHTS

- Electromechanical gait system
- Special design for patients who have lost the ability to walk and have a walking disorder
- Ability to walk patients in a natural and physiological walking pattern
- Ability to dynamically adjust to patient weight
- Fixing the patient posture
- Motivating the patient in different virtual platforms with an increased feedback system, providing constructive functional feedback
- Adjustable supported or unsupported walking options
- Touch-operated and easy-to-use control panel
- Patient self-viewing monitoring screen with a high-definition camera
- Ability to use it as a normal treadmill
- Can be added to the treadmill, slow walking options for very slow speeds
- Ability to register a trackable patient • Stopping for emergencies

TECHNICAL SPECIFICATIONS	
Güç Girişi / Power Supply	220/380 V 50/60 Hz Motor(engine): 3
Hasta Taşıma Kapasitesi/ Patient Carrying Capacity	200kg
Robotik Yürüme Ortezinin hızı / The speed of Robotic Walking Orthosis	0,1 - 6 km/saat
Kontrol ekranı / Control monitor	Dokunmatik(Touch-operated) 7" Panel
Monitor + Bilgisayar (Monitor + Computer)	32" All in One
Sistem Ağırlıgı / System Weight	430 kg
Boyu / Length	225 cm
Rampa boyu / Ramp length	100 cm
Eni / Width	115 cm
Yüksekliği / Height	300 cm
Opsiyonel Aksesuar / Optional Accessories	Fizyowalk S
Sertifikalar / Certificates	EN ISO 13485:2016
Garanti / Guarantee	2 Yıl

AI REHABILITATION ROBOT SERIES ZEPU

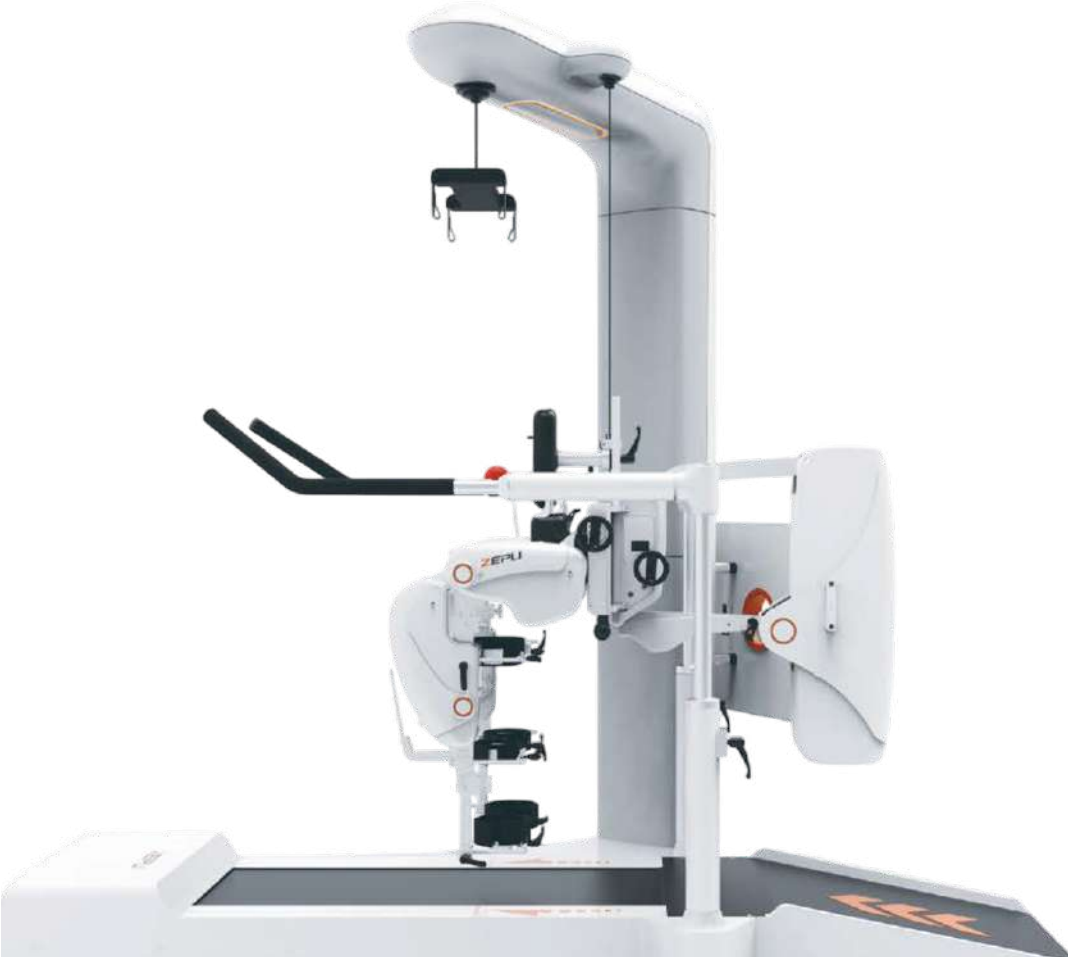

ZEPU -X6&8

Lower limbs feedback training and evaluation system

ZEPU-X6

ZEPU-X8

FEATURES

- Super early functional gait training.
- Situational interactive biofeedback, quantifiable data evaluation.
- Lying, sitting, standing a variety of position change, prevent long-term bed and reduced movement caused by complications.
- Efficient repetitive and precise training.

ZEPU-X6/8 TECHNICAL SPECIFICATIONS	
Size (mm):	2750x1100x2350 (LxWxH)
Weight:	205kgs/210kgs

ZEPU-AI1

FEATURES

- Five axis linkage technology.Autonomous and controllable, adaptive perception change, and automatic matching of human motion.
- Dynamic weight loss and longitudinal center of gravity driven augmenta- tion. Providing gait therapy that best fits the physiological characteris- tics of the human body. Guidance can be adjusted in real time.
- Provide patients with three modes of free switching:passive, assisted and active.
- Human-computer interactive training. Perceiving subtle changes of patients, improves the recovery effect in virtual reality.

ZEPU-AI1 TECHNICAL SPECIFICATIONS	
Size (mm):	2960x1570x2650(LxWxH)
Weight:	600kgs

ZEPU-AI2

FEATURES

- Space transmission.
- 6-DOF manipulator.
- Both left and right. Exclusive upgrade of left and right arm side change technology.
- Strength according to the actual needs of the upper arm and the lower arm.

ZEPU-A12 TECHNICAL SPECIFICATIONS	
Size (mm):	1000x880x(1065-1465) (LxWxH)
Weight:	60kgs

ZEPU-AI3

Lower limbs feedback training and evaluation system

FEATURES

- AI intelligent learning.
- Gait walking training.
- Lying, sitting, standing position.
- Panoramic sound entertainment enjoy rehabilitation.

ZEPU-A13 TECHNICAL SPECIFICATIONS	
Size (mm):	2500x830x1240(LxWxH)
Weight:	265kgs

ZEPU-AI4

Multi-joint isokinetic training and evaluation system

FEATURES

- It covers 10 training modes and provides a "one-stop"full cycle service for musculoskeletal rehabilitation.
- Magnetic adsorption technology.
- Six available extenders.
- Human-computer interactive training.

ZEPU-A14 TECHNICAL SPECIFICATIONS	
Size (mm):	740x540x(1045-1445) (LxWxH)
Weight:	50kgs

ZEPU-AI5

Lower limbs muscle strength training and evaluation system

FEATURES

- Data analysis of assessment and training.
- The human-computer interaction of the rehabilitation training mode.
- Squat training.
- Muscle strength training.

ZEPU-A15 TECHNICAL SPECIFICATIONS	
Size (mm):	2060x775x1443(LxWxH)
Weight:	180kgs

ZEPU-AI6 PLUS

Three-dimensional upper limb active and passive training and evaluation system

FEATURES

- Intelligent assessment, artificial intelligence improves quality and efficiency.
- The latest technology in rehabilitation, imitating true feelings.
- Both active and passive modes are available.
- Three-dimensional space to improve sports performance.
- One-click switching between left and right arms.

ZEPU-A16 PLUS TECHNICAL SPECIFICATIONS	
Size (mm):	1000x750x1270(LxWxH)
Weight:	50kgs

ZEPU-AI7A&B&D

Active and passive exercise system

ZEPU-AI7A/B

ZEPU-AIZD

FEATURES

- It has four training modes: upper limb training, lower limb training, upper and lower limb freedom, and upper and lower limb coordination.
- A variety of prescriptions are preset, and users can also customize prescriptions
- and import and export through USB flash drives.
- With muscle strength assessment function.
- A variety of 2D and 3D therapy games built into the training mode.
- With real-time feedback function.
- 10.1-inch color LCD touch display control.
- Body height adopts electric adjustment.
- Upper limb and lower limb accessories are available for bedside type.

ZEPU-AI7A/B	ZEPU-AIZD
Size (mm): 1000x750x1270(LxWxH)	Size (mm): 1170x580x1050(LxWxH)
Weight: 50kgs	Weight: 70kgs

ZEPU-AI8

Electric rehabilitation training bed

FEATURES

- The electric rehabilitation training bed is an electric push rod driven device under software control. By adjusting the tilt angle, the patient fixed on it will produce its own gravity, allowing patients with hemiplegia, paraplegia, brain injury, etc. To com- plete the transition from supine to standing and the center of gravity from low to high, allowing the patient to fully adapt to the standing position.

ZEPU-A18 TECHNICAL SPECIFICATIONS	
Size (mm):	2150x1040x(450-800) (LxWxH)
Weight:	280kgs

ZEPU-AI9

Electric rehabilitation training bed

FEATURES

- The hip and knee joints are used to drive patients to take normal walking movements, providing a new way of upright walking rehabilitation training.
- Track and evaluate, quantify the occurrence of spasms, and protect the safety of training.
- Gait analysis and visual training status improve the efficiency of rehabilitation training.
- Situational interaction mode to enhance training enthusiasm.

ZEPU-A19 TECHNICAL SPECIFICATIONS	
Size (mm):	900x1250x(1240-1690)(LxWxH)
Weight:	120kgs

ZEPU-AI10

Dynamic and static balance evaluation and training system

FEATURES

- It uses robotic technology to integrate dynamic and static balance training and assessment.
- Static balance assessment captures and analyzes the movement trajectory of the patient's center of gravity, that is the center of gravity trajectory map.
- Dynamic balance assessment assesses the patient's balance function by recording changes in the patient's inclination on a force plate.
- Equipped with intelligent software system.
- Combined with situational interaction.

ZEPU-AI10 SPECIFICATIONS	
Size (mm):	2743x1145x1464 (LxWxH)
Weight:	205kgs

06

Rehabilitation Assessment & Diagnostics

STORAGE CART FERROX

✪ FEATURES

(1) Art. 260610 – Storage CART **
- natural wood
- for clubs, hoops and balls (etc.)
- dimensions 150 x 60 x 104 h cm

Version shown with optional accessories Art. 260615
(2) Art. 260615 – CART EQUIPMENT KIT ** equipped with:
- clubs, 36 cm
- clubs, 45 cm
- sand bags, 38 x 20 cm
- solid wood "Vayer" bricks
- plastic blocks for creating hurdle courses
- coloured nylon ropes
- ropes with handles and thickening
- balls for rhythmic gymnastics 130 g, 16 cm
- balls for rhythmic gymnastics 280 g, 18 cm
- balls for rhythmic gymnastics 420 g, 19 cm
- PVC gymnastic ring, 60 cm
- PVC gymnastic ring, 70 cm
- PVC gymnastic ring, 80 cm
- Bobath ball, 55 cm
- Bobath ball, 75

PSYCHOMOTOR TRAINING FISIOTECH

HOOPS

Colourful nylon hoops, flat section. Used for psychomotor courses along with cones with holes (code 1416031) and sticks (code 1416061).

SPECIFICATIONS		
MODELS	COLOURS	CODE
∅ 60 cm	assorted colours	1416011
∅ 70 cm	assorted colours	1416012
∅ 80 cm	assorted colours	1416013

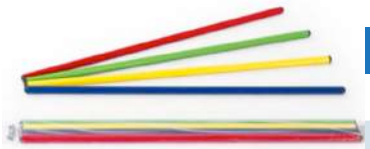

PVC STICKS SET – CODE 1416061

Set of four colourful gymnastics PVC sticks. Used for psychomotor courses along with cones with holes (code 1416031) and hoops (codes 1416011-12-13).

SPECIFICATIONS		
MODELS	COLOURS	CODE
∅ 3 cm	assorted colours	1416061

CONE WITH HOLES – CODE 1416031

Cone with holes available in four random colours (red, yellow, green, blue). Split vertex to insert PVC sticks (code 1416061) and hoops (codes 1416011-12-13) and three symmetrical lateral holes to insert PVC sticks in order to create courses.

SPECIFICATIONS		
MODELS	COLOURS	CODE
30 cm H	assorted colours	1416011

BALANCE ASSESSMENT AND REHABILITATION-NEUROSOFT

ASSESSMENT

- ONE SENSOR FOR COMPREHENSIVE BALANCE ANALYSIS
- COM ANALYSIS BASED ON TIME AND FREQUENCY
- SCREENING AND ADVANCED EXAMINATIONS
- ALL STANDARD CLINICAL PROTOCOLS (LOS TEST, ROMBERG'S TEST, ETC.)

GAIT ANALYSIS AND TRAINING WITH BIOFEEDBACK -NEUROSOFT

ASSESSMENT

- GAIT ANALYSIS FROM SIMPLE SCREENING TO A COMPREHENSIVE EXAM
- UP TO 25 GAIT PARAMETERS (TEMPORAL, SPATIAL, 3D KINEMATIC) AND DYNAMIC SURFACE EMG FROM UP TO 24 MUSCLES
- INTERFACE OPTIMIZED FOR CLINICAL USE

10 min turnaround between a patient to come and report generation

Signal acquisition is not affected by the surrounding metal constructions

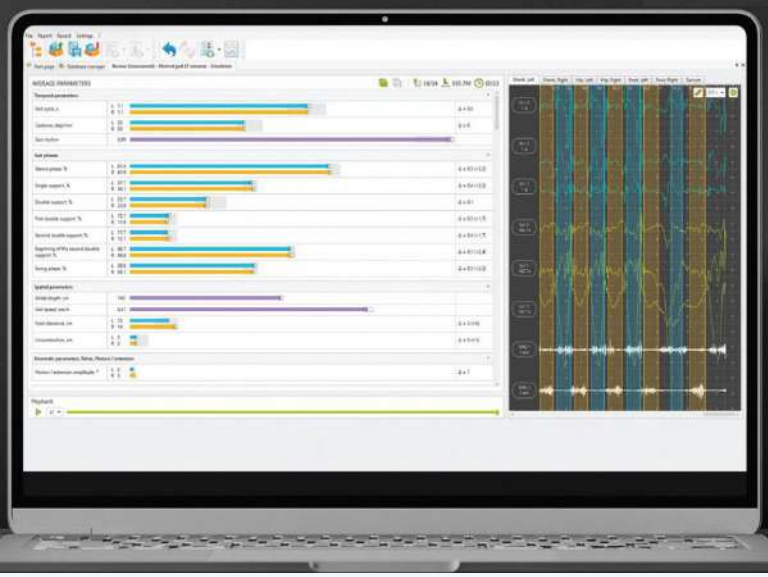

JOINT MOVEMENT ANALYSIS-NEUROSOFT

ASSESSMENT

- ANALYSIS USING IMU SENSORS
- SYNCHRONIZED EMG AND JOINT MOVEMENT ANALYSIS
- DATA EXCHANGE VIA WI-FI

NEUROSENS - NEUROSOF

REHABILITATION

- TRAINING OF COORDINATION AND MOVEMENTS IN JOINT AND SPINE
- EARLY REHABILITATION POSSIBILITIES
- MANUAL OR AUTOMATIC TRAINING MODES

ZEPU-SG2-3

Digital OT assessment and training system

ZEPU-SG2

ZEPU-SG3

ZEPU-SG2/3

Digital OT assessment and training system

FEATURES

SG2:Provide more than 50 interactive training modes
Able to perform finger fine motor control training, upper limb motor function training and evaluation recording.
SG3:A variety of accessories are available to evaluate and train fine movements of upper limbs and hands.

ZEPU-RX1

Multi-joint flexible comprehensive rehabilitation trainer

FEATURES

Multiple movements of the wrist joint can be trained, palmar flexion, dorsiflexion, radial deviation, ulnar deviation, pronation, and supination.

ZEPU-SG2/3 SPECIFICATIONS	
Size (mm):	1070x800x(1050-1350) (LxWxH)
Weight:	61kgs/75kgs

07

Therapy Equipment & Furniture

BED FERROX

SERIES CEZANNE PRO

Electric motor assisted kyphosis function

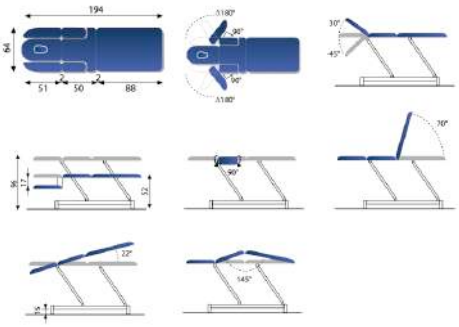

FEATURES

- Three sections, seven elements
- Central section with folding armrest
- Headrest with two armrest pivoting 180º
- Electric Kyphosis and Trendelenburg positions (visceral)
- Electric motors with a thrust force of 8000 N for elevation
- Electric motors with a thrust force of 4000 N for kyphosis position
- Comando a pulsantiera
- Safety control key
- Fire-retardant padding and covering class 1IM
- Electric height adjustment range 52 Δ 96 cm
- Safe working load 150 kg
- Dimensions: 194 x 64 x 52 Δ 96 cm
- Medical device

BED FERROX

SERIES CEZANNE PRO

Electric motor assisted kyphosis function

CEZANNE PRO 5

Art. 240015 Armrests pivoting by 100 degrees High-speed motor

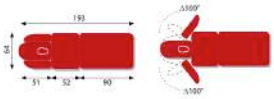

CEZANNE PRO 3

Art. 241015 High-speed motor

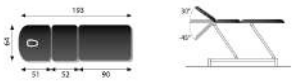

BED FERROX

SERIES CEZANNE JR

FEATURES

- Three sections, seven elements
- Central section with folding armrest
- Headrest with two armrest pivoting 180°
- Electric motor with a thrust force of 8000 N
- Manual control switch
- Safety control key
- Fire-retardant padding and covering class 1IM, washable
- Electric height adjustment range 50 Δ 92 cm
- Safe working load 160 kg
- Dimensions: 197 x 64 x 50 Δ 92 cm
- Medical device

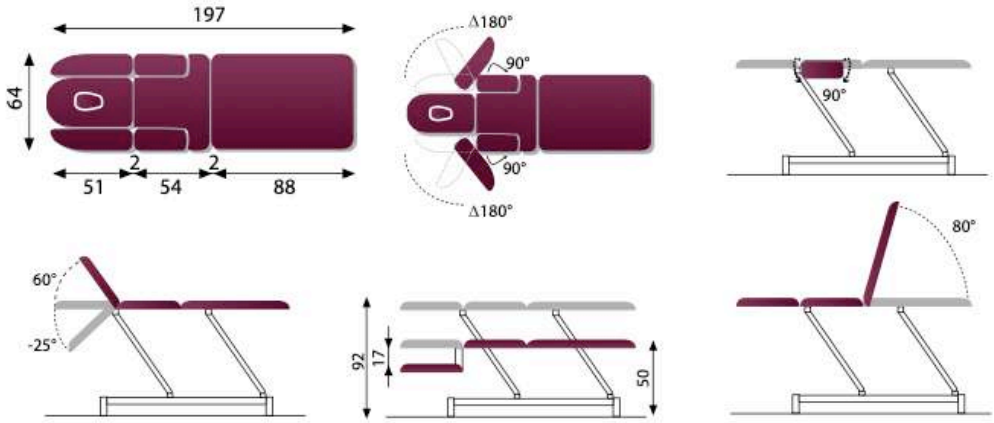

BED FERROX

SERIES CEZANNE JR

CEZANNE JR 5 Art. 240016

Armrests pivoting by 100 degrees
Version shown with optional footbar switch for peripheral control and castors

- Medical device

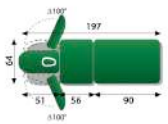

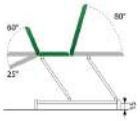

CEZANNE JR 3 Art. 241016

Version shown with optional footbar switch for peripheral control and castors

- Medical device

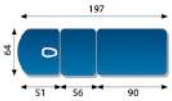

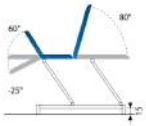

BED FERROX

SERIES MATISSE

The “REVERSO” head support

Expand your treatment table with new features, so that the patient can SIT or LIE during treatment.

« REVERSO » :

- Tilts up on two sides
- Length is adjustable depending on the size of the patient
- Tilts down for a more comfortable sitting position

The pivoting supports are height adjustable or can be tilted.
The lift system regulates table height and is adjustable.
In standard use, the head support can be tilted up and down.
The mobility of the segments and the uncomplicated arrangement make the work more pleasant and effective.

BED FERROX

SERIES MATISSE Pro

MATISSE PRO 2+2

Art. 241011 – Five mobile sections.
Armrests pivoting by 180 degrees, folding armrest on main sectionMedical device

✪ FEATURES

- Six sector table
- Central section with colapsible armrest
- Headrest with two armrest pivoting 180˚
- Electric motor with a thrust force of 8000 N
- Manual control switch
- Safety control key
- Fire-retardant padding and covering class 1IM
- Electric height adjustment range 50 ▲ 92 cm
- Safe working load 160 kg
- Dimensions: 194 x 64 x 50 ▲ 92cm
- Medical device

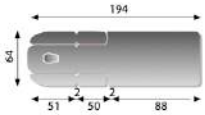

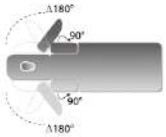

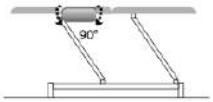

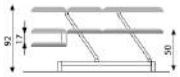

BED FERROX

SERIES MATISSE Pro

MATISSE PRO II

Art. 240011 - Armrests pivoting by 100 ˚degrees
High-speed motor
Treatment table with electrically adjustable height control. For therapy, massages and medical care

✪ FEATURES

- Two section table with gas spring assisted head section
- Electric motor with a thrust force of 8000 N
- Manual control switch
- Safety control key
- Fire-retardant padding and covering class 1IM Electric height adjustment range 50 ▲ 92 cm
- Safe working load 160 kg
- Dimensions: 194 x 64 x 50 A 92 cm
- Medical device

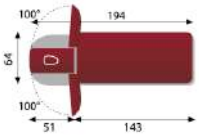

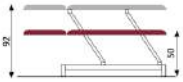

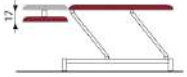

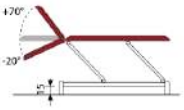

BED FERROX

DEGAS RPG

ART. 240025 RPG

Treatment table with electrically adjustable height control.

✪ FEATURES

- Two section table with 180° pivoting arm supports, height adjustable +17 cm
- Electric motor with a thrust force of 8000 N
- Manual control switch
- Safety control key
- Fire-retardant padding and covering class 1IM
- Electric height adjustment range 50 ▲ 92 cm
- Safe working load 160 kg
- Dimensions: 200 x 65 x 50 ▲ 92 cm
- Medical device

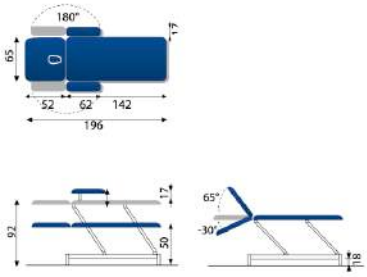

BED FERROX

DEGAS Pro

ART. 240020

Treatment table with electrically adjustable height control. For therapy, massages and medical care.

✪ FEATURES

- Two section table with gas spring assisted head section
- Electric motor with a thrust force of 8000 N
- Manual control switch
- Safety control key
- Fire-retardant padding and covering class 1IM
- Electric height adjustment range 50 ▲ 92 cm
- Safe working load 160 kg
- Dimensions: 194 x 64 x 50 ▲ 92 cm
- Medical device

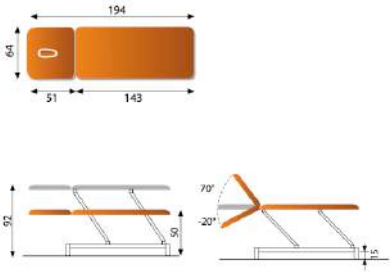

BED FERROX

OS 206

ART. 239000 – POSITIVE and negative-tilt head rest, fixed armrests

FEATURES

- Two section table with gas spring assisted backrest (positive/negative tilt)
- Upholstery clamped or sawn (optional)
- High density HR 75 padding
- Fire-retardant padding and covering
- Electric motor with a thrust force of 8000 N
- Manual control switch
- Safety control key
- Electric height adjustment range 50 ▲ 92 cm
- Safe working load 160 kg
- Dimensions: 190 x 54 x 50 ▲ 92 cm
- Medical device

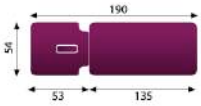

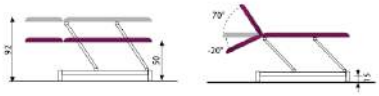

BED FERROX

UNIVERSAL UROLOGY

ART. 239100 – UNIVERSAL

Professional treatment table for kinesitherapy, with integrated option for fitting a stirrup system for uro-gynaecological examination

FEATURES

- Electric motor with a thrust force of 8000 N
- Gas spring assisted regulation of the two backrests
- Pair of safety clip belts
- Manual control switch
- Safety control key
- Fire-retardant padding and covering, class 1IM, washable, density 40
- Electric height adjustment range 50 Δ 92 cm
- Safe working load 150 kgs
- Dimensions: 188 x 64 x 50 Δ 92 cm
- Medical device

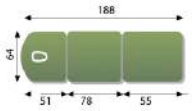

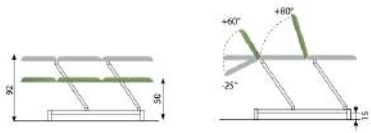

STOOL FERROX

STOOLS

Treatment table accessories,
footboards, stools and chairs

FIXED HEIGHT CHAIRS AND STOOLS

(1) Art. 111810 - ADJUSTABLE-HEIGHT BENCH STOOL WITH STEEL FRAME**

- adjustable height 35 A 65 h cm
- with padded top covered in washable imitation leather
- seat dimensions 60 x 30 cm

(2) Art. 111780-STOOL WITH EPOXY STEEL FRAME**

- with padded top covered in washable imitation leather
- dimensions 60 x 30 x 35 h cm

ADJUSTABLE HEIGHT, GAS SPRING OPERATED SWIVELLING STOOLS

(3) Art. 220190-SWIVELLING STOOL** overstitched padding

- fire-retardant padding and covering
- rubber covered swivelling castors
- adjustable height 45 A 55 h cm

(4) Art. 220194 - "TABOURET" SWIVELLING STOOL**

- fire-retardant padding and covering
- rubber covered swivelling castors
- adjustable height 62 A 85 h cm

FOOTBOARDS

(5) Art. 220181-ONE STEP

- dimensions 40 x 20 x 18 h cm
- chromed steel frame
- Medical device

(6) Art.220180-TWO STEPS

- dimensions 50 x 40 x 36 h cm
- chromed steel frame
- Medical device

BED FERROX

BOTTICELLI

Art. 238000 – Positive and negative tilt
Treatment table with electrically adjustable height control.
For therapy, massages and medical care

FEATURES

- 2 section table with gas spring assisted backrest with positive/negative tilt facility
- Electric motor with a thrust force of 6000 N
- Manual control switch
- Fire-retardant padding and covering class 1IM
- Electric height adjustment range 50 ▲ 92 cm
- Safe working load 140 kg
- Dimensions: 204 x 64 x 50 ▲ 92 cm
- Medical device

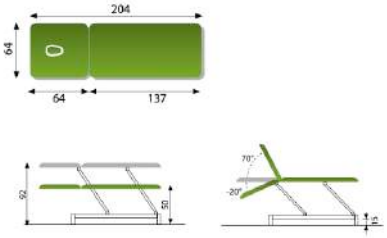

BED FERROX

BOTTICELLI PRO
WITH ARMRESTS

Art. 238001 – Positive/Negative Head Section Tilt with Armrests pivoting 100°
Treatment table with electrically adjustable height control and pivoting armrests. For therapy, massages and medical care

FEATURES

- 4 section table with gas spring assisted backrest with positive/negative tilt facility
- Electric motor with a thrust force of 6000 N
- Fire-retardant padding and covering
- Electric height adjustment range50 ▲ 92 cm
- Safe working load 140 kg
- Dimensions: 194 x 64 x 50 ▲ 92 cm
- Medical device

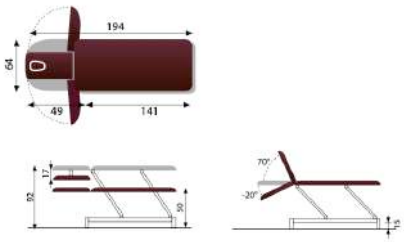

WEDG CUSHION FERROX

PILLOWS AND CUSHIONS

Treatment table accessories. Padded in and covered with imitation leather fire-retardant material.

✪ VARIOUS SIZES AVAILABLE:

(1) WEDGE-SHAPE WITH BREATHING HOLE **
Art. 240067 40 x 18 x 9 cm

(2)-(3) SEMI-CYLINDRICAL **
Art. 240280 30 x 15 x 8 cm
Art. 240286 50 x 25 x 18 cm

(4) TRAPEZOIDAL **
Art. 240290 40 x 50 x 30 cm

(5) ANATOMICAL **
Art. 240065 50 x 27 x 6 A9 h cm for neck
Art. 240066 75 x 50 x 6 A 19 h cm for legs

(6)-(7)-(8)-(9) CYLINDRICAL **
Art. 240080 Ø 8 x 20 cm
Art. 240090 Ø 15 x 35 cm
Art. 240100 Ø 15 x 50 cm
Art. 240110 Ø 20 x 100 cm
Art. 240120 Ø 25 x 50 cm
Art. 240130 Ø 25 x 100 cm

(10)-(11) WEDGE-SHAPE **
Art. 240180 30 x 30 x 10 cm
Art. 240190 40 x 30 x 10 cm
Art. 240195 40 x 50 x 15 cm
Art. 240200 60 x 40 x 15 cm
Art. 240210 60 x 60 x 15 cm
Art. 240220 60 x 60 x 20 cm
Art. 240230 60 x 40 x 30 cm

(12) RECTANGULAR **
Art. 240240 40 x 20 x 10 cm
Art. 240250 40 x 20 x 15 cm
Art. 240260 40 x 30 x 10 cm
Art. 240270 60 x 25 x 10 cm

(13) CUBIC **
Art. 240140 30 x 30 x 30 cm
Art. 240150 40 x 40 x 40 cm
Art. 240160 50 x 50 x 50 cm
(14) Art. 240296 for breast support**
(15) Art. 240295 sculptured leg suppor cushion **
(16) Art. 00151 THE ORIGINAL
** special upholstery cleaning set.

BED FERROX

SERIES PICASSO

PICASSO XLTREND – Art.240018
Long Backrest XL 84 cm – positive tilt only.
Treatment table with electrically adjustable height control and pivoting armrests. For therapy, massages and medical care

FEATURES

- 2 section table with gas spring operated backrest
- Electric motor with a thrust force of 8000 N
- Manual control switch
- Safety control key
- Fire-retardant padding and covering class 1IM
- Electric height adjustment range 50 ▲ 92 cm
- Safe working load 160 kg
- Dimensions: 198 x 64 x 50 ▲ 92 cm
- Medical device

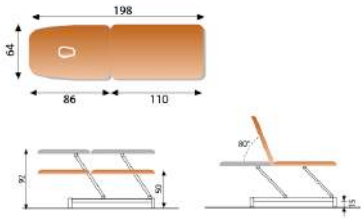

BED FERROX

SERIES PICASSO

PICASSO XLL TREND – Art. 240018 L
Width 80 cm – positive tilt only.
Treatment table with electrically adjustable height control. For therapy, massages and medical care

FEATURES

- 2 section table with gas spring operated backrest
- Electric motor with a thrust force of 8000 N
- Manual control switch
- Safety control key
- Fire-retardant padding and covering class 1IM
- Electric height adjustment range 50 ▲ 92 cm
- Safe working load 160 kg
- Dimensions: 198 x 80 x 50 ▲ 92 cm
- Medical device

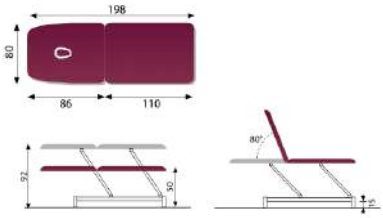

BED FERROX

SERIES PICASSO

PICASSO COMFORT
ART. 238500 – POSITIVE AND NEGATIVE TILT

Treatment table with electrically adjustable height control. For therapy, massages and medical care

✪ FEATURES

- 2 section table with gas spring assisted large backrest with positive/negative tilt facility
- Electric motor with a thrust force of 8000 N
- Manual control switch
- Towel hanger
- Fire-retardant padding and covering class 1IM
- Electric height adjustment range 50 Δ 92 cm
- Safe working load 160 kg
- Dimensions: 209 x 64 x 50 ▲ 92 cm
- Medical device

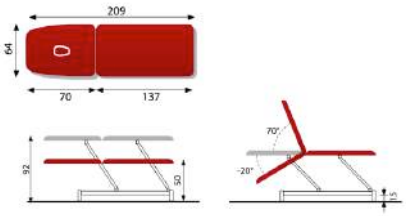

BED FERROX

SERIES PICASSO

PICASSO CLUB
Art. 240009 – Positive and negative tilt

Treatment table with electrically adjustable height control. For therapy, massages and medical care

✪ FEATURES

- 2 section table with gas spring assisted backrest with positive/negative tilt facility
- Electric motor with a thrust force of 8000 N
- Manual control switch
- Fire-retardant padding and covering class 1IM
- Electric height adjustment range50 ▲ 92 cm
- Safe working load 160 kg
- Dimensions: 209 x 64 x 50 ▲ 92 cm
- Medical device

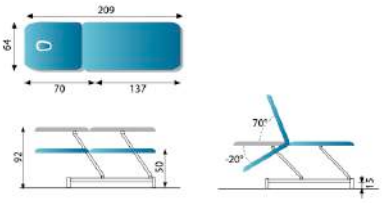

BED FERROX

SERIES PICASSO

PICASSO QUATTRO
ART. 240022 – 4 SECTIONS

Treatment table with electrically adjustable height control.
For therapy, massages and medical care

FEATURES

- 4 section table
- Gas spring assisted backrest and split leg sections
- Electric motor with a thrust force of 8000 N
- Manual control switch
- Safety control key
- Fire-retardant padding and covering class 1IM
- Electric height adjustment range 50 ▲ 92 cm
- Safe working load 140 kg
- Dimensions: 198 x 64 x 50 ▲ 92 cm
- Medical device

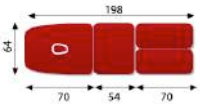

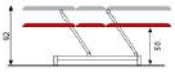

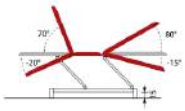

BED FERROX

SERIES PICASSO

PICASSO SUITE – POSITIVE TILT ONLY ART. 240018S

Treatment table with electrically adjustable height control.
For therapy, massages and medical care

FEATURES

- 3 section table
- Gas spring assisted backrest
- Electric motor with a thrust force of 8000 N
- Manual control switch
- Safety control key
- Fire-retardant padding and covering class 1IM
- Electric height adjustment range 50 ▲ 92 cm
- Safe working load 160 kg
- Dimensions: 205 x 62 x 50 ▲ 92 cm
- Medical device

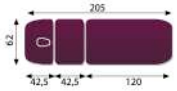

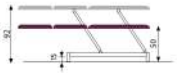

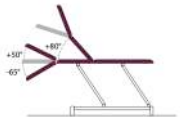

BED FERROX

SERIES CHAGALL

CHAGALL 6 NEO – Art. 240002 – 6 Sections

Quick height adjustment within 34 seconds. electrically adjustable backrest function

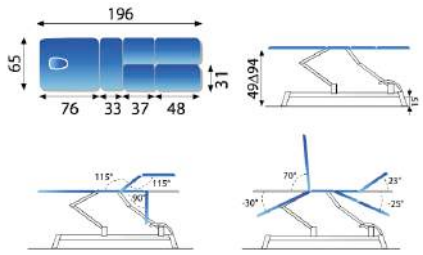

✪ FEATURES

- 5 joint, 6 section table
- 2 electric motors with a thrust force of 10000 N and 6000 N (backrest)
- Manual control switch
- Safety control key
- Gas spring assisted regulation of split leg sections
- Trendelenburg and kyphosis positions
- Fire-retardant padding and covering class 1IM
- Electric height adjustment range 49 ▲ 94 cm
- Safe working load 250 kg
- Dimensions: 196 x 65 x 49 ▲ 94 cm
- Medical device

BED FERROX

SERIES CHAGALL

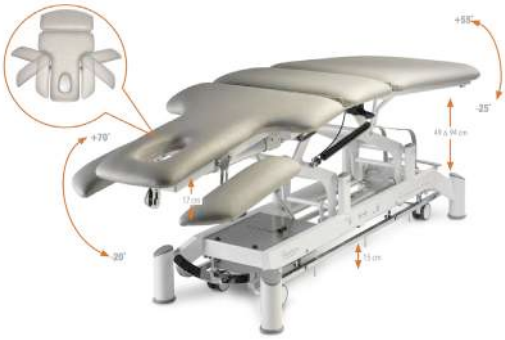

CHAGALL 5 NEO

Art. 240001 – 5 sections Quick height adjustment within 34 seconds. Electrically adjustable backrest function Armrests pivoting by 100 degrees

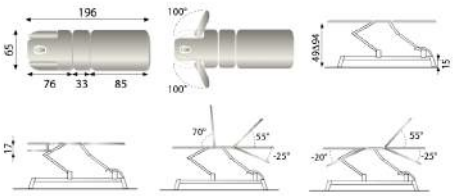

✪ FEATURES

- 4 joint, 5 section table
- 2 electric motors with a thrust force of 10000 N and 6000 N (backrest)
- Manual control switch
- Safety control key
- Gas spring assisted regulation of leg section
- Trendelenburg and kyphosis positions
- Electric height adjustment range 49 ▲ 94 cm
- Fire-retardant padding and covering class 1IM, washable Safe working load 250 kg
- ·Dimensions: 196 x 65 x 49 ▲ 94 cm
- Medical device

BED FERROX

SERIES CHAGALL

CHAGALL 3 NEO – Art. 240000 – 3 Sections Quick Height Adjustment Within 34 Seconds. Electrically Adjustable Backrest

FEATURES

- 2 joint, 3 section table
- 2 electric motors with a thrust force of 10000 N and 6000 N (backrest)
- Manual control switch
- Safety control key
- Gas spring assisted leg section
- Trendelenburg and kyphosis position
- ·Electric height adjustment range 49 ▲ 94 cm
- Fire-retardant padding and covering class 1IM, washable
- Safe working load 250 kg
- Dimensions: 196 x 65 x 49 ▲ 94 cm
- Medical device

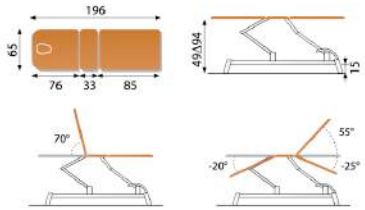

BED FERROX

SERIES CHAGALL

CHAGALL 2 NEO – Art. 243001 – 2sections Quick height adjustment within 34 seconds. Electrically adjustable backrest. Bariatric use.

FEATURES

- Two sections table
- 2 electric motors with a thrust force of 10000 N and 6000 N (backrest)
- Manual control switch
- Safety control key
- Electric height adjustment range 49 ▲ 94 cm
- Fire-retardant padding and covering class 1IM, washable
- Safe working load 250 kg
- Dimensions: 200 x 70 x 49 ▲ 94 cm
- Medical device

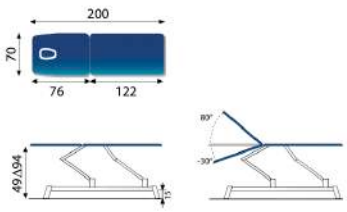

BED FERROX

BOBATH PRO POWER 200X120

(1) BOBATH "PRO POWER" – Art. 240041/TE electrically assisted backrest

- Electric motor with a thrust force of 10000 N
- Tubular protection for upholstery
- Hand switch control
- Class IM1 fire retardant padding and covering
- Electric height adjustment range 46 ▲ 94 cm
- Gas spring assisted tilting of backrest up to + 85°
- Safe working load: 300 kg
- Dimensions: 200 x 120 x 46 ▲ 94 cm
- Medical device

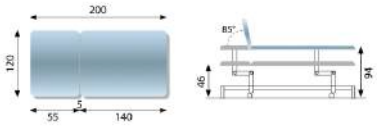

(2) BOBATH "PRO POWER" – art.240041 D

- Electric motor with a thrust force of 10000 N
- Tubular protection for upholstery
- Foot pedal control
- Safety control key
- Class IM1 fire retardant padding and covering
- Electric height adjustment range 46 ▲ 94 cm
- Safe working load: 300 kg
- Dimensions: 200 x 120 x 46 ▲ 94 cm
- Medical device

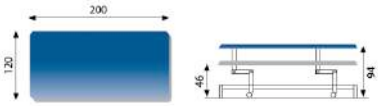

BED FERROX

BOBATH 200X200

(1) BOBATH "GRAN COMFORT"

- Electric motor with a thrust force of 10000 N
- Tubular protection for upholstery
- Two sets foot pedal control
- Safety control key
- Class IM1 fire retardant padding and covering
- Transport wheels
- Electric height adjustment range 46 ▲ 94 cm
- Safe working load: 300 kg
- Dimensions: 200 x 200 x 46 ▲ 94 cm
- Medical device

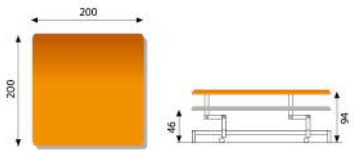

BED FERROX

BOBATH JR 200X120

(1) BOBATH JR – ART. 240006 As described for Art. 240006 but with electrically assisted backrest

- Hand switch control
- Medical device

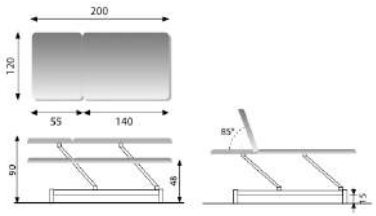

(2) BOBATH Jr – Art. 240006

- Electric motor with a thrust force of 8000 N
- Foot pedal control
- Safety control key
- Fire-retardant padding and covering class 1IM
- Electric height adjustment range 48 ▲ 90 cm
- Safe working load 160 kg
- Dimensions: 200 x 120 x 48 ▲ 90 cm
- Medical device

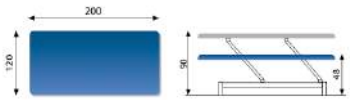

BED FERROX

BOBATH JR 200X100

(1) BOBATH JR – ART. 240007

- Electric motor with a thrust force of 8000 N
- Manual control switch
- Safety control key
- Fire-retardant padding and covering class 1IM
- Electric height adjustment range 48 ▲ 90 cm
- Safe working load 160 kg
- Dimensions: 200 x 100 x 48 ▲ 90 cm
- Medical device

(2) BOBATH JR – ART. 240007 TE –

As described for Art. 240007 but with electrically assisted backrest

- Hand switch control
- Medical device

BED FERROX

TIEPOLO 100X200

TIEPOLO 100X200 – ART. 240033

Fixed height Bobath table with steel frame for medical examination, therapy and massages

- Bobath therapy treatment table
- Fire-retardant padding and covering class 1IM, washable
- Safe working load 200 kg
- dimensions 200 x 100 x 50 h cm
- Medical device

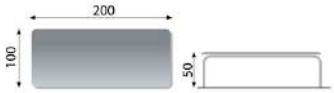

TILTING BED FERROX

MICHELANGELO

ART. 250177 – VARIABLE HEIGHT, 5 FLOOR CONTACT POINTS FOR EXTRA STABILITY.

Very comfortable double density 72cm upholstery.
Tilt Table with two electric motors for height and tilt adjustment

- Height adjustment range 50 ▵ 95 cm for easy transfer of wheelchair patients
- Gas spring assisted backrest.
- Easy patient hoist transfer.
- 2 electric motors with a thrust force 10000 N for height and 10000 N for tilt adjustment
- +80 degree gas strut adjustable backrest.
- Manual hand switch with safety lock function
- Electric height adjustment range 50 ▵ 95 cm
- Fitted with 5 fixation belts made by Socopedic™ in Cordura™
- Equin/Talus footrests -+15 degrees adjustable incline
- Tilt adjustment up to + 88°
- 40 density filler foam
- Class IM1 fire resistant foam and upholstery
- Inclinometer
- Two fixed and two swivelling castors with brake
- Vertical and horizontal safety work load 160 kg
- Dimensions: 200 x 74 x 50 ▵ 95 h cm
- Medical device

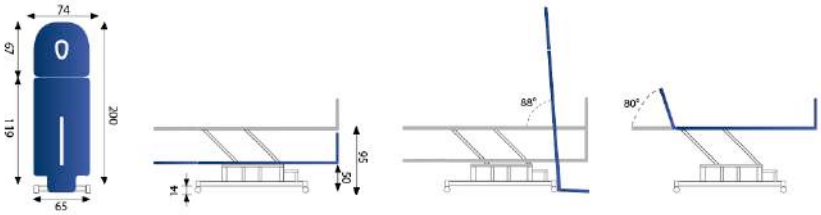

BED FERROX

DALÌ – GOYA WITH BACKREST

(1) DALÍ – Art. 220151 P

Fixed height treatment table with steel frame. For medical examination, therapy and massages.

- 2 section table with gas spring assisted regulation of backrest. Positive tilt only.
- Fire-retardant padding and covering class 1IM
- Dimensions: 195 x 65 x 80 cm
- Medical device

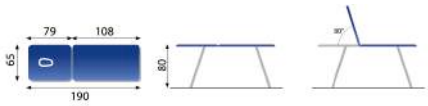

(2) GOYA – ART. 220155

Fixed height treatment table with steel frame. For medical examination, therapy and massages

- 1 joint, 2 section table with gas spring assisted backrest
- Fire-retardant padding and covering class 1IM
- Gas spring assisted regulation of backrest section
- positive / negative tilt facility
- Dimensions: 203 x 65 x 80 cm
- Medical device

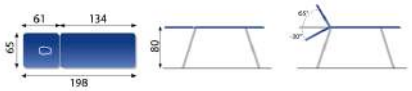

BED FERROX

TIEPOLO 200X200

TIEPOLO 200X200 – ART. 240032

Fixed height Bobath table with steel frame for medical examination, therapy and massages

- Bobath therapy treatment table
- Fire-retardant padding and covering class 1IM, washable
- Safe working load 200 kg
- dimensions 200 x 200 x 50 h cm
- Medical device

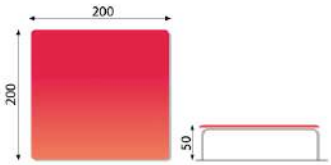

TILTING BED FERROX

RAFFAELLO

ART. 250174 D – VARIABLE HEIGHT ADJUSTMENT

Tilt Table with two electric motors for height and tilt adjustment

- Height adjustment range 49 ∆ 94 cm for easy transfer of wheelchair patients
- Gas spring assisted regulation of backrest
- The design of the support frame allows smooth lifting and transfer of the patient
- 2 electric motors with a thrust force 10000 N for height and 10000 N for tilt adjustment
- Manual hand switch with safety lock function
- Electric height adjustment range 49 ▲ 94 cm
- Independently adjustable and folding twin footboard. Positive/ negative tilt + - 15˚
- Tilt adjustment up to + 88˚
- Fire-retardant padding and covering class 1IM
- Gas spring assisted backrest tilt adjustment + 80˚
- Equipped with set of 5 fixation belts
- Two fixed and two swivelling castors with brake
- Goniometer
- Vertical and horizontal safety work load 160 kg
- Dimensions: 200 x 70 x 49 ▲ 94 h cm
- Medical device

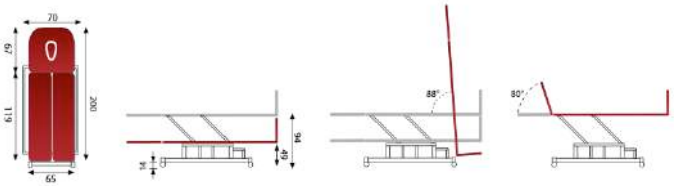

TILTING BED FERROX

CANOVA

Art. 250171 D – Single leg section Tilt table with electric tilt adjustment

- Electric motor with a thrust force of 6000 N for positive tilt option
- Positive tilt up to + 88˚
- Manual hand switch with safety lock function
- Equipped with set of 3 fixation belts
- Manual control switch
- Fire-retardant padding and covering class 1IM
- Folding and adjustable footboard + - 15˚
- Two fixed and two swivelling castors all with blocking mechanism
- Patient transfer access 14 cm
- Safety work load 120 kg
- Dimensions: 200 x 65 x 49h cm
- Medical device

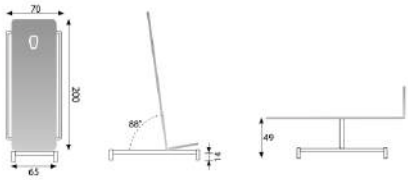

TILTING BED FERROX

CANALETTO

Art. 250172 Independently adjustable twin footboard

- Electric motor with a thrust force of 8000 N
- Positive tilt up to + 88°
- Manual hand switch with safety lock function
- Independently adjustable and folding twin footboard. Positive/negative tilt + - 15°
- Equipped with set of 5 fixation belts
- Fire-retardant padding and covering class 1IM
- Two fixed and two swivelling castors with brakes
- Safety work load 140 kg
- Dimensions: 200 x 74 x 49h cm
- Medical device

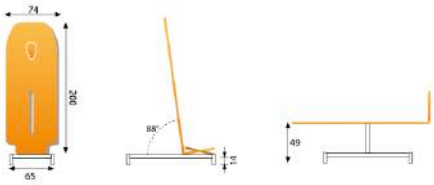

BED FERROX

MODÍ – WITH HEADREST

MODÍ – Art. 220151

Fixed height treatment table with steel frame. For medical examination, therapy and massages

- 1 joint, 2 section table with gas spring assisted headrest
- Fire-retardant padding and covering class 1IM
- Gas spring assisted regulation of head section positive / negative tilt facility
- Dimensions: 195 x 65 x 80 cm
- Medical device

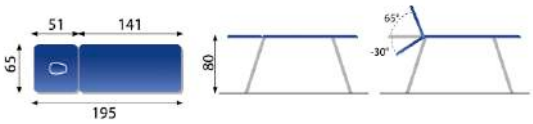

BED FERROX

MARTINI- MARTINI plus

MARTINI – Art. 220156

Fixed height treatment table with steel frame. For medical examination, therapy and massages.

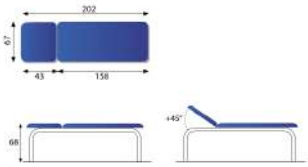

(1) MARTINI – Art.220156

- 1-joint, 2-section table
- Manual rack-and-pinion adjustment of head section
- Foam in bidensity: T35/PK40
- Safe working load: 140 kg
- Dimensions: 202 x 67 x 68 h cm
- Medical device

MARTINI PLUS – ART. 220158

Fixed height treatment table with steel frame. For medical examination, therapy and massages

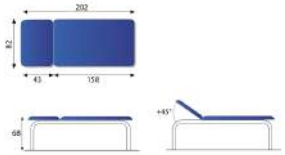

MARTINI Plus – Art.220158

- 1-joint, 2-section table
- Manual rack-and-pinion adjustment of head section
- Foam in bidensity: T35/PK40
- Safe working load :140 kg
- Dimensions 202 x 82 x 68 h cm
- Medical device

BED FERROX

SERIES MATISSE

MATISSE "REVERSO"

Art. 242011 – 100°pivoting arm supports
Quick height adjustment within 43 seconds

Table with electric height adjustment for therapy, massage, and medical treatment

- 2-section treatment table with four segments
- Headrest adjustment assisted by gas springs
- Electric lift system with a force of 8000N
- Manual control
- Safety key
- Flame retardant coating and foam M1
- Height adjustable from 50 ▲ 92 cm
- Safe working load: 160 kg
- Dimensions: 204 x 64 x 50 ▲ 92 cm
- Medical device

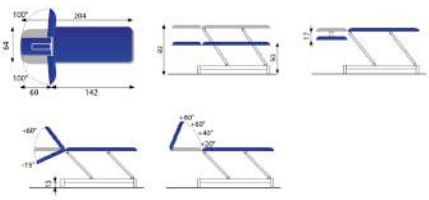

BED FERROX

BERNINI – TIZIANO

BERNINI – Art. 220300
Fixed height treatment table with natural beech frame for medical
examination, therapy and massages.

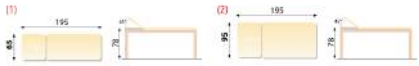

(1) BERNINI – Art. 220300 cm 195 x 65 x 78 h
- 1 joint, 2 section
- Manual rack-and-pinion adjustment of head section

OPTIONS:
- Art. 220168 F - breathing hole and plug
- Art. 220170 A - paper roll holder
- Art. 220340 - wooden shelf **

- Medical device

(2) BERNINI – Art. 220305 A cm 195 x 95 x 78 h
OPTIONS:
- Art. 220168 F - breathing hole and plug
- Art. 220171 A - paper roll holder
- Art. 220341 - wooden shelf **

- Medical device

TIZIANO – Art. 220301F
Fixed height treatment table with natural beech frame for medical
examination, therapy and massages.

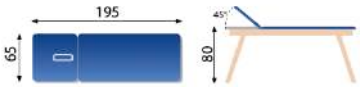

(3) TIZIANO – Art. 220301F cm 195 x 65 x 80 h
- 1 joint, 2 section
- Manual rack-and-pinion adjustment of head section
- Medical device

OPTIONS:
- Art. 220168 F - breathing hole and plug
- Art. 220170 A - paper roll holder

FURNITURE FISIOTECH

GLASS DOOR CABINETS
Tempered glass door cabinets with four adjustable shelves and hinged doors, painted steel structure.

TECHNICAL SPECIFICATIONS	
Length	80 / 60 cm
Width	40 cm
Height	180 / 160 cm

MODELS	DIMENSIONS	CODE
Two hinged doors	80 x 40 x 180 cm	1611011
One hinged door	60 x 40 x 160 cm	1611012

DESK – Code 1611101
Desk with three drawers, painted steel structure and plywood board.

Code 1611101

TECHNICAL SPECIFICATIONS	
Length	130 cm
Width	80 cm
Height	73 cm

REVOLVING CHAIR – Code 1611201
Revolving chair with functional aesthetical features, with a high backrest in constant contact with your back.

Code 1611201

TECHNICAL SPECIFICATIONS	
Depth	63 cm
Width	54 cm
Height	109 cm
Seat depth	44 cm
Seat width	46 cm
Seat height	55 cm

UPHOLSTERED CHAIR – Code 1611202
Chair with non-deformable padding, painted steel structure.

Code 1611202

TECHNICAL SPECIFICATIONS	
Depth	66 cm
Width	71 cm
Height	75 cm
Seat depth	49 cm
Seat width	50 cm
Seat height	42 cm

NEW BED FISIOTECH

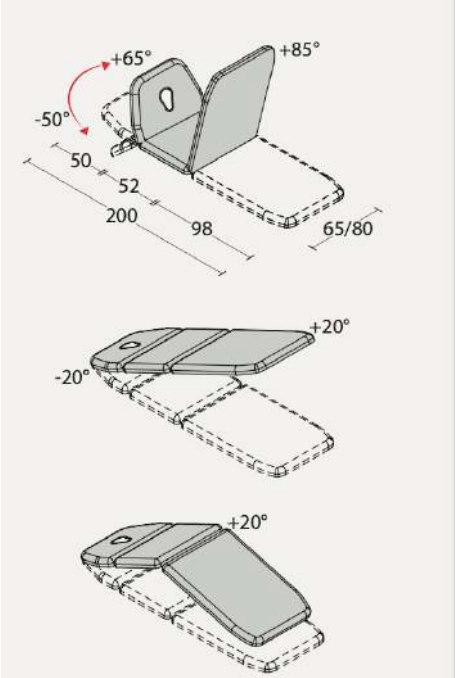

TECHNICAL SPECIFICATIONS	
Height adjustment	electrical or hydraulic 47-92 cm
Length	200 cm
Width	65 / 80 cm
Max. working load	200 kg
Headrest adjustment	with gas spring +65° -50°
Middle section adjustment	with gas spring or electrically +20°
Footrest adjustment	with gas spring +85°
Trendelenburg position	+20°
Breathing hole and bung	as standard
Padding and upholstery fire-resistance rating	1IM
Padding: density/thickness	30 (kg/m³) / 4 cm
Lateral offset	24 cm
Under bed clearance (model with all round bar excluded)	12 cm
Weight	80 kg

ACCESSORIES	CODE
Paper roll holder	1210010
Four castors	1218020
Safety magnet	1221030
Safety double click	1221040

ACCESSORIES	CODE
Swiss plug	1221050
UK 3-pin plug	1221060
Double-ply paper roll	1210060

FURNITURE FISIOTECH

REVOLVING COAT RACK – Code 1611301
Standing, revolving coat rack with umbrella stand and drip tray.

Code 1611301

SCREEN – Code 1611401
Screen made of anodized aluminium tube frame.
Washable, self-extinguishing plastic curtains.
Ø 5 cm castors (central ones with brake).

Code 1611401

TECHNICAL SPECIFICATIONS	
Total width	16
Height	17
Section width	55

TERAPEUTA SCM-7-MED INMED

FEATURES

- 7-section for massage table.
- Adjustable head section from -70° to +40° with a gas spring.
- Face hole in the head section with 2 removable face hole covers (round, crescent).
- Fold-down side sections in the middle section with a semi-automatic blocking/ release system.
- Innovative self-locking fold-down armrests in head section (one hand operated) -
- SmartS4Arms (Smart Slide For Arms).
- Adjustable leg section from -10° to 80° with 2 gas springs.
- Release handle of the gas spring system in the leg section accessible from both sides of the table.
- Two-layer padding with upholstery in many colours.
- Powder coated, very stable steel frame.
- Traction support sleeves.
- Personal Authorization Safety System with 2 magnetic safety keys.
- HalloTronic® System for electric high/low height adjustment from 47 to 95 cm with a lifting capacity up to 225 kg.
- Powder coated steel high/low height adjustment foot bar accessible from each side of the table.
- Rubber feet with 1 cm height adjustment allowing for the levelling of the table.
- Two ways of frame painting: „white" or „twintone".

2 ways of frame painting

Box dimensions: **220 x 85 x 75 cm** Weight: **+50 kg**

Length: **205 cm** | Height: **47-95 cm** | Width: **69 cm** | Weight: **95/110 kg** | Max load*: **225 kg**

BED FISIOTECH

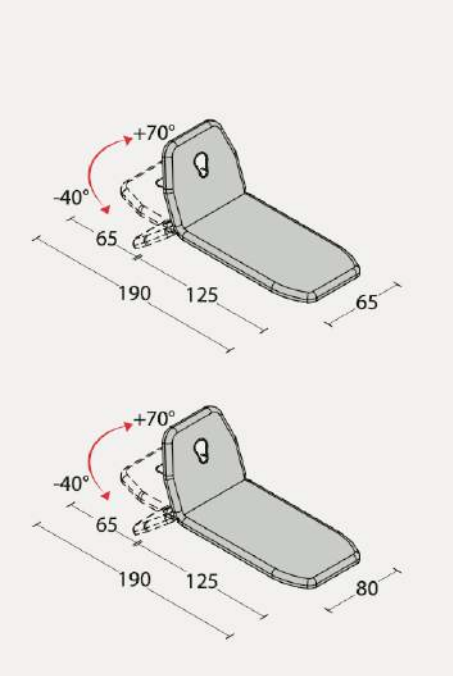

TECHNICAL SPECIFICATIONS	
Height adjustment	electrical or hydraulic 49-95 cm
Length	190 cm
Width	65 / 80 cm
Max. working load	200 kg
Headrest adjustment	with gas spring +70° -40°
Breathing hole and bung	as standard
Padding and upholstery fire-resistance rating	1IM
Padding: density/thickness	30 (kg/m³) / 4 cm
Lateral offset	none
Under bed clearance	12 cm
Weight	70 kg

ACCESSORIES	CODE
Paper roll holder	1218010
Four castors	1218020
Terry towel couch cover 65 cm	1210040
Terry towel couch cover 80 cm	1210050
Double-ply paper roll	1210060

ACCESSORIES	CODE
Safety magnet	1218030
Safety double click	1218040
Swiss plug	1218050
UK 3-pin plug	1218051

FURNITURE FISIOTECH

REVOLVING STOOL
Stool with five spokes. The height is adjustable with a gas spring. The seat is upholstered in a fire-resistant leatherette. See colours and materials in the chart on the back cover flap.

TECHNICAL SPECIFICATIONS	
Height adjustment	40-55 cm
Base diameter	60 cm
Seat diameter	35 cm
Max load	120 kg

MODELS	CODE
Black frame with castors	1612011
Black frame with feet	1612012
Chrome-plated frame with castors	1612013
Chrome-plated frame with feet	1612014

UPHOLSTERED BENCH
Powder-coated steel structure, padded seat upholstered in class 1IM fire-resistant, washable leatherette. Maximum load 150 Kg.

MODELS	DIMENSIONS	CODE
Small	60 x 30 x 45 cm	1613011
Big	120 x 30 x 45 cm	1613012

NEW BED FISIOTECH

Model shown Code 1121C30C1SB1 + Accessories Code 1218020

All around foot bar switch

Model shown Code 1121C30C1CB1
+ Accessories Code 1218020

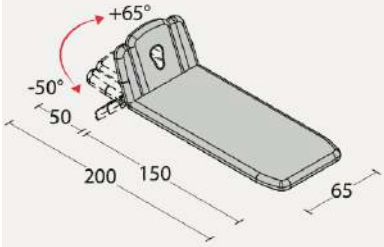

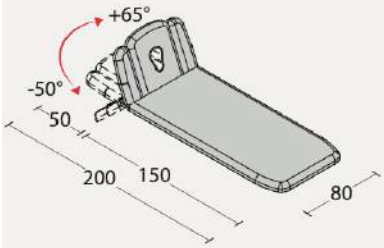

TECHNICAL SPECIFICATIONS	
Height adjustment	electrical or hydraulic 47-92 cm
Length	200 cm
Width	65 / 80 cm
Max. working load	200 kg
Headrest adjustment	with gas spring +65° -50°
Armrests on headrest adjustment	manual
Breathing hole and bung	as standard
Padding and upholstery fire-resistance rating	1IM
Padding: density/thickness	30 (kg/m³) / 4 cm
Lateral offset	24 cm
Under bed clearance (model with all round bar excluded)	12 cm
Weight	75 kg

ACCESSORIES	CODE
Paper roll holder	1210010
Four castors	1218020
Collapsible cotsides	1221070
Safety magnet	1221030

ACCESSORIES	CODE
Safety double click	1221040
Swiss plug	1221050
UK 3-pin plug	1221060
Double-ply paper roll	1210060

BED FISIOTECH

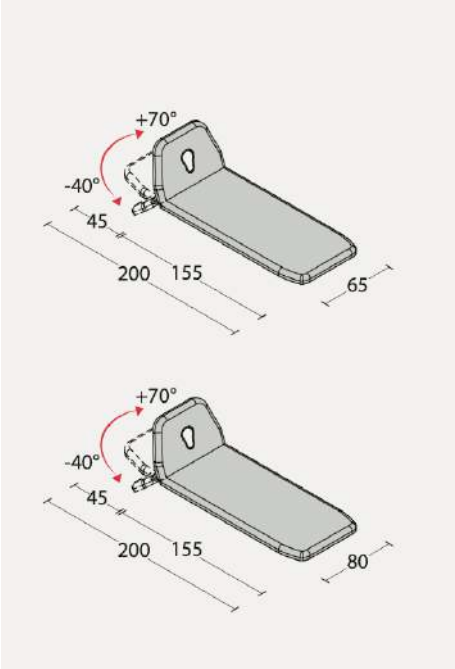

TECHNICAL SPECIFICATIONS	
Height adjustment	electrical or hydraulic 49-95 cm
Length	200 cm
Width	65 / 80 cm
Max. working load	200 kg
Headrest adjustment	with gas spring +70°- -40°
Breathing hole and bung	as standard
Padding and upholstery fire-resistance rating	1IM
Padding: density/thickness	30 (kg/m³) / 4 cm
Lateral offset	none
Under bed clearance	12 cm
Weight	70 kg

ACCESSORIES	CODE
Paper roll holder	1218010
Four castors	1218020
Terry towel couch cover 65 cm	1210040
Terry towel couch cover 80 cm	1210050
Double-ply paper roll	1210060

ACCESSORIES	CODE
Safety magnet	1218030
Safety double click	1218040
Swiss plug	1218050
UK 3-pin plug	1218051

FURNITURE FISIOTECH

WOODEN STOOL
Clear varnished hardwood beech stool. Maximum load 120 Kg.

MODELS	DIMENSIONS	CODE
Small	18 x 37 x 15 cm	1612201
Big	30 x 50 x 45 cm	1612202

WOODEN CHAIR
Clear-varnished beech wood chairs with or without armrests. Maximum load 110 Kg.

MODELS	DIMENSIONS	CODE
Without armrests	51 x 53 x 82 cm	1611203
With armrests	56 x 59 x 82 cm	1611204

MOVING MEDICAL TROLLEY
Multi-purpose medical trolley. It can be fully disassembled. RAL 9001 powder-coated steel tube, RAL 7035 powder-coated steel shelves, complete with Ø 5 cm swivel castors.

TECHNICAL SPECIFICATIONS	
Width	50 / 65 cm
Depth	34 / 45 cm
Height	82 cm

MODELS	DIMENSIONS	CODE
Small, two shelves	50 x 34 x 82 cm	1614010
Small, three shelves	50 x 34 x 82 cm	1614020
Big, two shelves	65 x 45 x 82 cm	1614030
Big, three shelves	65 x 45 x 82 cm	1614040

NEW BED FISIOTECH

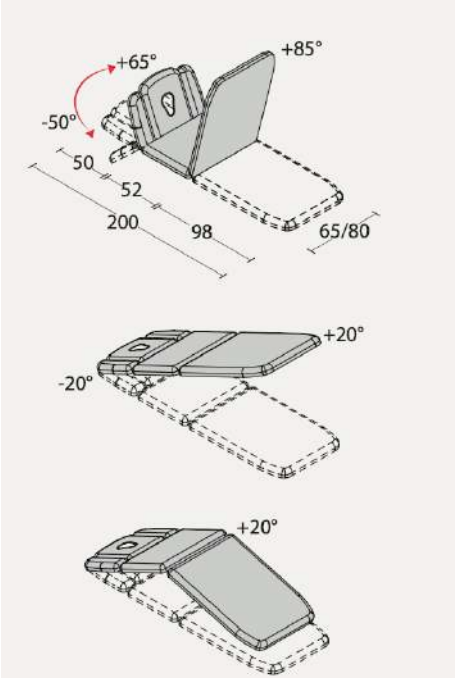

TECHNICAL SPECIFICATIONS	
Height adjustment	electrical or hydraulic 47-92 cm
Length	200 cm
Width	65 / 80 cm
Max. working load	200 kg
Headrest adjustment	with gas spring +65° -50°
Armrests on headrest adjustment	manual
Middle section adjustment	with gas spring or electrically +20°
Footrest adjustment	with gas spring +85°
Trendelenburg position	+20°
Breathing hole and bung	as standard
Padding and upholstery fire-resistance rating	1IM
Padding: density/thickness	30 (kg/m³) / 4 cm
Lateral offset	24 cm
Under bed clearance (model with all round bar excluded)	12 cm
Weight	85 kg

ACCESSORIES	CODE
Paper roll holder	1210010
Four castors	1218020
Safety magnet	1221030
Safety double click	1221040

ACCESSORIES	CODE
Swiss plug	1221050
UK 3-pin plug	1221060
Double-ply paper roll	1210060

BED FISIOTECH

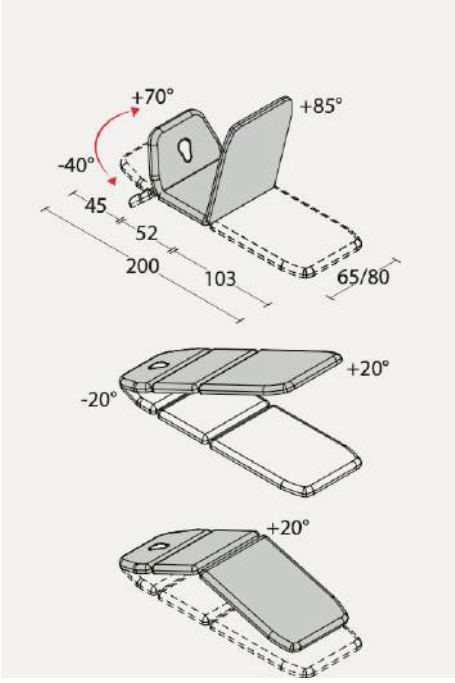

TECHNICAL SPECIFICATIONS	
Height adjustment	electrical or hydraulic 49-95 cm
Length	200 cm
Width	65 / 80 cm
Max. working load	200 kg
Headrest adjustment	with gas spring +70° -40°
Middle section adjustment	with gas spring or electrically +20°
Footrest adjustment	with gas spring +85°
Trendelenburg position	+20°
Breathing hole and bung	as standard
Padding and upholstery fire-resistance rating	1IM
Padding: density/thickness	30 (kg/m³) / 4 cm
Lateral offset	none
Under bed clearance	12 cm
Weight	70 kg

ACCESSORIES	CODE
Paper roll holder	1218010
Four castors	1218020
Terry towel couch cover 65 cm	1210040
Terry towel couch cover 80 cm	1210050
Double-ply paper roll	1210060

ACCESSORIES	CODE
Safety magnet	1218030
Safety double click	1218040
Swiss plug	1218050
UK 3-pin plug	1218051

FURNITURE FISIOTECH

MULTI-PURPOSE TROLLEY
Multi-purpose trolley with welded 18/10 (AISI 304) stainless steel 25-mm tube structure.

With two stainless steel pushing handles.
Complete with four swivel castors Ø125 mm and bumpers.

TECHNICAL SPECIFICATIONS	
Width	82 cm
Depth	52 cm
Height	82 cm

MODELS	CODE
With two shelves	1614101
With two horizontal drawers	1614111

Code 1614101

Code 1614111

COUCH STAIRS
Couch stairs with chrome-plated structure and nonslip steps.

TECHNICAL SPECIFICATIONS	
Step depth	20 cm
Step width	38 cm
First step height	22 cm
Second step height	44 cm
Maximum load	150 kg

MODELS	DIMENSIONS	CODE
Single step	39 x 28 x 22 cm	1612101
Two steps	39 x 52 x 44 cm	1612102

Code 1612101

Code 1612102

NEW BED FISIOTECH

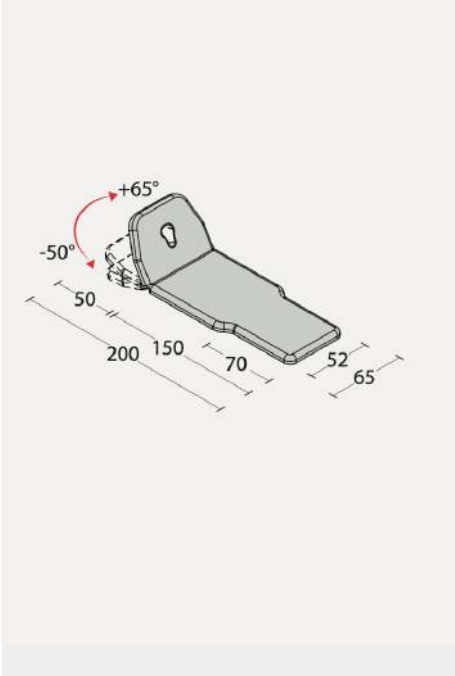

TECHNICAL SPECIFICATIONS	
Height adjustment	electrical or hydraulic 47-92 cm
Length	200 cm
Width	65 cm
Max. working load	200 kg
Headrest adjustment	with gas spring +65° -50°
Breathing hole and bung	as standard
Padding and upholstery fire-resistance rating	1IM
Padding: density/thickness	30 (kg/m³) / 4 cm
Lateral offset	24 cm
Under bed clearance (model with all round bar excluded)	12 cm
Weight	70 kg

ACCESSORIES	CODE
Paper roll holder	1210010
Four castors	1218020
Safety magnet	1221030
Safety double click	1221040

ACCESSORIES	CODE
Swiss plug	1221050
Presa UK	1221060
UK 3-pin plug	1210060

BED FISIOTECH

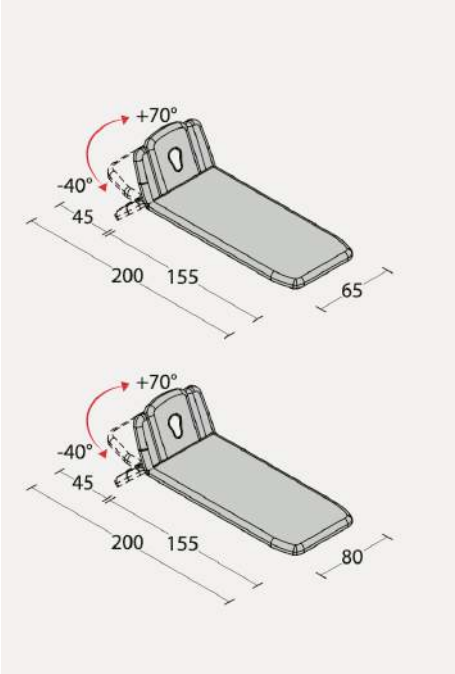

TECHNICAL SPECIFICATIONS	
Height adjustment	electrical or hydraulic 49-95 cm
Length	200 cm
Width	65 / 80 cm
Max. working load	200 kg
Headrest adjustment	with gas spring +70° -40°
Armrests on headrest adjustment	manual
Breathing hole and bung	as standard
Padding and upholstery fire-resistance rating	1IM
Padding: density/thickness	30 (kg/m³) / 4 cm
Lateral offset	none
Under bed clearance	12 cm
Weight	70 kg

ACCESSORIES	CODE
Paper roll holder	1218010
Four castors	1218020
Terry towel couch cover 65 cm	1210040
Terry towel couch cover 80 cm	1210050
Double-ply paper roll	1210060

ACCESSORIES	CODE
Safety magnet	1218030
Safety double click	1218040
Swiss plug	1218050
UK 3-pin plug	1218051

FURNITURE FISIOTECH

CHANGING ROOM BENCHES
Simple changing room bench, varnished steel tube frame and wooden planks.

TECHNICAL SPECIFICATIONS	
Height	45 cm
Depth	35 cm

MODELS	CODE
Width 1 mt	1613021
Width 2 mt	1613022

Code 1613021

Code 1613022

CHANGING ROOM BENCHES
Changing room bench with backrest, varnished steel tube frame and wooden planks.

TECHNICAL SPECIFICATIONS	
Height	85 cm
Depth	40 cm

MODELS	CODE
Width 1 mt	1613023
Width 2 mt	1613024

Code 1613023

Code 1613024

CHANGING ROOM BENCHES
Complete changing room bench, varnished steel tube frame and wooden planks.

TECHNICAL SPECIFICATIONS	
Height	180 cm
Depth	40 cm

MODELS	CODE
Width 1 mt	1613025
Width 2 mt	1613026

Code 1613025

Code 1613026

NEW BED FISIOTECH

Model shown Code 1121F30C1CB1 + Accessories Code 1218020

Model shown Code 1121F30C1SB1 + Accessories Code 1218020

Retractable castors

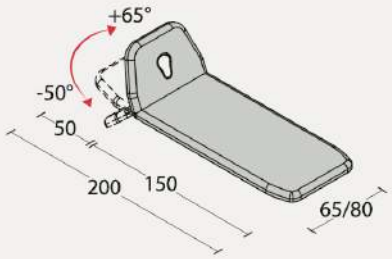

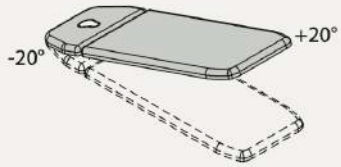

TECHNICAL SPECIFICATIONS	
Height adjustment	electrical or hydraulic 47-92 cm
Length	200 cm
Width	65 / 80 cm
Max. working load	200 kg
Headrest adjustment	with gas spring +65°-50°
Trendelenburg Position	with gas spring +20°
Breathing hole and bung	as standard
Padding and upholstery fire-resistance rating	1IM
Padding: density/thickness	30 (kg/m³) / 4 cm
Lateral offset	24 cm
Under bed clearance (model with all round bar excluded)	12 cm
Weight	75 kg

ACCESSORIES	CODE
Paper roll holder	1210010
Four castors	1218020
Safety magnet	1221030
Safety double click	1221040

ACCESSORIES	CODE
Swiss plug	1221050
UK 3-pin plug	1221060
Double-ply paper roll	1210060

BED FISIOTECH

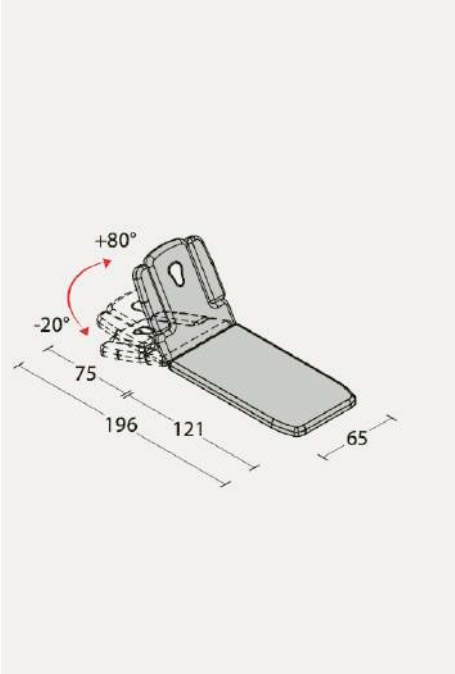

TECHNICAL SPECIFICATIONS	
Height adjustment	electrical or hydraulic 49-95 cm
Length	200 cm
Width	65 cm
Max. working load	200 kg
Headrest adjustment	with gas spring +80° -20°
Armrests on headrest adjustment	manual
Breathing hole and bung	as standard
Padding and upholstery fire-resistance rating	1IM
Padding: density/thickness	30 (kg/m³) / 4 cm
Lateral offset	none
Under bed clearance	12 cm

ACCESSORIES	CODE
Paper roll holder	1218010
Four castors	1218020
Terry towel couch cover 65 cm	1210040
Double-ply paper roll	1210060

ACCESSORIES	CODE
Safety magnet	1218030
Safety double click	1218040
Swiss plug	1218050
UK 3-pin plug	1218051

FURNITURE FISIOTECH

WALL CLOTHES RACK
Wall clothes rack with bag rack, varnished steel structure and wooden planks.

MODELS	CODE
Width 1 mt with 3 hooks	1613031
Width 2 mt with 6 hooks	1613032

Code 1613032

SIMPLE CLOTHES RACK
Wooden wall clothes rack.

MODELS	CODE
Width 1 mt with 3 hooks	1613033
Width 2 mt with 6 hooks	1613034

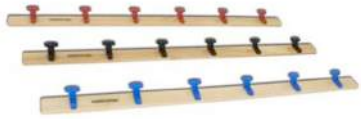

Code 1613034

FOOTREST
Wooden footrest with rubber feet..

MODELS	CODE
Width 1 mt	1613041
Width 2 mt	1613042

NEW BED FISIOTECH

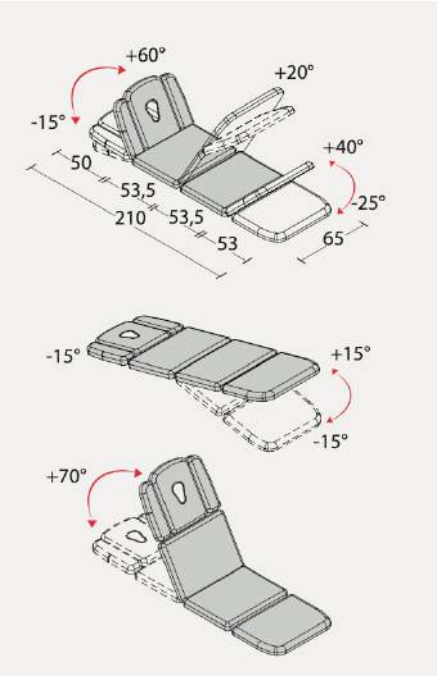

TECHNICAL SPECIFICATIONS	
Height adjustment	electrical 58-102 cm
Length	210 cm
Width	65 cm
Max. working load	200 kg
Headrest adjustment	with gas spring +60° -15°
Armrests on headrest adjustment	manual
Middle section adjustment	electrically +70° -15°
Upper footrest adjustment	electrically +20° -15°
Lower footrest adjustment	with gas spring +40° -25°
Trendelenburg / AntiTrendelenburg position	with gas spring and electrically 15°
Breathing hole and bung	as standard
Padding and upholstery fire-resistance rating	1IM
Padding: density/thickness	30 (kg/m³) / 4 cm
Lateral offset	24 cm
Under bed clearance (model with all round bar excluded)	12 cm
Weight	105 kg

ACCESSORIES	CODE
Floor paper roll holder	1210020
Four castors	1218020
Safety magnet	1221030

ACCESSORIES	CODE
Swiss plug	1221050
UK 3-pin plug	1221060
Double-ply paper roll	1210060

BED FISIOTECH

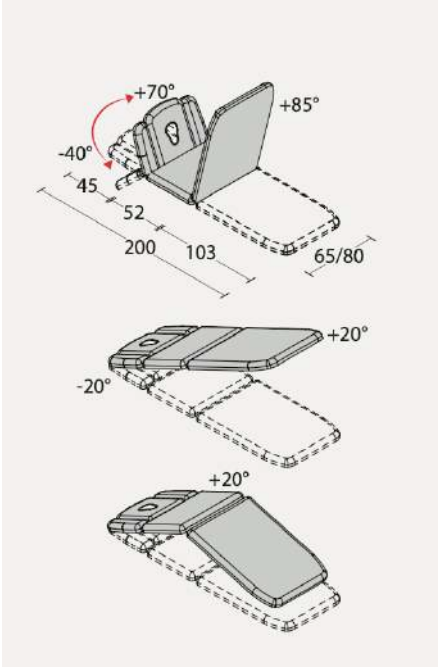

TECHNICAL SPECIFICATIONS	
Height adjustment	electrical or hydraulic 49-95 cm
Length	200 cm
Width	65 / 80 cm
Max. working load	200 kg
Headrest adjustment	with gas spring +70° -40°
Armrests on headrest adjustment	manual
Middle section adjustment	with gas spring or electrically +20°
Footrest adjustment	with gas spring +85°
Trendelenburg position	+20°
Breathing hole and bung	as standard
Padding and upholstery fire-resistance rating	1IM
Padding: density/thickness	30 (kg/m³) / 4 cm
Lateral offset	none
Under bed clearance	12 cm
Weight	70 kg

ACCESSORIES	CODE
Paper roll holder	1218010
Four castors	1218020
Terry towel couch cover 65 cm	1210040
Terry towel couch cover 80 cm	1210050
Double-ply paper roll	1210060

ACCESSORIES	CODE
Safety magnet	1218030
Safety double click	1218040
Swiss plug	1218050
UK 3-pin plug	1218051

NEW BED FISIOTECH

Model shown Code 1121N30C25G4 + Accessories Code 1218020

All around foot bar switch

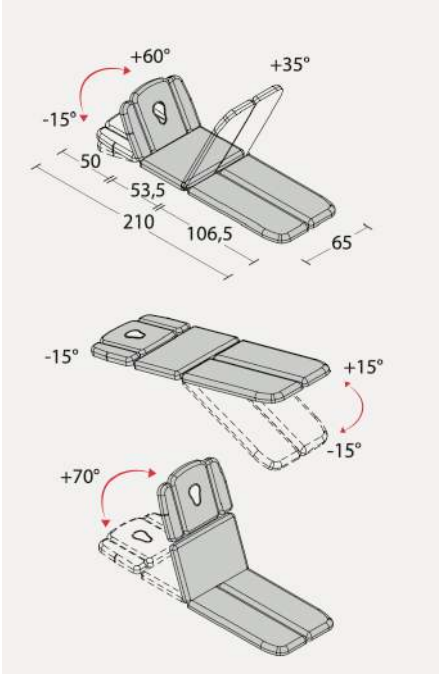

TECHNICAL SPECIFICATIONS	
Height adjustment	electrical 58-102 cm
Length	210 cm
Width	65 cm
Max. working load	200 kg
Headrest adjustment	with gas spring +60° -15°
Armrests on headrest adjustment	manual
Middle section adjustment	electrically +70° -15°
Footrest adjustment	with gas spring +35° -15°
Trendelenburg / AntiTrendelenburg position	with gas spring and electrically 15°
Breathing hole and bung	as standard
Padding and upholstery fire-resistance rating	1IM
Padding: density/thickness	30 (kg/m³) / 4 cm
Lateral offset	24 cm
Under bed clearance (model with all round bar excluded)	12 cm
Weight	100 kg

OPTIONAL	CODICE
Floor paper roll holder	1210020
Four castors	1218020
Safety magnet	1221030

OPTIONAL	CODICE
Swiss plug	1221050
UK 3-pin plug	1221060
Double-ply paper roll	1210060

BED FISIOTECH

Model shown Code 1118F20A15A1 + Accessories Code 1218020

Manual armrest adjustment

Aluminium all around foot bar switch

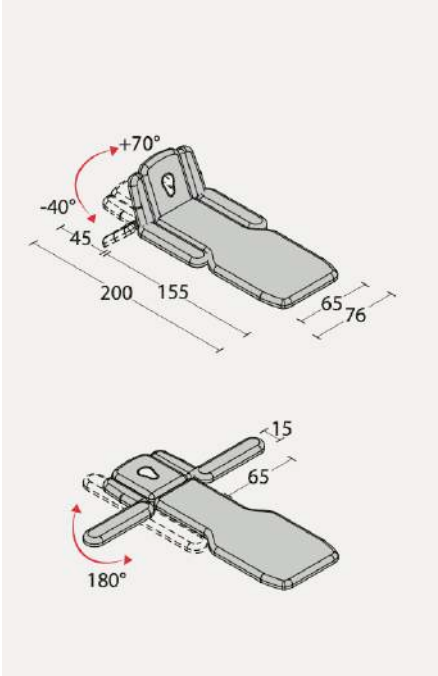

TECHNICAL SPECIFICATIONS	
Height adjustment	electrical or hydraulic 49-95 cm
Length	200 cm
Width	65 cm
Max. working load	200 kg
Headrest adjustment	with gas spring +70° -40°
Armrests on headrest adjustment	manual
Removable armrests rotating by	180°
Breathing hole and bung	as standard
Padding and upholstery fire-resistance rating	1IM
Padding: density/thickness	30 (kg/m³) / 4 cm
Lateral offset	none
Under bed clearance	12 cm
Weight	70 kg

ACCESSORIES	CODE
Paper roll holder	1218010
Four castors	1218020
Double-ply paper roll	1210060
Safety magnet	1218030

ACCESSORIES	CODE
Safety double click	1218040
Swiss plug	1218050
UK 3-pin plug	1218051

NEW BED FISIOTECH

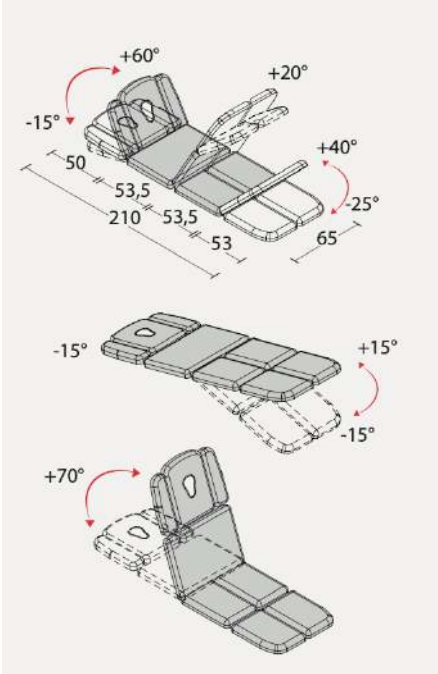

TECHNICAL SPECIFICATIONS	
Height adjustment	electrical 58-102 cm
Length	210 cm
Width	65 cm
Max. working load	200 kg
Headrest adjustment	with gas spring +60° -15°
Armrests adjustment	manual
Middle section adjustment	electrically +70° -15°
Footrests adjustment	with gas spring +35° -15°
Trendelenburg / AntiTrendelenburg position	with gas spring and electrically 15°
Breathing hole and bung	as standard
Padding and upholstery fire-resistance rating	1IM
Padding: density/thickness	30 (kg/m³) / 4 cm
Lateral offset	24 cm
Under bed clearance (model with all round bar excluded)	12 cm
Weight	105 kg

ACCESSORIES	CODE
Floor paper roll holder	1210020
Four castors	1218020
Safety magnet	1221030

ACCESSORIES	CODE
Swiss plug	1221050
UK 3-pin plug	1221060
Double-ply paper roll	1210060

BED FISIOTECH

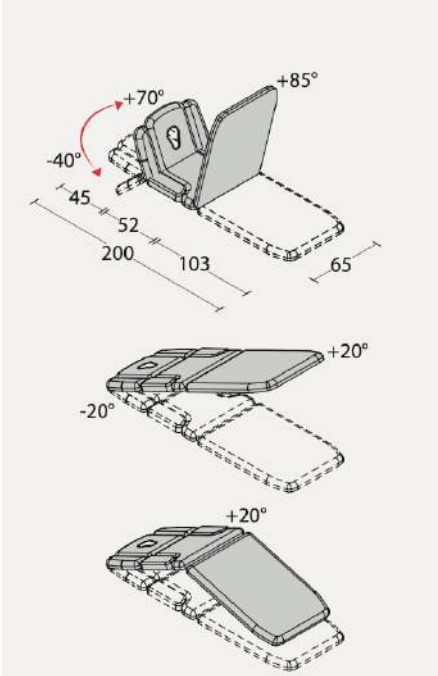

TECHNICAL SPECIFICATIONS	
Height adjustment	electrical 49-95 cm
Length	200 cm
Width	65 cm
Max. working load	200 kg
Headrest adjustment	with gas spring +70° -40°
Armrests on headrest adjustment	manual
Middle section adjustment	electrically +20°
Middle section armrests	foldable
Footrest adjustment	with gas spring +85°
Trendelenburg position	+20°
Breathing hole and bung	as standard
Padding and upholstery fire-resistance rating	1IM
Padding: density/thickness	30 (kg/m³) / 4 cm
Lateral offset	none
Under bed clearance	12 cm
Weight	70 kg

ACCESSORIES	CODE
Paper roll holder	1218010
Four castors	1218020
Terry towel couch cover 65 cm	1210040
Double-ply paper roll	1210060

ACCESSORIES	CODE
Safety magnet	1218030
Safety double click	1218040
Swiss plug	1218050
UK 3-pin plug	1218051

BED FISIOTECH

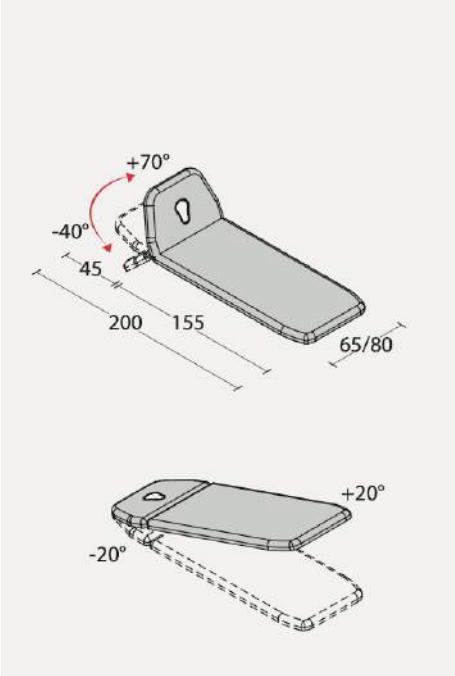

TECHNICAL SPECIFICATIONS	
Height adjustment	electrical or hydraulic 49-95 cm
Length	200 cm
Width	65 / 80 cm
Max. working load	200 kg
Headrest adjustment	with gas spring +70° -40°
Trendelenburg position	with gas spring or electrically +20°
Breathing hole and bung	as standard
Padding and upholstery fire-resistance rating	1IM
Padding: density/thickness	30 (kg/m³) / 4 cm
Lateral offset	none
Under bed clearance	12 cm
Weight	70 kg

ACCESSORIES	CODE
Paper roll holder	1218010
Four castors	1218020
Terry towel couch cover 65 cm	1210040
Terry towel couch cover 80 cm	1210050
Double-ply paper roll	1210060

ACCESSORIES	CODE
Safety magnet	1218030
Safety double click	1218040
Swiss plug	1218050
UK 3-pin plug	1218051

BED FISISOTECH

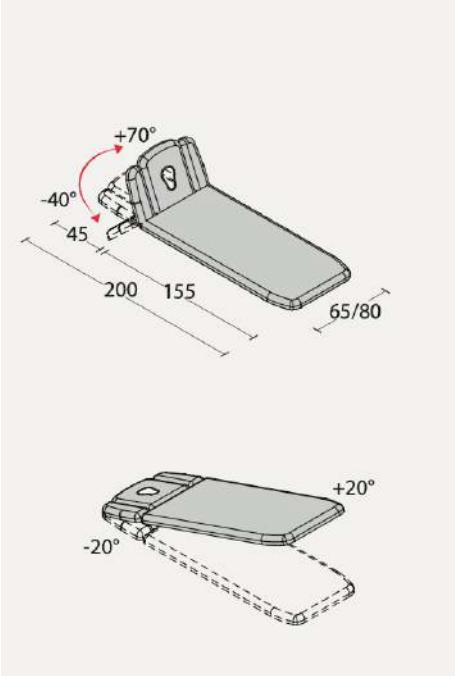

TECHNICAL SPECIFICATIONS	
Height adjustment	electrical or hydraulic 49-95 cm
Length	200 cm
Width	65 / 80 cm
Max. working load	200 kg
Headrest adjustment	with gas spring +70° -40°
Armrests on headrest adjustment	manual
Trendelenburg position	with gas spring or electrically +20°
Breathing hole and bung	as standard
Padding and upholstery fire-resistance rating	1IM
Padding: density/thickness	30 (kg/m³) / 4 cm
Lateral offset	none
Under bed clearance	12 cm
Weight	70 kg

ACCESSORIES	CODE
Paper roll holder	1218010
Four castors	1218020
Terry towel couch cover 65 cm	1210040
Terry towel couch cover 80 cm	1210050
Double-ply paper roll	1210060

ACCESSORIES	CODE
Safety magnet	1218030
Safety double click	1218040
Swiss plug	1218050
UK 3-pin plug	1218051

BED FISIOTECH

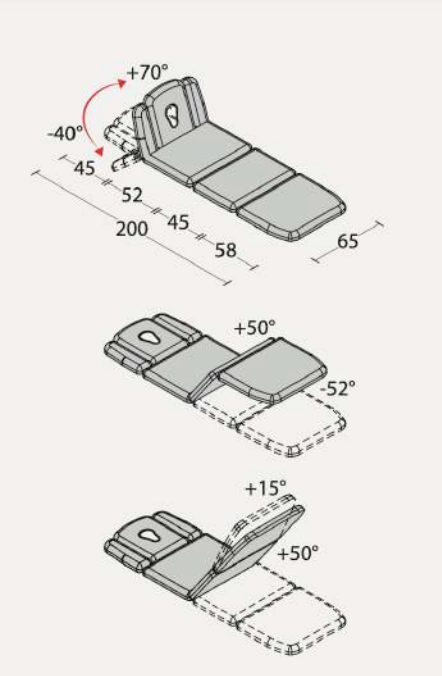

TECHNICAL SPECIFICATIONS	
Height adjustment	electrical or hydraulic 49-95 cm
Length	200 cm
Width	65 cm
Max. working load	200 kg
Headrest adjustment	with gas spring +70° -40°
Armrests on headrest adjustment	manual
Middle section	fixed
Upper footrest adjustment	with gas spring +50°
Lower footrest adjustment	with gas spring +15° -52°
Breathing hole and bung	as standard
Padding and upholstery fire-resistance rating	1IM
Padding: density/thickness	30 (kg/m³) / 4 cm
Lateral offset	none
Under bed clearance	12 cm
Weight	90 kg

ACCESSORIES	CODE
Paper roll holder	1218010
Four castors	1218020
Terry towel couch cover 65 cm	1210040
Double-ply paper roll	1210060

ACCESSORIES	CODE
Safety magnet	1218030
Safety double click	1218040
Swiss plug	1218050
UK 3-pin plug	1218051

BED FISISOTECH

Model shown Code 1111A10C1582 + Accessories Code 1211010

All around foot bar switch

Hydraulic control

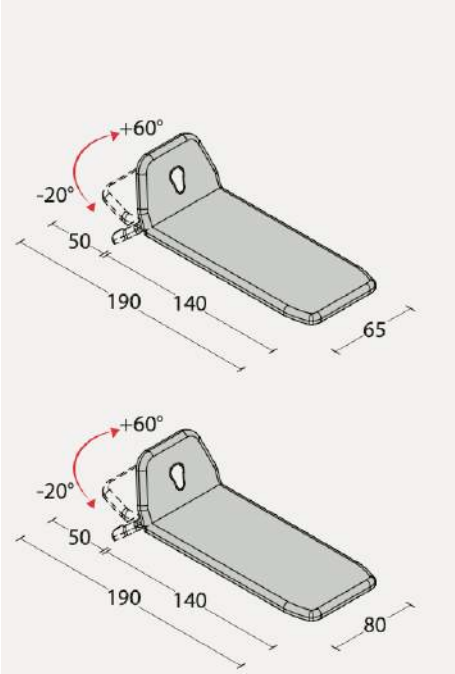

TECHNICAL SPECIFICATIONS	
Height adjustment	electrical or hydraulic 45-90 cm
Length	190 cm
Width	65 / 80 cm
Max. working load	200 kg
Headrest adjustment	with gas spring +60° -20°
Breathing hole and bung	as standard
Padding and upholstery fire-resistance rating	1IM
Padding: density/thickness	30 (kg/m³) / 4 cm
Lateral offset	17 cm
Weight	70 kg

ACCESSORIES	CODE
Paper roll holder	1210010
Four castors	1211010
Collapsible cotsides	1210030
Terry towel couch cover 65 cm	1210040
Terry towel couch cover 80 cm	1210050

ACCESSORIES	CODE
Double-ply paper roll	1210060
Safety magnet	1211020
Safety double click	1211030
Swiss plug	1211040
UK 3-pin plug	1211041

BED FISIOTECH

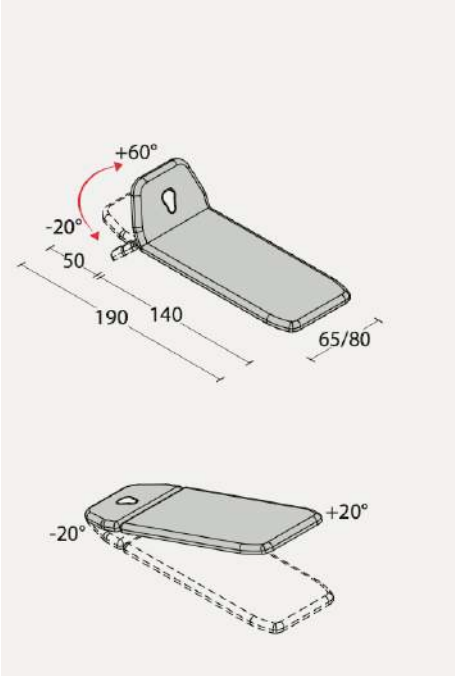

TECHNICAL SPECIFICATIONS	
Height adjustment	electrical or hydraulic 45-90 cm
Length	190 cm
Width	65 / 80 cm
Max. working load	200 kg
Headrest adjustment	with gas spring +60° -20°
Trendelenburg position	with gas spring +20°
Breathing hole and bung	as standard
Padding and upholstery fire-resistance rating	1IM
Padding: density/thickness	30 (kg/m³) / 4 cm
Lateral offset	17 cm
Weight	70 kg

ACCESSORIES	CODE
Paper roll holder	1210010
Four castors	1211010
Terry towel couch cover 65 cm	1210040
Terry towel couch cover 80 cm	1210050
Double-ply paper roll	1210060

ACCESSORIES	CODE
Safety magnet	1211020
Safety double click	1211030
Swiss plug	1211040
UK 3-pin plug	1211041

BED FISIOTECH

Model shown Code 1111C10C1SB1 + Accessories Code 1211010

All around foot bar switch

Hydraulic control

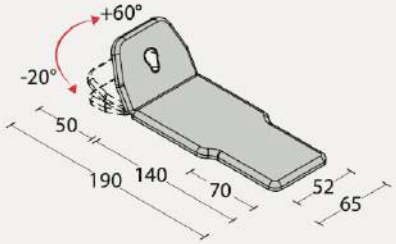

TECHNICAL SPECIFICATIONS	
Height adjustment	electrical or hydraulic 45-90 cm
Length	190 cm
Width	65 cm
Max. working load	200 kg
Headrest adjustment	with gas spring +60° -20°
Breathing hole and bung	as standard
Padding and upholstery fire-resistance rating	1IM
Padding: density/thickness	30 (kg/m³) / 4 cm
Lateral offset	17 cm
Weight	70 kg

ACCESSORIES	CODE
Paper roll holder	1218010
Four castors	1211010
Double-ply paper roll	1210060
Safety magnet	1211020

ACCESSORIES	CODE
Safety double click	1211030
Swiss plug	1211040
UK 3-pin plug	1211041

BED FISIOTECH

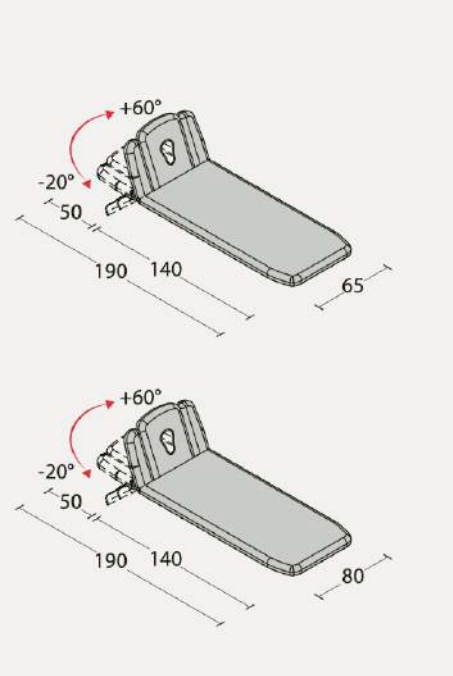

TECHNICAL SPECIFICATIONS	
Height adjustment	electrical or hydraulic 45-90 cm
Length	190 cm
Width	65 / 80 cm
Max. working load	200 kg
Headrest adjustment	with gas spring +60° -20°
Armrests on headrest adjustment	manual
Breathing hole and bung	as standard
Padding and upholstery fire-resistance rating	1IM
Padding: density/thickness	30 (kg/m³) / 4 cm
Lateral offset	17 cm
Weight	70 kg

ACCESSORIES	CODE
Paper roll holder	1210010
Four castors	1211010
Collapsible cotsides	1210030
Terry towel couch cover 65 cm	1210040
Terry towel couch cover 80 cm	1210050

ACCESSORIES	CODE
Double-ply paper roll	1210060
Safety magnet	1211020
Safety double click	1211030
Swiss plug	1211040
UK 3-pin plug	1211041

BED FISIOTECH

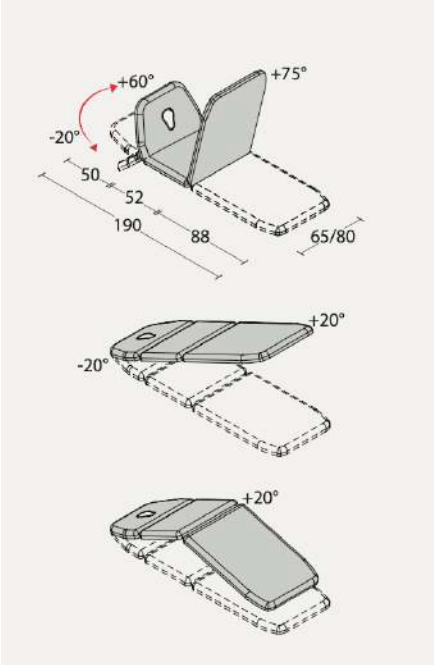

TECHNICAL SPECIFICATIONS	
Height adjustment	electrical or hydraulic 45-90 cm
Length	190 cm
Width	65 / 80 cm
Max. working load	200 kg
Headrest adjustment	with gas spring +60° -20°
Middle section adjustment	with gas spring +20°
Footrest adjustment	with gas spring +75°
Trendelenburg position	+20°
Breathing hole and bung	as standard
Padding and upholstery fire-resistance rating	1IM
Padding: density/thickness	30 (kg/m³) / 4 cm
Lateral offset	17 cm
Weight	70 kg

ACCESSORIES	CODE
Paper roll holder	1210010
Four castors	1211010
Terry towel couch cover 65 cm	1210040
Terry towel couch cover 80 cm	1210050
Double-ply paper roll	1210060

ACCESSORIES	CODE
Safety magnet	1211020
Safety double click	1211030
Swiss plug	1211040
UK 3-pin plug	1211041

BED FISIOTECH

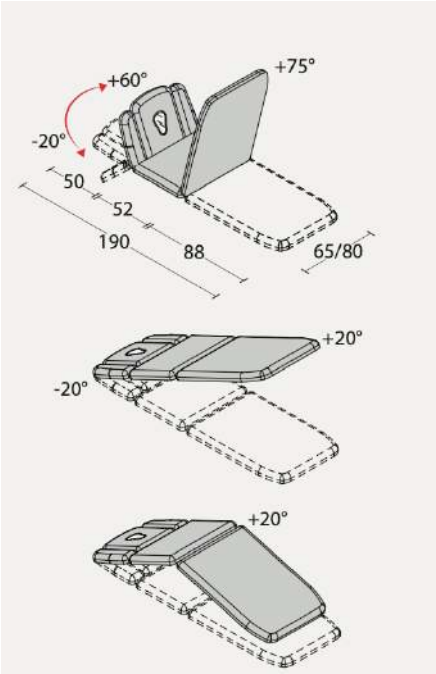

TECHNICAL SPECIFICATIONS	
Height adjustment	electrical or hydraulic 45-90 cm
Length	190 cm
Width	65 / 80 cm
Max. working load	200 kg
Headrest adjustment	with gas spring +60° -20°
Armrests on headrest adjustment	manual
Middle section adjustment	with gas spring +20°
Footrest adjustment	with gas spring +75°
Trendelenburg position	+20°
Breathing hole and bung	as standard
Padding and upholstery fire-resistance rating	1IM
Padding: density/thickness	30 (kg/m³) / 4 cm
Lateral offset	17 cm
Weight	70 kg

ACCESSORIES	CODE
Paper roll holder	1210010
Four castors	1211010
Terry towel couch cover 65 cm	1210040
Terry towel couch cover 80 cm	1210050
Double-ply paper roll	1210060

ACCESSORIES	CODE
Safety magnet	1211020
Safety double click	1211030
Swiss plug	1211040
UK 3-pin plug	1211041

BED FISIOTECH

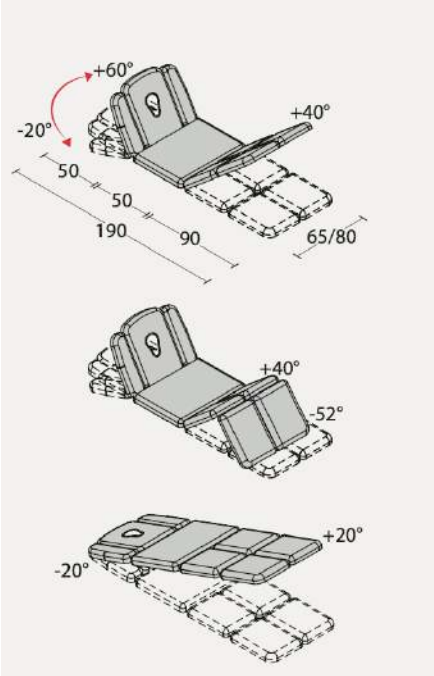

TECHNICAL SPECIFICATIONS	
Height adjustment	electrical or hydraulic 45-90 cm
Length	190 cm
Width	65 / 80 cm
Max. working load	200 kg
Headrest adjustment	with gas spring +60° -20°
Armrests on headrest adjustment	manual
Middle section adjustment	with gas spring +20°
Footrests adjustment	with gas spring +40° -52°
Trendelenburg position	+20°
Breathing hole and bung	as standard
Padding and upholstery fire-resistance rating	1IM
Padding: density/thickness	30 (kg/m³) / 4 cm
Lateral offset	17 cm
Weight	70 kg

ACCESSORIES	CODE
Paper roll holder	1210010
Four castors	1211010
Terry towel couch cover 65 cm	1210040
Terry towel couch cover 80 cm	1210050
Double-ply paper roll	1210060

ACCESSORIES	CODE
Safety magnet	1211020
Safety double click	1211030
Swiss plug	1211040
UK 3-pin plug	1211041

BED FISIOTECH

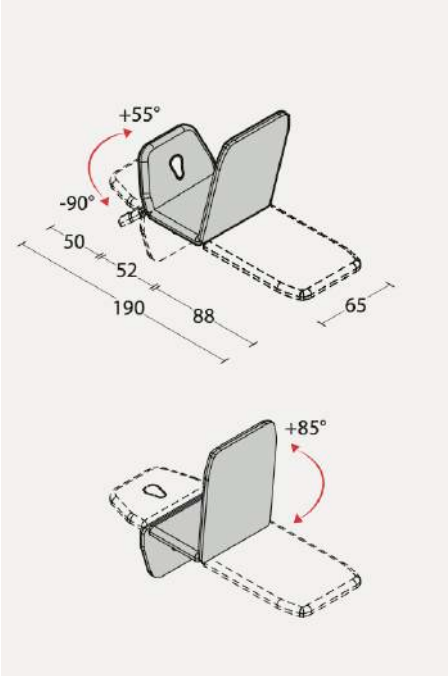

TECHNICAL SPECIFICATIONS	
Height adjustment	electrical or hydraulic 56-96 cm
Length	190 cm
Width	65 cm
Max. working load	200 kg
Headrest adjustment	with gas spring +55° -90°
Middle section	fixed
Footrest adjustment	with gas spring +85°
Breathing hole and bung	as standard
Padding and upholstery fire-resistance rating	1IM
Padding: density/thickness	30 (kg/m³) / 4 cm
Lateral offset	17 cm
Weight	70 kg

ACCESSORIES	CODE
Paper roll holder	1210010
Four castors	1211010
Terry towel couch cover 65 cm	1210040
Double-ply paper roll	1210060

ACCESSORIES	CODE
Safety magnet	1211020
Safety double click	1211030
Swiss plug	1211040
UK 3-pin plug	1211041

BED FISIOTECH

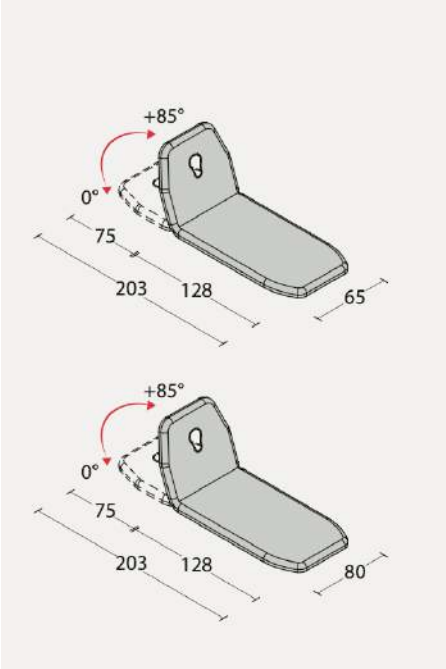

TECHNICAL SPECIFICATIONS	
Height adjustment	electrical or hydraulic 49-81 cm
Length	203 cm
Width	65 / 80 cm
Max. working load	200 kg
Headrest adjustment	with gas spring 0° +85°
Breathing hole and bung	as standard
Padding and upholstery fire-resistance rating	1IM
Padding: density/thickness	30 (kg/m³) / 4 cm
Lateral offset	35 cm
Under bed clearance	14,5 cm
Weight	60 kg

ACCESSORIES	CODE
Four castors	1212010
Paper roll holder	1210010
Collapsible cotsides	1210030
Terry towel couch cover 65 cm	1210040
Terry towel couch cover 80 cm	1210050

ACCESSORIES	CODE
Double-ply paper roll	1210060
Safety magnet	1212020
Safety double click	1212030
Swiss plug	1212040
UK 3-pin plug	1212041

BED FISIOTECH

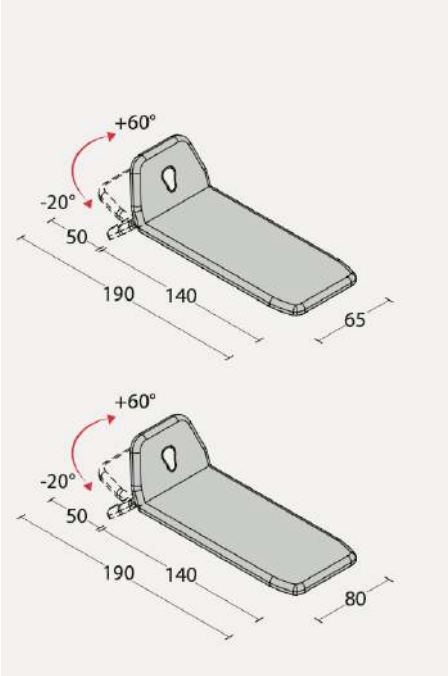

TECHNICAL SPECIFICATIONS	
Height adjustment	electrical or hydraulic 49-81 cm
Length	190 cm
Width	65 / 80 cm
Max. working load	200 kg
Headrest adjustment	with gas spring +60° -20°
Breathing hole and bung	as standard
Padding and upholstery fire-resistance rating	1IM
Padding: density/thickness	30 (kg/m³) / 4 cm
Lateral offset	35 cm
Under bed clearance	14,5 cm
Weight	60 kg

ACCESSORIES	CODE
Four castors	1212010
Paper roll holder	1210010
Collapsible cotsides	1210030
Terry towel couch cover 65 cm	1210040
Terry towel couch cover 80 cm	1210050

ACCESSORIES	CODE
Double-ply paper roll	1210060
Safety magnet	1212020
Safety double click	1212030
Swiss plug	1212040
UK 3-pin plug	1212041

BED FISIOTECH

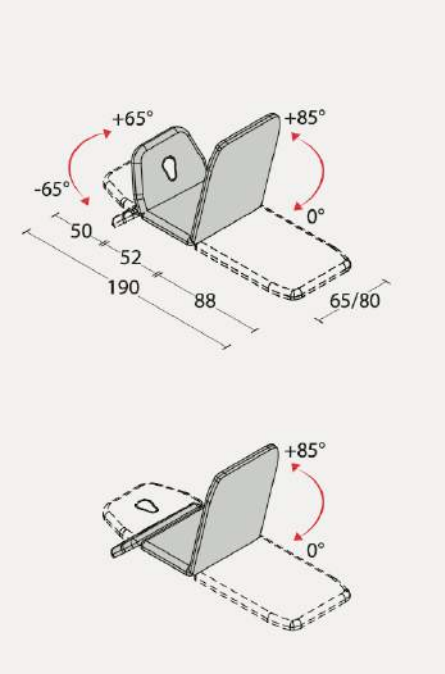

TECHNICAL SPECIFICATIONS	
Height adjustment	electrical or hydraulic 49-81 cm
Length	190 cm
Width	65 / 80 cm
Max. working load	200 kg
Headrest adjustment	with gas spring +65° -65°
Middle section	fixed
Footrest adjustment	with gas spring +85°
Breathing hole and bung	as standard
Padding and upholstery fire-resistance rating	1IM
Padding: density/thickness	30 (kg/m³) / 4 cm
Lateral offset	35 cm
Under bed clearance	14,5 cm
Weight	60 kg

ACCESSORIES	CODE
Four castors	1212010
Paper roll holder	1210010
Terry towel couch cover 65 cm	1210040
Terry towel couch cover 80 cm	1210050
Double-ply paper roll	1210060

ACCESSORIES	CODE
Safety magnet	1212020
Safety double click	1212030
Swiss plug	1212040
UK 3-pin plug	1212041

BED FISIOTECH

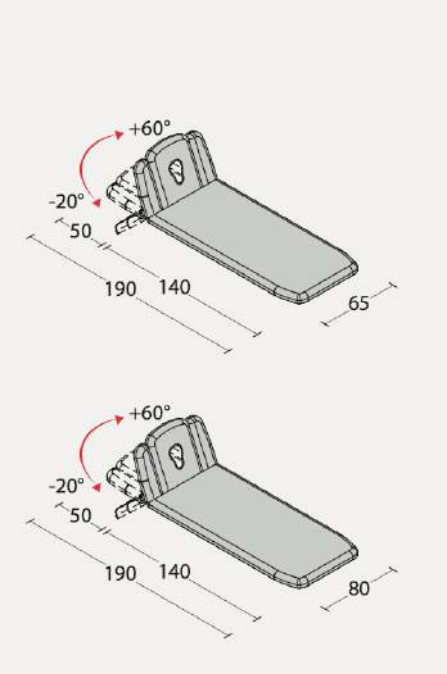

TECHNICAL SPECIFICATIONS	
Height adjustment	electrical or hydraulic 49-81 cm
Length	190 cm
Width	65 / 80 cm
Max. working load	200 kg
Headrest adjustment	with gas spring +60° -20°
Armrests on headrest adjustment	manual
Breathing hole and bung	as standard
Padding and upholstery fire-resistance rating	1IM
Padding: density/thickness	30 (kg/m³) / 4 cm
Lateral offset	35 cm
Under bed clearance	14,5 cm
Weight	60 kg

ACCESSORIES	CODE
Four castors	1212010
Paper roll holder	1210010
Collapsible cotsides	1210030
Terry towel couch cover 65 cm	1210040
Terry towel couch cover 80 cm	1210050

ACCESSORIES	CODE
Double-ply paper roll	1210060
Safety magnet	1212020
Safety double click	1212030
Swiss plug	1212040
UK 3-pin plug	1212041

BED FISIOTECH

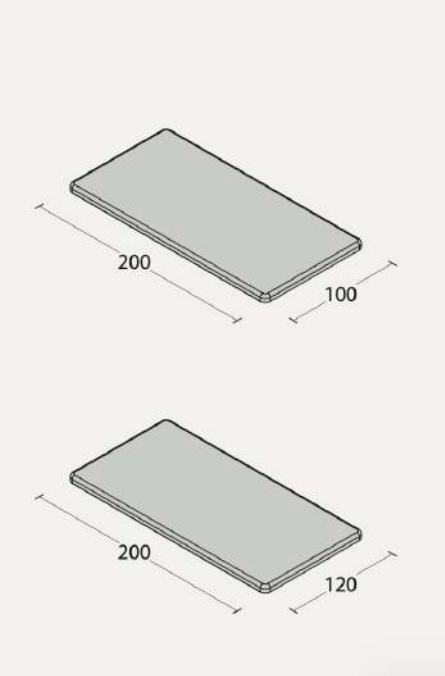

TECHNICAL SPECIFICATIONS	
Height adjustment	electrical 47-80 cm
Length	200 cm
Width	100 / 120 cm
Max. working load	200 kg
Padding and upholstery fire-resistance rating	1IM
Padding: density/thickness	30 (kg/m³) / 4 cm
Lateral offset	32 cm
Under bed clearance	17 cm
Weight	70 kg

ACCESSORIES	CODE
Four castors	1213010
Double foot pedal	1213030
Collapsible cotsides	1210030
Safety magnet	1213040

ACCESSORIES	CODE
Safety double click	1213050
Swiss plug	1213060
UK 3-pin plug	1213061

BED FISIOTECH

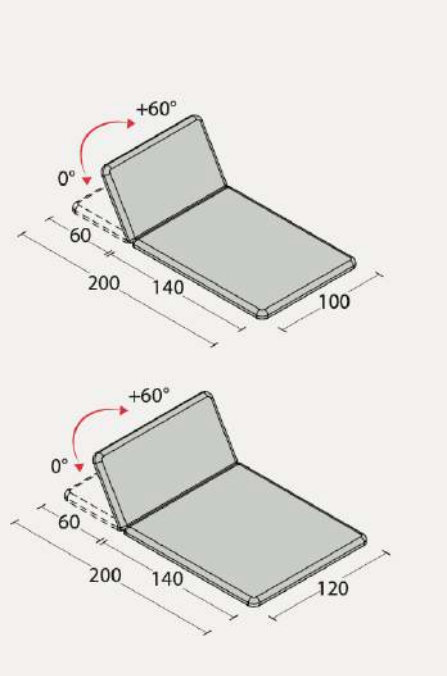

TECHNICAL SPECIFICATIONS	
Height adjustment	electrical 47-80 cm
Length	200 cm
Width	100 / 120 cm
Max. working load	200 kg
Headrest adjustment	with gas spring +60°
Padding and upholstery fire-resistance rating	1IM
Padding: density/thickness	30 (kg/m³) / 4 cm
Lateral offset	32 cm
Under bed clearance	17 cm
Weight	70 kg

ACCESSORIES	CODE
Four castors	1213010
Double foot pedal	1213030
Collapsible cotsides	1210030
Safety magnet	1213040

ACCESSORIES	CODE
Safety double click	1213050
Swiss plug	1213060
UK 3-pin plug	1213061

BED FISIOTECH

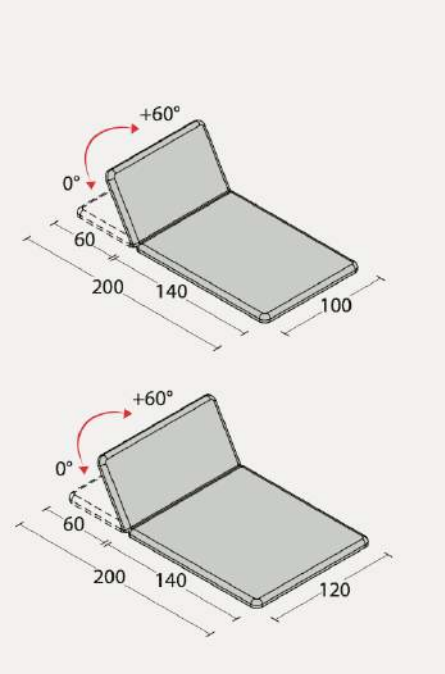

TECHNICAL SPECIFICATIONS	
Height adjustment	electrical 47-80 cm
Length	200 cm
Width	100 / 120 cm
Max. working load	200 kg
Headrest adjustment	manual +60°
Padding and upholstery fire-resistance rating	1IM
Padding: density/thickness	30 (kg/m³) / 4 cm
Lateral offset	32 cm
Under bed clearance	17 cm
Weight	70 kg

ACCESSORIES	CODE
Four castors	1213010
Double foot pedal	1213030
Collapsible cotsides	1210030
Safety magnet	1213040

ACCESSORIES	CODE
Safety double click	1213050
Swiss plug	1213060
UK 3-pin plug	1213061

BED FISIOTECH

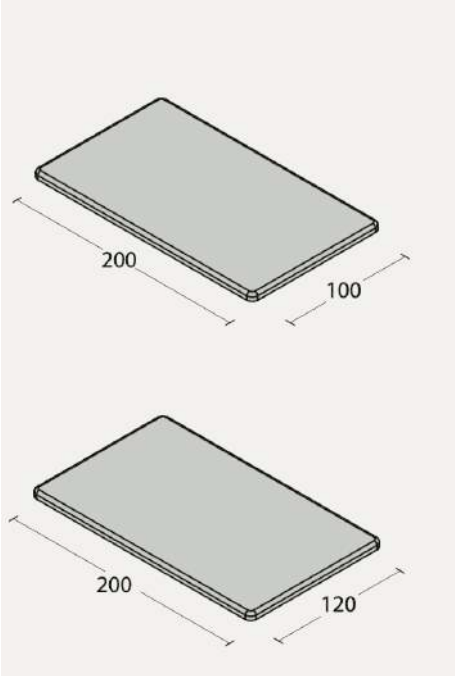

TECHNICAL SPECIFICATIONS	
Height adjustment	electrical 49-90 cm
Length	200 cm
Width	100 / 120 cm
Max. working load	350 kg
Padding and upholstery fire-resistance rating	1IM
Padding: density/thickness	30 (kg/m³) / 4 cm
Lateral offset	30 cm
Under bed clearance	15 cm
Weight	100 kg

ACCESSORIES	CODE
Four castors	1213020
Double foot pedal	1213030
Collapsible cotsides	1210030
Safety magnet	1213040

ACCESSORIES	CODE
Safety double click	1213050
Swiss plug	1213060
UK 3-pin plug	1213061

BED FISIOTECH

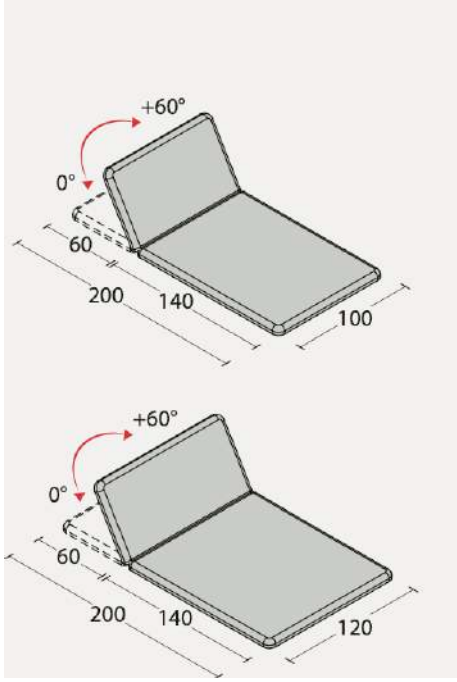

TECHNICAL SPECIFICATIONS	
Height adjustment	electrical 49-90 cm
Length	200 cm
Width	100 / 120 cm
Max. working load	350 kg
Headrest adjustment	with gas spring +60°
Padding and upholstery fire-resistance rating	1IM
Padding: density/thickness	30 (kg/m³) / 4 cm
Lateral offset	30 cm
Under bed clearance	15 cm
Weight	100 kg

ACCESSORIES	CODE
Four castors	1213020
Double foot pedal	1213030
Collapsible cotsides	1210030
Safety magnet	1213040

ACCESSORIES	CODE
Safety double click	1213050
Swiss plug	1213060
UK 3-pin plug	1213061

BED FISIOTECH

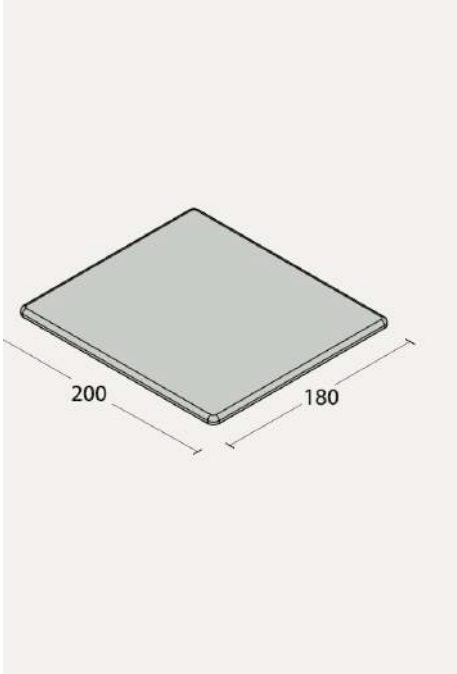

TECHNICAL SPECIFICATIONS	
Height adjustment	electrical 49-90 cm
Length	200 cm
Width	180 cm
Max. working load	250 kg
Padding and upholstery fire-resistance rating	1IM
Padding: density/thickness	30 (kg/m3) / 4 cm
Lateral offset	30 cm
Under bed clearance	15 cm
Weight	100 kg

ACCESSORIES	CODE
Four castors	1213021
Double foot pedal	1213030
Collapsible cotsides	1210030
Safety magnet	1213040

ACCESSORIES	CODE
Safety double click	1213050
Swiss plug	1213060
UK 3-pin plug	1213061

BED FISIOTECH

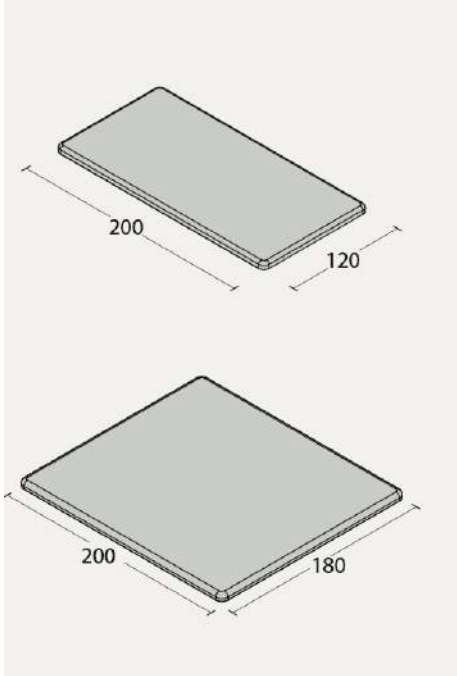

TECHNICAL SPECIFICATIONS	
Fixed height	50 cm
Length	200 cm
Width	120 / 180 cm
Max. working load	200 kg
Adjustable foot	
Padding and upholstery fire-resistance rating	1IM
Padding: density/thickness	30 (kg/m3) / 4 cm
Weight	50 kg

BED FISIOTECH

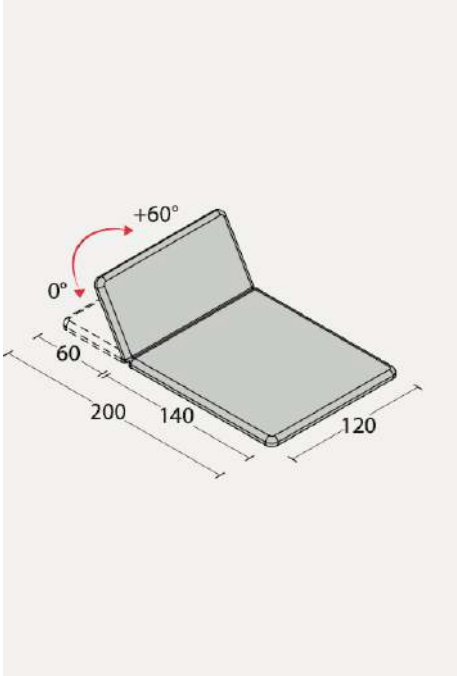

TECHNICAL SPECIFICATIONS	
Fixed height	50 cm
Length	200 cm
Width	120 cm
Max. working load	200 kg
Headrest adjustment	manual +60°
Adjustable foot	
Padding and upholstery fire-resistance rating	1IM
Padding: density/thickness	30 (kg/m3) / 4 cm
Weight	50 kg

BED FISIOTECH

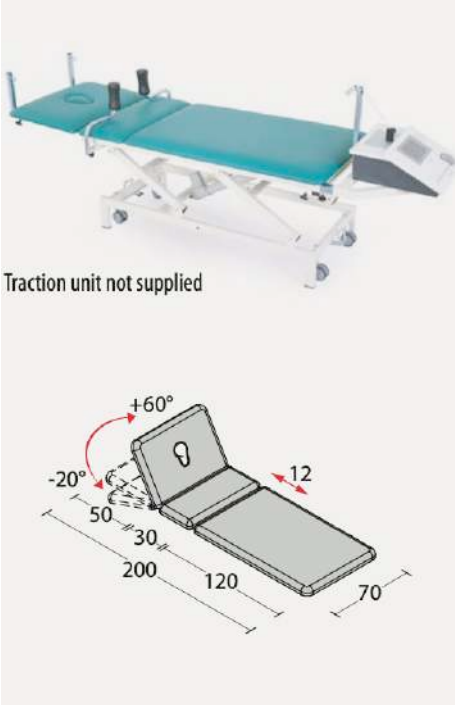

TECHNICAL SPECIFICATIONS	
Height adjustment	electrical 55-86 cm
Length	200 cm
Width	70 cm
Max. working load	200 kg
Headrest adjustment	with gas spring +60° -20°
Middle section	fixed
Main section	sliding by 12 cm
Chromed supports	as standard
With 4 castors	∅ 75 cm
Breathing hole and bung	as standard
Padding and upholstery fire-resistance rating	1IM
Padding: density/thickness	30 (kg/m³) / 4 cm
Lateral offset	32 cm
Under bed clearance	12 cm
Weight	70 kg

BED FISIOTECH

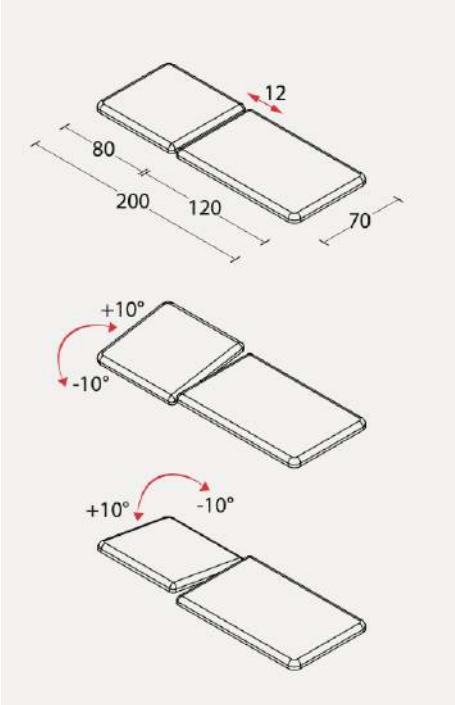

TECHNICAL SPECIFICATIONS	
Fixed height	65 cm
Length	200 cm
Width	70 cm
Max. working load	200 kg
Backrest tilt	10°
Main section	sliding by 12 cm
Adjustable feet	
Padding and upholstery fire-resistance rating	1IM
Padding: density/thickness	30 (kg/m3) / 4 cm
Weight	70 kg

BED FISIOTECH

The accessories on this page are all included in Adone and Dafne couches.
You can reorder them separately, too, and specify when appropriate the upholstery colour.

Code 1415408
WEDGE CUSHION
dimensions 45x45x15 cm

Code 1415601
TRAPEZOID CUSHION
dimensions 40x50x30 cm

Code 1415201
HALF-ROLL CUSHION
dimensions 30x16x8 cm

Code 1214010
SMALL THORACIC HARNESS
min/max width 60/100 cm

Code 1214020
LARGE THORACIC HARNESS
min/max width 70/130 cm

Code 1214030
SMALL PELVIC HARNESS
min/max width 60/100 cm

Code 1214040
LARGE PELVIC HARNESS
min/max width 70/130 cm

Code 1216021
HEAD HALTER

Code 1216023
SPREAD BAR

Code 1214035
SPREADER BAR

TILTING FISIOTECH

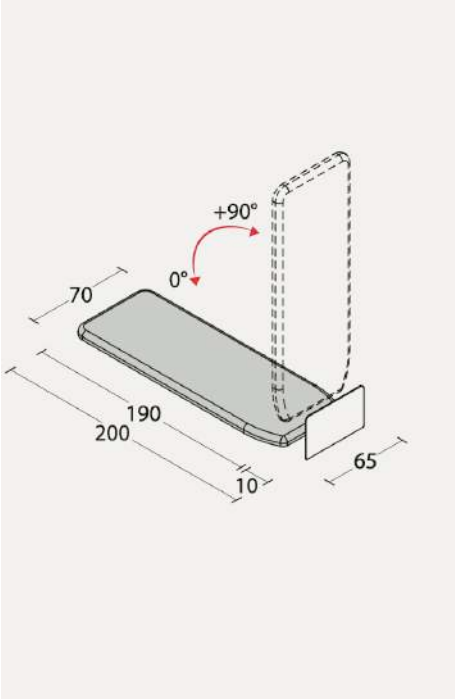

TECHNICAL SPECIFICATIONS	
Fixed height	50 cm
Upholstery dimensions	190 x 65 cm
Overall dimensions	200 x 70 cm
Max. working load	150 kg
Angle adjustment	electrical 0° +90°
Complete with emergency lever for actuator unlocking	Ø 12,5 cm
Complete with four swivel castors, of which two locking	
Complete with safety straps	3
Footboard	fixed
Padding and upholstery fire-resistance rating	1IM
Padding: density/thickness	30 (kg/m³) / 4 cm
Under bed clearance	15 cm
Weight	70 kg

ACCESSORIES	CODE
Axillary supports	1215030
Padded patient restraint	1215040
10 cm safety strap	1215050
Patient table	1215060

ACCESSORIES	CODE
Safety magnet	1215070
Safety double click	1215080
Swiss plug	1215090
UK 3-pin plug	1215091

TILTING FISIOTECH

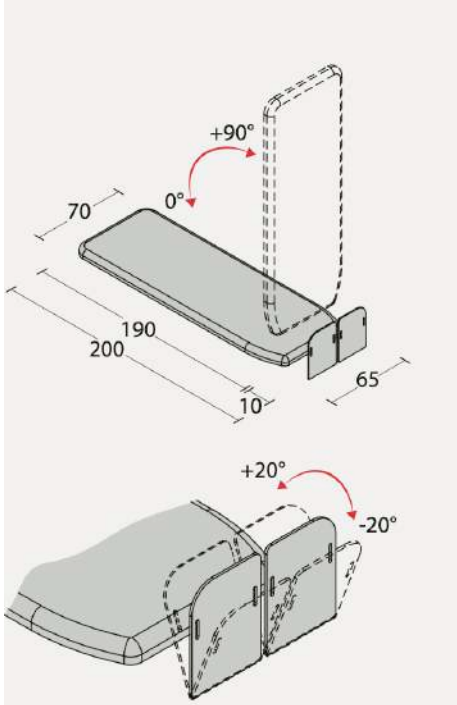

TECHNICAL SPECIFICATIONS	
Fixed height	50 cm
Upholstery dimensions	190 x 65 cm
Overall dimensions	200 x 70 cm
Max. working load	150 kg
Angle adjustment	electrical 0° +90°
Complete with emergency lever for actuator unlocking	
Complete with four swivel castors, of which two locking	∅ 12,5 cm
Complete with safety straps	3
Independent footboards adjustment	manual +20° -20°
Padding and upholstery fire-resistance rating	1IM
Padding: density/thickness	30 (kg/m³) / 4 cm
Under bed clearance	15 cm
Weight	70 kg

ACCESSORIES	CODE
Axillary supports	1215030
Padded patient restraint	1215040
10 cm safety strap	1215050
Patient table	1215060

ACCESSORIES	CODE
Safety magnet	1215070
Safety double click	1215080
Swiss plug	1215090
UK 3-pin plug	1215091

TILTING FISISOTECH

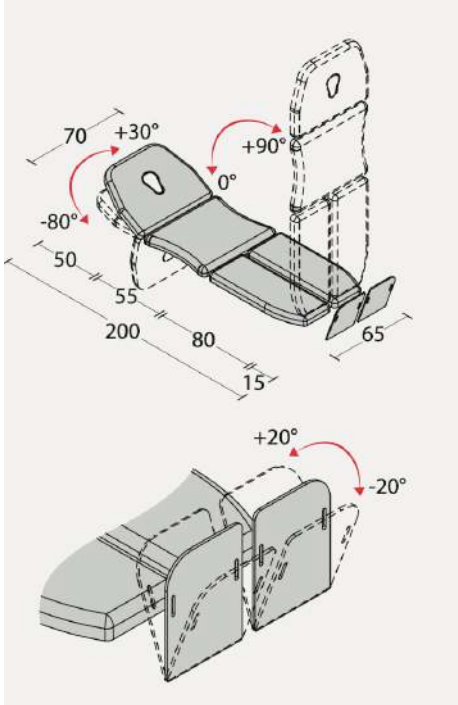

TECHNICAL SPECIFICATIONS	
Fixed height	50 cm
Upholstery dimensions	190 x 65 cm
Overall dimensions	200 x 70 cm
Max. working load	150 kg
Angle adjustment	electrical 0° +90°
Headrest adjustment	with gas spring +30° -80°
Complete with emergency lever for actuator unlocking Complete with four swivel castors, of which two locking	∅ 12,5 cm
Complete with safety straps	5
Complete with axillary supports	2
Independent footboards adjustment	manual +20° -20°
Breathing hole and bung	as standard
Padding and upholstery fire-resistance rating	1IM
Padding: density/thickness	30 (kg/m³) / 4 cm
Under bed clearance	70 kg
Weight	70 kg

ACCESSORIES	CODE
Padded patient restraint	1215040
10 cm safety strap	1215050
Patient table	1215060
Safety magnet	1215070

ACCESSORIES	CODE
Safety double click	1215080
Swiss plug	1215090
UK 3-pin plug	1215091

TILTING FISIOTECH

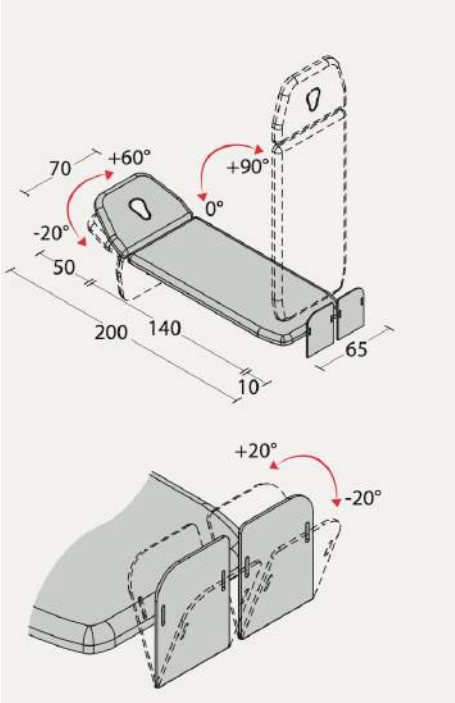

TECHNICAL SPECIFICATIONS	
Height adjustment	electrical 54-96 cm
Upholstery dimensions	190 x 65 cm
Overall dimensions	200 x 70 cm
Max. working load	150 kg
Angle adjustment	electrical 0° +90°
Headrest adjustment	with gas spring +60° -20°
Complete with emergency lever for actuator unlocking	
Complete with four swivel castors, of which two locking	Ø 10 cm
Complete with safety straps	3
Complete with patient table	
Independent footboards adjustment	manual +20° -20°
Breathing hole and bung	as standard
Padding and upholstery fire-resistance rating	1IM
Padding: density/thickness	30 (kg/m³) / 4 cm
Lateral offset	none
Under bed clearance	15 cm
Weight	70 kg

ACCESSORIES	CODE
Axillary supports	1215030
Padded patient restraint	1215040
10 cm safety strap	1215050
Safety double click	1215070

ACCESSORIES	CODE
Safety double click	1215080
Swiss plug	1215090
UK 3-pin plug	1215091

TILTING FISIOTECH

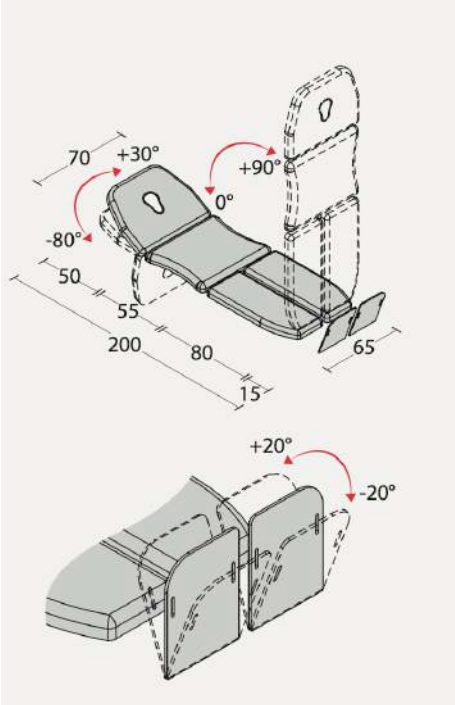

TECHNICAL SPECIFICATIONS	
Height adjustment	electrical 54-96 cm
Upholstery dimensions	190 x 65 cm
Overall dimensions	200 x 70 cm
Max. working load	150 kg
Angle adjustment	electrical 0°+90°
Headrest adjustment	with gas spring +30° -80°
Complete with emergency lever for actuator unlocking	
Complete with four swivel castors, of which two locking	∅ 10 cm
Complete with safety straps	5
Independent footboards adjustment	manual +20° -20°
Breathing hole and bung	as standard
Padding and upholstery fire-resistance rating	1IM
Padding: density/thickness	30 (kg/m³) / 4 cm
Lateral offset	none
Under bed clearance	15 cm
Weight	70 kg

ACCESSORIES	CODE
Axillary supports	1215030
Padded patient restraint	1215040
10 cm safety strap	1215050
Patient table	1215060

ACCESSORIES	CODE
Safety magnet	1215070
Safety double click	1215080
Swiss plug	1215090
UK 3-pin plug	1215091

POSTURAL FISIOTECH

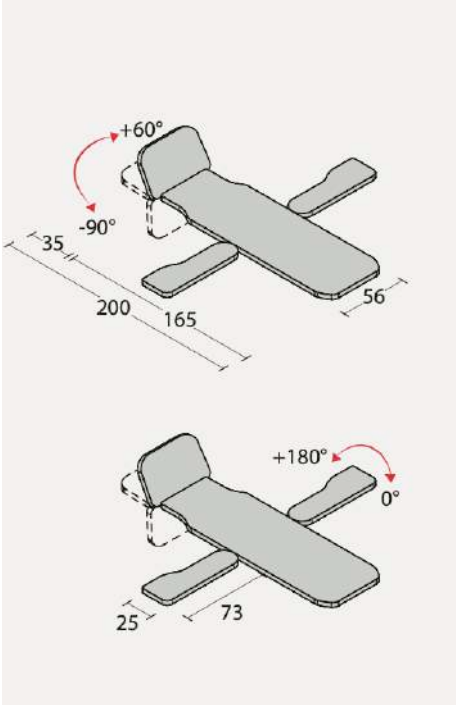

TECHNICAL SPECIFICATIONS	
Height adjustment	electrical or hydraulic 56-100 cm
Length	200 cm
Width	56 cm
Max. working load	200 kg
Sliding lateral armrests rotating by	180°
Footrest adjustment	with gas spring +60° -90°
Padding and upholstery fire-resistance rating	1IM
Padding: density/thickness	100 (kg/m³) / 1 cm
Lateral offset	none
Under bed clearance	12 cm
Weight	70 kg

ACCESSORIES	CODE
Height-adjustable pole + rope + ankle strap	1215010
Paper roll holder	1218010
Four castors	1218020
Double-ply paper roll	1210060

ACCESSORIES	CODE
Safety magnet	1217010
Safety double click	1217020
Swiss plug	1217030
UK 3-pin plug	1217031

POSTURAL FISIOTECH

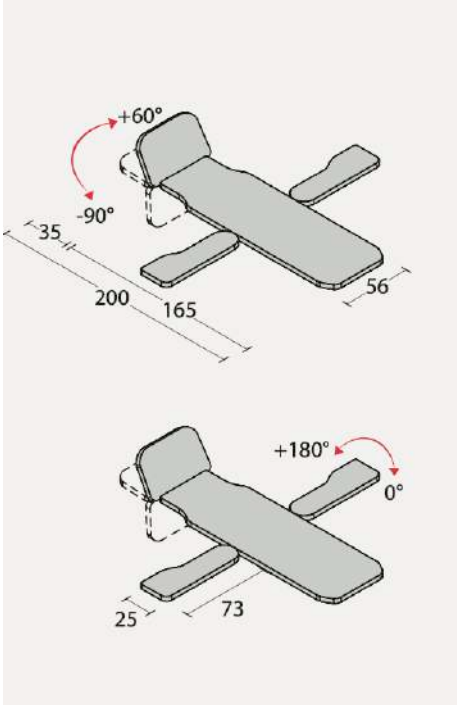

TECHNICAL SPECIFICATIONS	
Fixed height	74 cm
Length	200 cm
Width	56 cm
Max. working load	180 kg
Sliding lateral armrests rotating by	180°
Footrest adjustment	with gas spring +60° -90°
Padding and upholstery fire-resistance rating	1IM
Padding: density/thickness	100 (kg/m³) / 1 cm
Weight	60 kg

ACCESSORIES	CODE
Height-adjustable pole + rope + ankle strap	1215010
Paper roll holder	1218010

ACCESSORIES	CODE
Double-ply paper roll	1210060

POSTURAL FISIOTECH

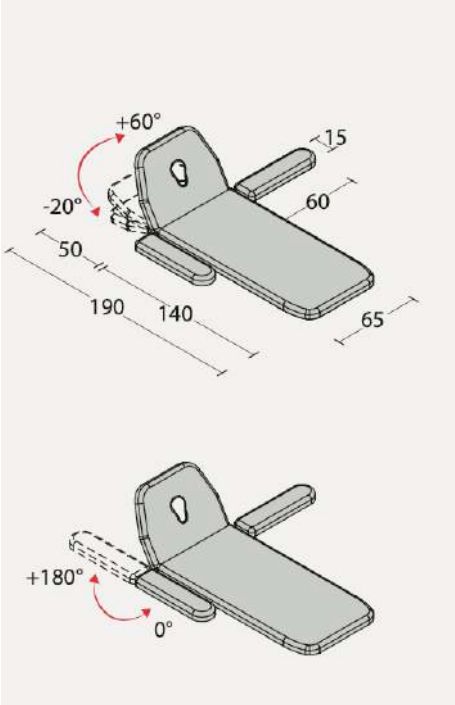

TECHNICAL SPECIFICATIONS	
Height adjustment	electrical or hydraulic 45-90 cm
Length	190 cm
Width	65 cm
Max. working load	200 kg
Headrest adjustment	with gas spring +60° -20°
Sliding lateral armrests rotating by	180°
Breathing hole and bung	as standard
Padding and upholstery fire-resistance rating	1IM
Padding: density/thickness	30 (kg/m³) / 4 cm
Lateral offset	17 cm
Weight	70 kg

ACCESSORIES	CODE
Height-adjustable pole + rope + ankle strap	1215010
Paper roll holder	1210010
Four castors	1211010
Double-ply paper roll	1210060

ACCESSORIES	CODE
Safety magnet	1217010
Safety double click	1217020
Swiss plug	1217030
UK 3-pin plug	1217031

POSTURAL FISIOTECH

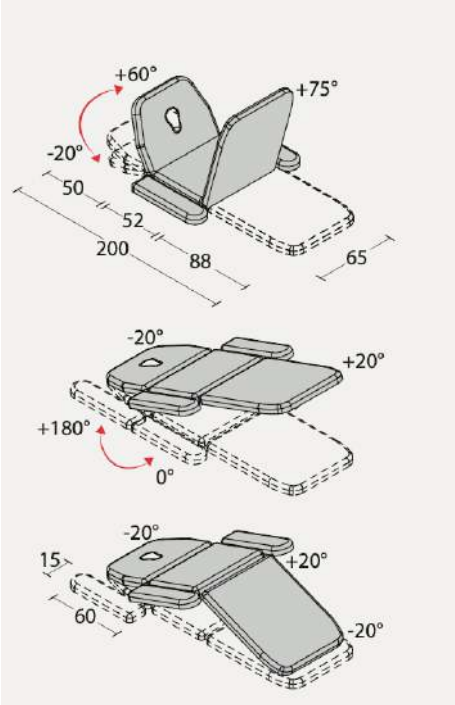

TECHNICAL SPECIFICATIONS	
Height adjustment	electrical or hydraulic 45-90 cm
Length	190 cm
Width	65 cm
Max. working load	200 kg
Headrest adjustment	with gas spring +60° -20°
Armrests adjustment	manual
Removable lateral armrests rotating by	180°
Middle section adjustment	with gas spring +20°
Footrest adjustment	with gas spring +75°
Trendelenburg position	+20°
Breathing hole and bung	as standard
Padding and upholstery fire-resistance rating	1IM
Padding: density/thickness	30 (kg/m³) / 4 cm
Lateral offset	17 cm
Weight	70 kg

ACCESSORIES	CODE
Paper roll holder	1210010
Four castors	1211010
Double-ply paper roll	1210060
Safety magnet	1217010

ACCESSORIES	CODE
Safety double click	1217020
Swiss plug	1217030
UK 3-pin plug	1217031

BED FISIOTECH

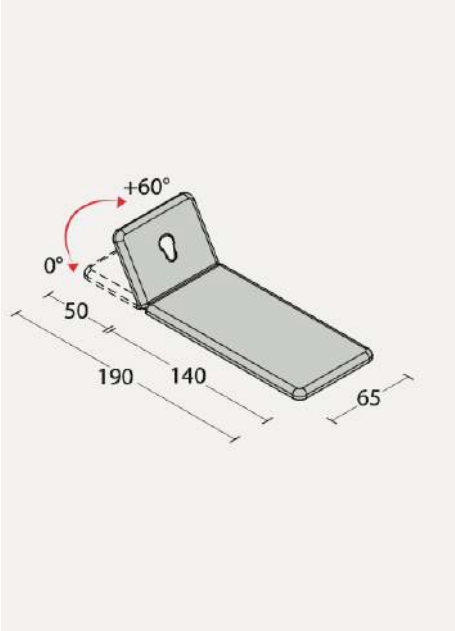

TECHNICAL SPECIFICATIONS	
Fixed height	78 cm
Length	190 cm
Width	65 cm
Max. working load	150 kg
Headrest adjustment	manual +60°
Breathing hole and bung	as standard
Padding and upholstery fire-resistance rating	1IM
Padding: density/thickness	30 (kg/m³) / 4 cm
Weight	50 kg

ACCESSORIES	CODE
Paper roll holder	1216010
Terry towel couch cover 65 cm	1210040

ACCESSORIES	CODE
Double-ply paper roll	1210060

BED FISIOTECH

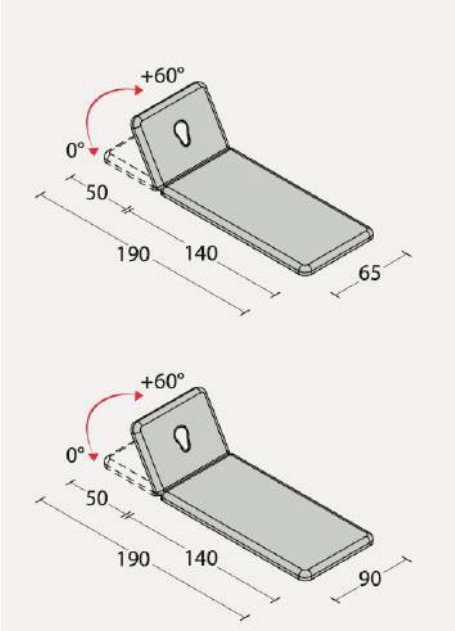

TECHNICAL SPECIFICATIONS	
Fixed height	50 - 78 cm
Length	190 cm
Width	65 / 90 cm
Max. working load	130 kg
Headrest adjustment	manual +60°
Breathing hole and bung	as standard
Padding and upholstery fire-resistance rating	1IM
Padding: density/thickness	30 (kg/m³) / 4 cm
Weight	50 kg

ACCESSORIES	CODE
Paper roll holder 65 cm	1216010
Paper roll holder 90 cm	1216020
Lower shelf 65 cm	1216040

ACCESSORIES	CODE
Lower shelf 90 cm	1216050
Terry towel couch cover 65 cm	1210040
Double-ply paper roll	1210060

BED FISIOTECH

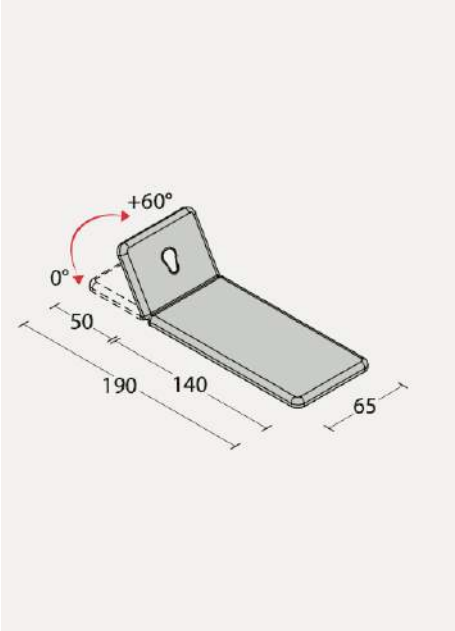

TECHNICAL SPECIFICATIONS	
Fixed height	78 cm
Length	190 cm
Width	65 cm
Max. working load	130 kg
Headrest adjustment	manual +60°
Tilting foldable legs	
Breathing hole and bung	as standard
Padding and upholstery fire-resistance rating	1IM
Padding: density/thickness	30 (kg/m³) / 4 cm
Weight	50 kg

ACCESSORIES	CODE
Paper roll holder	1216010
Terry towel couch cover 65 cm	1210040

ACCESSORIES	CODE
Double-ply paper roll	1210060

BED FISIOTECH

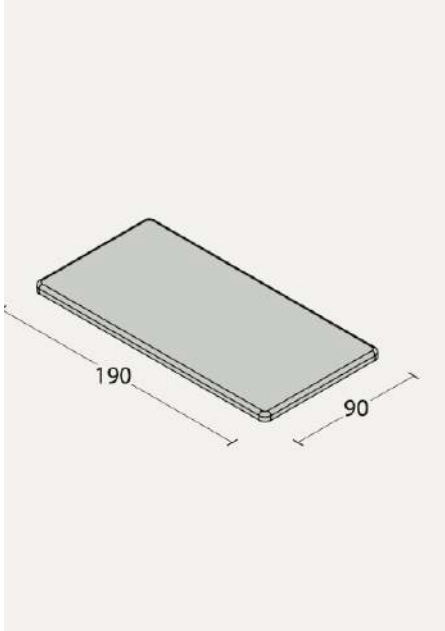

TECHNICAL SPECIFICATIONS	
Fixed height	50 - 78 cm
Length	190 cm
Width	90 cm
Max. working load	130 kg
Padding and upholstery fire-resistance rating	1IM
Padding: density/thickness	30 (kg/m³) / 4 cm
Weight	50 kg

ACCESSORIES	CODE
Paper roll holder	1216020
Lower shelf 90 cm	1216050

ACCESSORIES	CODE
Double-ply paper roll	1210060

BED FISIOTECH

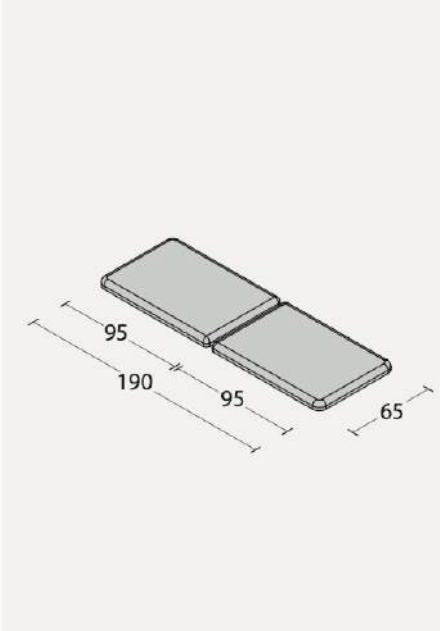

TECHNICAL SPECIFICATIONS	
Height	manual 60-75 cm
Length	218 cm
Width	65 cm
Dimensions closed	95 x 65 x 20 cm
Max. working load	150 kg
Headrest	removable
Armrest	removable
Padding and upholstery fire-resistance rating	1IM
Padding: density/thickness	30 (kg/m³) / 4 cm
Weight	17 kg

ACCESSORIES	CODE
HYDRA table carry case	1216070

BED FISIOTECH

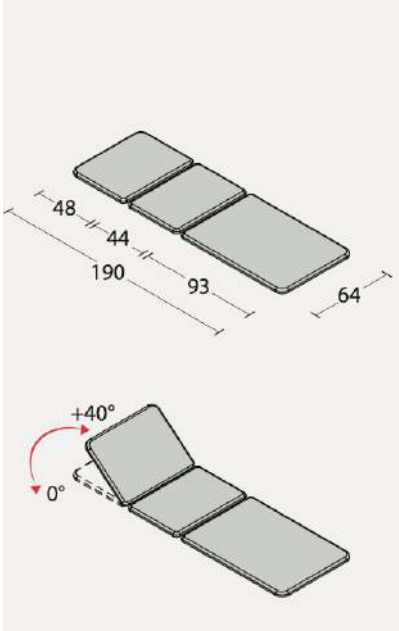

TECHNICAL SPECIFICATIONS	
Fixed height	72 cm
Length	187 cm
Width	64 cm
Dimensions closed	95 x 65 x 15 cm
Max. working load	95 kg
Headrest adjustment	manual +40°
Padding and upholstery fire-resistance rating	1IM
Padding: density/thickness	30 (kg/m³) / 2 cm
Weight	20 kg

ACCESSORIES	CODE
ANTERO table carry case	1216060

BED FISIOTECH

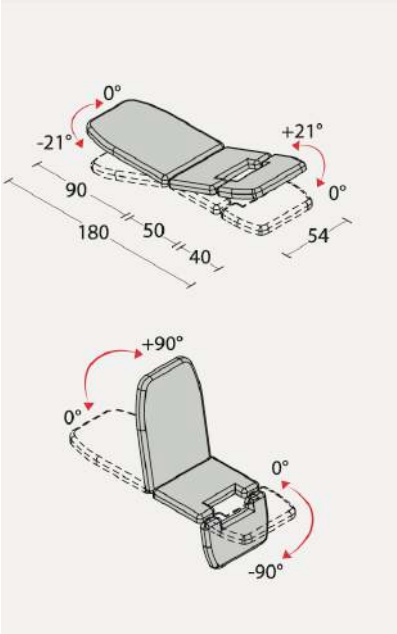

TECHNICAL SPECIFICATIONS	
Height adjustment	electrical 53-85 cm
Length	180 cm
Width	54 cm
Max. working load	180 kg
Backrest adjustment	electrical 0° +90°
Leg section adjustment	electrical 0° -90°
Trendelenburg position	0° +21°
Armrests	folding
Leg supports adjustment	manual in height and rotation
Four locking castors	∅ 10 cm
Stainless steel bowl	removable
Padding and upholstery fire-resistance rating	1IM
Padding: density/thickness	30 (kg/m³) / 6 cm
Weight	72 kg

ACCESSORIES	CODE
Paper roll holder	1219020
Removable padded headrest	1219030
Double-ply paper roll	1210060
Safety magnet	1219040

ACCESSORIES	CODE
Safety double click	1219050
Swiss plug	1219060
UK 3-pin plug	1219061

BED FISIOTECH

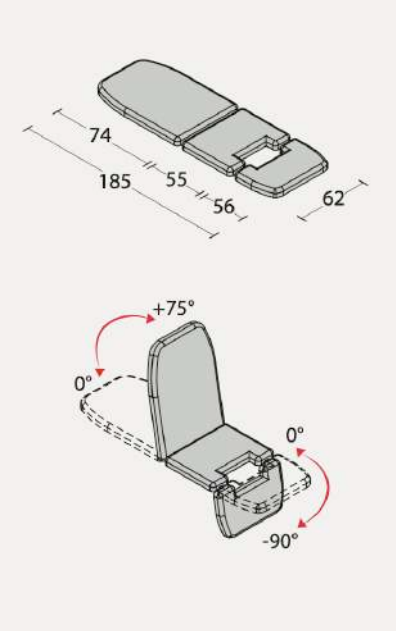

TECHNICAL SPECIFICATIONS	
Fixed height	76 cm
Length	185 cm
Width	62 cm
Max. working load	135 kg
Backrest adjustment	manual 0° +75°
Seat section	fixed
Footrest adjustment	manual 0° -90°
Leg supports adjustment	height and rotation
Stainless steel bowl	removable
Padding and upholstery fire-resistance rating	1IM
Padding: density/thickness	30 (kg/m³) / 5 cm
Weight	50 kg

ACCESSORIES	CODE
Paper roll holder	1219010

BED FISIOTECH

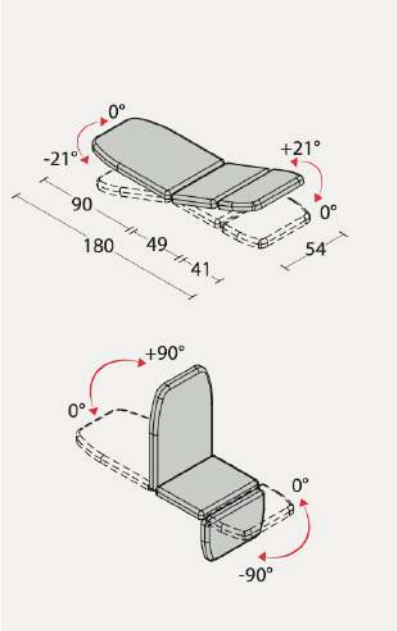

TECHNICAL SPECIFICATIONS	
Height adjustment	electrical 53-85 cm
Length	180 cm
Width	54 cm
Max. working load	180 kg
Backrest adjustment	electrical 0° +90°
Leg section adjustment	electrical 0° -90°
Trendelenburg position	0° +21°
Armrests	folding
Four locking castors	∅ 10 cm
Padding and upholstery fire-resistance rating	1IM
Padding: density/thickness	30 (kg/m³) / 6 cm
Weight	72 kg

ACCESSORIES	CODE
Paper roll holder	1219020
Removable headrest	1219030
Double-ply paper roll	1210060
Safety magnet	1220010

ACCESSORIES	CODE
Safety double click	1220020
Swiss plug	1220030
UK 3-pin plug	1220031

BED ACCESSORY FISIOTECH

FOOT PEDAL
Standard foot pedal for height adjustment.

ALL AROUND FOOT BAR SWITCH
The height of the couch is adjusted by simply swinging the bar placed all around the base of the couch.

ALUMINIUM ALL AROUND FOOT BAR SWITCH
The height of the couch is adjusted by simply pressing the bar placed all around the base of the couch.

HYDRAULIC CONTROL
The height of the couch is adjusted by simply pressing the hydraulic piston pedal.

PAPER ROLL HOLDER – Code 1218010
Metal structure to be placed under the final section of the couch.

CASTORS – Code 1218020
Four retractable castors to be used only to move the couch ∅ 7,5 cm.

SAFETY MAGNET – Code 1218030
Removing the magnet all electrical regulation functions are prevented.
This avoids any accidental activation of the actuators.
SAFETY DOUBLE CLICK WITH MAGNET – Code 1218040
A software that allows the movement of the actuators only through a double input of the control. This avoids any accidental activation of the actuators.
NOT AVAILABLE ON MOVEMENT WITH ALUMINIUM ALL-AROUND FOOT BAR SWITCH.

SWISS PLUG – Code 1218050 UK 3-PIN PLUG – Code 1215051

BED ACCESSORY FISIOTECH

FOOT PEDAL
Standard foot pedal for height adjustment.

ALL AROUND FOOT BAR SWITCH
The height of the couch is adjusted by simply swinging the bar placed all around the base of the couch.

HYDRAULIC CONTROL
The height of the couch is adjusted by simply pressing the hydraulic piston pedal.

PAPER ROLL HOLDER – Code 1210010
PAPER ROLL HOLDER – Code 1218010 For MONTELEONE couch. Metal structure to be placed under the final section of the couch.

CASTORS – Code 1211010
Four retractable castors to be used only to move the couch ∅ 6 cm.

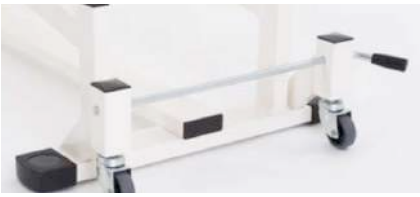

COLLAPSIBLE COT SIDES – Code 1210030
Cot sides ensuring the patient's safety while lying on the couch. Easy to use, with a simple manual mechanism.

SAFETY MAGNET – Code 1211020
Removing the magnet all electrical regulation functions are prevented. This avoids any accidental activation of the actuators.
SAFETY DOUBLE CLICK WITH MAGNET – Code 1211030
A software that allows the movement of the actuators only through a double input of the control. This avoids any accidental activation of the actuators.

SWISS PLUG – Code 1211040 UK 3-PIN PLUG – Code 1211041

BED ACCESSORY FISIOTECH

FOOT PEDAL
Standard foot pedal for height adjustment.

ALL AROUND FOOT BAR SWITCH
The height of the couch is adjusted by simply swinging the bar placed all around the base of the couch.

HYDRAULIC CONTROL
The height of the couch is adjusted by simply pressing the hydraulic piston pedal.

PAPER ROLL HOLDER – Code 1210010
Metal structure to be placed under the final section of the couch.

CASTORS – Code 1212010
Four retractable castors to be used only to move the couch ∅ 7,5 cm.

COLLAPSIBLE COT SIDES – Code 1210030
Cot sides ensuring the patient's safety while lying on the couch. Easy to use, with a simple manual mechanism.

SAFETY MAGNET – Code 1212020
Removing the magnet all electrical regulation functions are prevented. This avoids any accidental activation of the actuators.
SAFETY DOUBLE CLICK WITH MAGNET – Code 1212030
A software that allows the movement of the actuators only through a double input of the control. This avoids any accidental activation of the actuators.

SWISS PLUG – Code 1212040 UK 3-PIN PLUG – Code 1212041

BED ACCESSORY FISIOTECH

FOOT PEDAL
Standard foot pedal for height adjustment.
VARIATIONS

CASTORS BOBATH – Code 1213010
Four retractable castors to be used only to move the couch Ø 7,5 cm. For BOBATH S couches

CASTORS TITAN
Four retractable castors to be used only to move the couch Ø 7,5 cm. For TITAN couches Code 1213020
For TITAN 1L couches Code 1213021

COLLAPSIBLE COT SIDES – Code 1210030
Cot sides ensuring the patient's safety while lying on the couch. Easy to use, with a simple manual mechanism.

DOUBLE FOOT PEDAL – Code 1213030
The height of the couch is adjusted from both sides of the couch thanks to this accessory.

SAFETY MAGNET – Code 1213040
Removing the magnet all electrical regulation functions are prevented. This avoids any accidental activation of the actuators.
SAFETY DOUBLE CLICK WITH MAGNET – Code 1213050
A software that allows the movement of the actuators only through a double input of the control. This avoids any accidental activation of the actuators.

SWISS PLUG – Code 1213060 UK
3-PIN PLUG – Code 1213061

TILT BED ACCESSORY FISIOTECH

HAND CONTROL
Hand control for tilt adjustment and for height adjustment in height-adjustable tilt tables.

AXILLARY SUPPORTS – Code 1215030
The axillary supports can be adjusted in height, width and depth.

PATIENT TABLE – Code 1215060
The patient table can be used when the tilt table is in a supine static position. The patient table is designed so that the patient can lay its forearms on it.
Its height and depth can be manually adjusted.

PADDED PATIENT RESTRAINT – Code 1215040
Padded band designed to provide higher and more comfortable support to the patient.

SAFETY STRAP HEIGHT 10 cm – Code 1215050
Safety strap for an easy support of the patient. Height 10 cm.

SAFETY MAGNET – Code 1215070
Removing the magnet all electrical regulation functions are prevented. This avoids any accidental activation of the actuators.
SAFETY DOUBLE CLICK WITH MAGNET – Code 1215080
A software that allows the movement of the actuators only through a double input of the control. This avoids any accidental activation of the actuators.

SWISS PLUG – Code 1215090 UK
3-PIN PLUG – Code 1215091

POSTURAL ACCESSORY BED FISIOTECH

FOOT PEDAL
Standard foot pedal for height adjustment.

ALL AROUND FOOT BAR SWITCH
The height of the couch is adjusted by simply swinging the bar placed all around the base of the couch.

ALUMINIUM ALL AROUND FOOT BAR SWITCH
Available only on POSEIDONE couch.
The height of the couch is adjusted by simply pressing the bar placed all around the base of the couch.

HYDRAULIC CONTROL
The height of the couch is adjusted by simply pressing the hydraulic piston pedal.

ACCESSORY FISIOTECH

PAPER ROLL HOLDER – Code 1218010 For POSEIDONE couch. PAPER ROLL HOLDER – Code 1210010 For IRIS and NIKE couch. Metal structure to be placed under the final section of the couch.

CASTORS – Code 1218020 For POSEIDONE couch ∅ 7,5 cm.

CASTORS – Code 1211010 For IRIS and NIKE couch ∅ 6 cm. Four retractable castors to be used only to move the couch.

ADJUSTABLE POLE – Code 1215010
Removable pole, adjustable in height and equipped with rope and ankle strap. Not suitable for NIKE couch.

SAFETY MAGNET – Code 1217010
Removing the magnet all electrical regulation functions are prevented. This avoids any accidental activation of the actuators.
SAFETY DOUBLE CLICK WITH MAGNET – Code 1217020
A software that allows the movement of the actuators only through a double input of the control. This avoids any accidental activation of the actuators.

SWISS PLUG – Code 1217030 UK 3-PIN PLUG – Code 1217031

PAPER HOLD BED FISIOTECH

PAPER ROLL HOLDER - Code 1216010 For 65 cm wide fixed-height couches.

PAPER ROLL HOLDER - Code 1216020 For 90 cm wide fixed-height couches. Metal structure to be placed under the final section of the couch.

LOWER SHELF - Code 1216040 For 65 cm wide fixed-height couches. LOWER SHELF - Code 1216050 For 90 cm wide fixed-height couches. Support surface for couches .

ANTERO CARRY CASE - Code 1216060
ANTERO couch carry case.

HYDRA CARRY CASE - Code 1216070
HYDRA couch carry case.

GYN BED ACCESSORY FISIOTECH

HAND CONTROL
Hand control for sections and height adjustment.

PAPER ROLL HOLDER COUCH ESTIA – Code 1219010
Metal structure to be placed under the backrest of the couch.

PAPER ROLL HOLDER ERA ARMCHAIR – Code 1219020
Metal structure to be placed under the backrest of the couch.

HEADREST ERA ARMCHAIR – Cod. 1219030
Removable padded headrest to give the patient higher comfort.

SAFETY MAGNET – Code 1219040
Removing the magnet all electrical regulation functions are prevented. This avoids any accidental activation of the actuators.

SAFETY DOUBLE CLICK WITH MAGNET – Code 1219050
A software that allows the movement of the actuators only through a double input of the control. This avoids any accidental activation of the actuators.

SWISS PLUG – Code 1219060 UK 3-PIN PLUG – Code 1219061

BED ACCESSORY FISIOTECH

HAND CONTROL
Hand control for sections and height adjustment.

PAPER ROLL HOLDER DEMETRA ARMCHAIR - Code 1219020
Metal structure to be placed under the backrest of the couch.

HEADREST DEMETRA ARMCHAIR - Cod. 1219030
Removable padded headrest to give the patient higher comfort.

SAFETY MAGNET - Code 1220010
Removing the magnet all electrical regulation functions are prevented. This avoids any accidental activation of the actuators.

SAFETY DOUBLE CLICK WITH MAGNET - Code 1220020
A software that allows the movement of the actuators only through a double input of the control. This avoids any accidental activation of the actuators.

SWISS PLUG - Code 1220030
UK 3-PIN PLUG - Code 1220031

NEW BED FISIOTECH

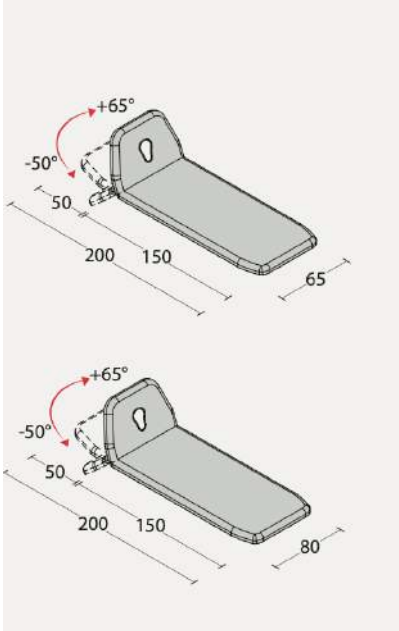

TECHNICAL SPECIFICATIONS	
Height adjustment	electrical or hydraulic 47-92 cm
Length	200 cm
Width	65 / 80 cm
Max. working load	200 kg
Headrest adjustment	with gas spring +65° -50°
Breathing hole and bung	as standard
Padding and upholstery fire-resistance rating	1IM
Padding: density/thickness	30 (kg/m³) / 4 cm
Lateral offset	24 cm
Under bed clearance (model with all round bar excluded)	12 cm
Weight	70 kg

ACCESSORIES	CODE
Paper roll holder	1210010
Four castors	1218020
Collapsible cotsides	1221070
Safety magnet	1221030

ACCESSORIES	CODE
Safety double click	1221040
Swiss plug	1221050
UK 3-pin plug	1221060
Double-ply paper roll	1210060

ZARYA BED

«Kinezo Expert» massage tables are ideal for various applications in medical and rehabilitation centres, spas, hospitals, massage rooms and beauty salons.
Table height can be easily adjusted with an electric drive. The frame height switch ensures smooth raising and lowering of the table on either side with an easy foot movement without distraction from the procedure.

- Regardless of the table configuration, the highest product quality and its characteristics remain unchanged: :
- LINAK electric drive for smooth height adjustment;
- STABILUS gas struts for setting the inclination angle of individual sections;
- frame switch for height adjustment on all sides;
- face hole in the upper section;
- wheels with a one-touch lift and lock option;
- adjustable legs to compensate for the uneven floor;
- wear-proof upholstery is made from certified materials.

In addition, you can order a lockable wheelbase.

✪ APPLICATIONS:

- massage,
- manual therapy,
- physiotherapy,
- kinesitherapy.

BED B ZARYA

«Kinezo Expert» tables are equipped with an electric drive and a 120 to 160 cm wide couch with a load capacity of up to 180 kg. Since different methods and operating conditions require purely individual parameters of kinesitherapy tables, we offer affordable basic equipment and a large number of additional options. Lockable wheels ensure safe and secure lock of the table for continuous operation. When necessary, it can be moved quickly and easily to the right place. The frame height switch ensures smooth one-touch table raising and lowering on both sides without distraction from the procedure.

THE STANDARD CONFIGURATION OF KINESITHERAPY TABLES INCLUDES:

- two different electric control devices: frame or remote control,
- gas struts to change the angle of the individual sections,
- adjustable legs to compensate for uneven floor.

In addition, you can order a lockable wheelbase.

✪ APPLICATIONS:

- Bobath and Vojta therapy,
- physiotherapy,
- kinesitherapy,
- manual therapy,
- massage.

PART BOBATH TABLE-FIZYOMED

✪ FEATURES

- Two pieces
- Adjustable height with electrical motor
- Hand Controller
- Head section has Manuel height adjustable.
- Optional, wheels can be installed on request

TEKNIK ÖZELLIKLER / TECHNICAL SPECIFICATION	
Güç Girişi / Power Supply	220-240 V 50/60 Hz
Motor / Motor	1
Boyu / Length	200 cm (± 10 cm)
Eni / Width	120 cm (± 10 cm)
Elektrikli Yükseklik / Adjustable Heigth	55 - 95 cm (± 10 cm)
Hasta Taşıma Kapasitesi / Patient Carriage Capacity	180 kg
Yaklaşık Ağırlığı / Approx. Weighth	25 kg
Sınıf Beyanı / Class Declaration	class I
Sertifikalar / Certificates	EN ISO 13485 : 2016 CE (Declaration Of Conformity)

TILTING TABLE ZARYA

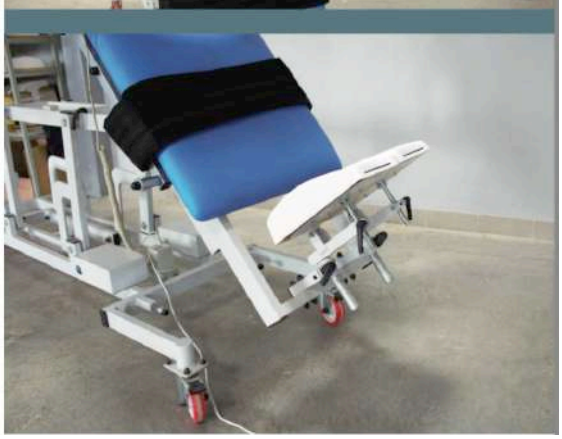

«Kinezo Expert» verticalizing tables are used in rehab therapy for patients who cannot stand up without help. They are used to move the patient to an upright position, prepare him/her for standing and walking, and prevent negative consequences of a prolonged lying position. Our equipment is used for rehabilitation in intensive care units. Besides, it is suitable for home therapy.

✪ APPLICATIONS:

- stroke,
- spinal cord injuries,
- brain injuries,
- recovery after neurological surgery.

✪ STANDARD CONFIGURATION INCLUDES:

- electric drive for smooth table adjustment,
- gas struts for setting the inclination angle of the head section,
- adjustable foot supports with anti-slip coating,
- soft chest fixation,
- soft leg fixation,
- table.

The table can be equipped with a face hole in the head section upon the customer's request, in order to use it as a massage table or kinesitherapy table.

MULTIPLE BODY FUNCTIONAL TABLE HAOBRO

HB703	HB706	HB709
Three-fold three-segment	Four-fold six-segment	Four-fold nine-segment

FEATURES

- Set different positions according to the functional characteristics of the treatment bed and the treatment needs;
- The height and angle of the bed surface can be adjusted as required, so that the therapist can perform manual massage and minimally invasive surgical treatment with acupotomy in different positions of the patient;
- High-quality electrodes, stable operation, in line with global electromechanical quality and safety standards (ISO. CE. and UL);
- The bed surface is made of environment-friendly, moisture-proof, anti-bacterial, and fireproof materials for medical use;
- It is equipped with an electric foot switch for electric lifting and a manual switch button for adjusting the angle;
- Electric control treatment position;
- There are breathing holes for patients;
- With unique foot-control bed body fixing and lifting device;
- High-quality materials, which are stable, firm, and durable

TILTING TABLE HAOBRO

HB700	HB701
Rising inclination angle: 0°~ 85°	Rising inclination angle: 0° ~ 85°
Pedal dorsiflexion: 0°~25°; Plantar flexion: 0°~30°	Height range of armrest board in upright posi-tion: 80~150cm
Pedal inversion: 0°~40°; valgus: 0°~30°	The vertical distance between the armrest board and the bed board is 0~20cm
Height range of armrest board in upright position: 80-150cm	Pedal dorsiflexion: 0°~25°; Plantar flexion: 0°-30°
Vertical lifting	Pedal inversion: 0"~40"; valgus: 0°~30°
Motor thrust: 3000N	Lifted height range of bed surface: 43~80cm
	Vertical lifting, horizontal lifting

✪ FEATURES

1. Can be used as an ordinary lifting treatment bed
2. Two motors can be controlled by a hand-held switch to adjust the inclination and height of the bed board respectively
3. Triple protection of motor and supporting gas spring on both sides
4. High-quality linear actuator, stable quality and low noise
5. The foot pedal can correct the patient's foot varus & valgus foot, and foot drop

PART TREATMENT AND EXAMINATION TABLE-FIZYOMED

✪ FEATURES

- 10 Part treatment and examination table.
- Electrical motor to adjust height
- Hand controller for easy operation
- An opening in the head section for patient comfort
- Head section of the unit can be adjusted between downwards 32° – and upwards 45°
- On requested the head rest opening can be closed.
- Adjustable feet section height
- All metal and steel parts have been painted with electrostatic paint to avoid rust.
- High density matress
- Easy clean winylex leather covering

TEKNIK ÖZELLIKLER / TECHNICAL SPECIFICATION	
Güç Girişi / Power Supply	220-240 V 50/60 Hz
Motor / Motor	2
Güç Tüketimi / Power Consumption	130 VA
Boyu / Length	200 cm (± 10 cm)
Eni / Width	70 cm (± 10 cm)
Elektrikli Yükseklik / Adjustable Heigth	63 - 102 cm (± 10 cm)
Hasta Taşıma Kapasitesi / Patient Carriage Capacity	210 kg
Yaklaşık Ağırlığı / Approx. Weigth	90 - 100 kg
Sınıf Beyanı / Class Declaration	class I
Sertifikalar / Certificates	EN ISO 13485 : 2016
	CE (Declaration Of Conformity)
	TPE Tescil no: 2012 03166

PART MECHANICAL TRACTION TABLE-FIZYOMED

✪ FEATURES

- 3 Part mechanical traction table
- Height adjustable with electrical motor
- Hand Controller for easy use
- Can be used in lumber or cervical
- Used as lumber, the patient gets the real traction power without slipping during the pulling process
- The traction pull is also possible when the patient is in a lying or sitting position on the table.
- Electrostatic metal and steel accessories
- High Density Matress

TEKNIK ÖZELLIKLER / TECHNICAL SPECIFICATION	
Güç Girişi / Power Supply	220-240 V 50/60 Hz
Motor / Motor	1
Güç tüketimi / Power Consumption	130 VA
Boyu (Cihazın Takıldığı Aparat Dahil) Length (Includes The Apparatus For The Device)	258 cm
Eni / Width	60 cm
Yükseklik / Heigth	50-95 cm
Hasta Taşıma Kapasitesi /Patient Carriage Capacity	210 kg
Yaklaşık ağırlığı / Approx. Weighth	60-70 kg
Sınıf Beyanı / Class Declaration	Class I
Sertifikalar / Certificates	EN ISO 13485 : 2016 CE (Declaration Of Conformity) TPE Tescil no: 2008 02293
Standart Aksesuarlar/ Standard Accesories	(1 Takım / 1 Set) Servikal ve Lomber Kose / Servical and Lumbar Corset (1 Adet / 1 pcs.) Servikal Korse Askı Demiri / Servical Corset Hanger (1 Adet / 1 pcs.) Fleksiyon Sehpası / Flexion Stand (1 çift / 1 pair) Koltukaltı Aparatı / Axilla Apparatus (1 adet/ 1 pcs.) Servikal Çekim Aparatı (L Aparat) Servical Traction Apparatus (L Apparatus) (2 adet / 2pcs.) Ayarlamalı Makara/ Adjustable Pulley

PART TREATMENT AND EXAMINATION TABLE-FIZYOMED

✪ FEATURES

- 9 Part treatment and examination table.
- Electrical motor to adjust height
- Hand controller for easy operation
- An opening in the head section for patient comfort
- Head section of the unit can be adjusted between downwards 32° – and upwards 45°
- On requested the head rest opening can be closed.
- Adjustable feet section height
- All metal and steel parts have been painted with electrostatic paint to avoid rust.
- High density matress
- Easy clean winylex leather covering

TEKNIK ÖZELLIKLER / TECHNICAL SPECIFICATION	
Güç Girişi / Power Supply	220-240 V 50/60 Hz
Motor / Motor	2
Güç Tüketimi / Power Consumption	130 VA
Boyu / Length	200 cm (± 10 cm)
Eni / Width	70 cm (± 10 cm)
Elektrikli Yükseklik / Adjustable Heigth	63-102 cm (± 10 cm)
Hasta Taşıma Kapasitesi / Patient Carriage Capacity	210 kg
Yaklaşık Ağırlığı / Approx. Weigth	90-100 kg
Sınıf Beyanı / Class Declaration	class I
Sertifikalar / Certificates	EN ISO 13485 : 2016
	CE (Declaration Of Conformity)
	TPE Tescil no: 2012 03166

PART TREATMENT AND EXAMINATION TABLE-FIZYOMED

✪ FEATURES

- 4 Part treatment and examination table.
- Electrical motor to adjust height
- Hand controller for easy operation
- An opening in the head section for patient comfort
- Head section of the unit can be adjusted between 0° – 45°
- On requested the head rest opening can be closed.
- The mid section height of the table can be adjusted between 0-25cm
- All metal and steel parts have been painted with electrostatic paint to avoid rust.
- High density matress
- Easy clean winylex leather covering

TEKNIK ÖZELLIKLER / TECHNICAL SPECIFICATION	
Güç Girişi / Power Supply	220-240 V 50/60 Hz
Motor / Motor	1
Güç Tüketimi / Power Consumption	130 VA
Boyu / Length	200 cm (± 10 cm)
Eni / Width	70 cm (± 10 cm)
Elektrikli Yükseklik / Adjustable Height	63 - 102 cm (± 10 cm)
Hasta Taşıma Kapasitesi / Patient Carriage Capacity	210 kg
Yaklaşık Ağırlığı / Approx. Weight	60-75 kg
Sınıf Beyanı / Class Declaration	class I
Sertifikalar / Certificates	EN ISO 13485 : 2016
	CE (Declaration Of Conformity)
	TPE Tescil no: 2012 03166

PART TREATMENT AND EXAMINATION TABLE-FIZYOMED

✪ FEATURES

- 6 Part treatment and examination table.
- Electrical motor to adjust height
- Hand controller for easy operation
- An opening in the head section for patient comfort
- Head section of the unit can be adjusted between downwards 32° – and upwards 45°
- On requested the head rest opening can be closed.
- Adjustable feet section height
- All metal and steel parts have been painted with electrostatic paint to avoid rust.
- High density matress
- Easy clean winylex leather covering

TEKNIK ÖZELLIKLER / TECHNICAL SPECIFICATION	
Güç Girişi / Power Supply	220-240 V 50/60 Hz
Motor / Motor	1
Güç Tüketimi / Power Consumption	130 VA
Boyu / Length	195 cm (± 10 cm)
Eni / Width	70 cm (± 10 cm)
Elektrikli Yükseklik / Adjustable Height	52 - 96 cm (± 10 cm)
Hasta Taşıma Kapasitesi / Patient Carriage Capacity	210 kg
Yaklaşık Ağırlığı / Approx. Weight	60-75 kg
Sınıf Beyanı / Class Declaration	class I
Sertifikalar / Certificates	EN ISO 13485 : 2016
	CE (Declaration Of Conformity)
	TPE Tescil no: 2012 03166

MULTI-PURPOSE TREATMENT TABLE-FIZYOMED

✪ FEATURES

- Used Manipulation and Multi-Purpose to the Physiotherapy, table and chair
- Height adjustable with electrical motor assisted
- Hand controller for easy use
- An opening in the head section for patient comfort
- On requested the head rest opening can be closed Possibility act independently in all parts
- All metal and steel parts have been painted with electrostatic paint to avoid rust.
- 4 wheels the 2 lockable
- High densite matress
- Easy clean winylex leather covering

TEKNIK ÖZELLIKLER / TECHNICAL SPECIFICATION	
Güç Girişi / Power Supply	220-240 V 50/60 Hz
Motor / Motor	1
Boyu / Length	175 cm (± 10 cm)
Eni / Width	56 cm (± 10 cm)
Elektrikli Yükseklik / Adjustable Heigth	60-100 cm (± 10 cm)
Hasta Taşıma Kapasitesi / Patient Carriage Capacity	180 kg
Yaklaşık Ağırlığı / Approx. Weigth	25 kg
Sınıf Beyanı / Class Declaration	class I
Sertifikalar / Certificates	EN ISO 13485 : 2016
	CE (Declaration Of Conformity)

QUADRICIPES BENCH-FIZYOMED

Thanks to its anatomical design the FIZYOBENCH 1000 provides the muscles to work in the most convenient position so that the moving and working capacities are increased.
The chrome covered single parallel bar is regulated in variable sizes in order to determine the weights position and regulate the cylinders position. The disk allows the patient the desired movement in an axial. Therefore the patient cannot go beyond the set angle.
The back seat rest can be adjusted accordingly to the patient's height. By adjusting the seat it is possible for the patient to work the muscles group which is located back of the knees.
Optional: a second arm can be attached to the stretcher on request.

TEKNIK ÖZELLIKLER / TECHNICAL SPECIFICATION	
Boyu / Length	130 cm (± 10 cm)
Eni / Width	70 cm (± 10 cm)
Yükseklik / Heigth	75 cm (± 10 cm)
Hasta Taşıma Kapasitesi / Patient Carriage Capacity	210 kg
Yaklaşık Ağırlığı / Approx. Weighh	60 - 75 kg
Sınıf Beyanı / Class Declaration	class I
Sertifikalar / Certificates	EN ISO 13485 : 2016
	TPE Tescil no: 2008 02293
	CE (Declaration Of Conformity)

SINGLE PIECE BOBATH TABLE-FIZYOMED

✪ FEATURES

- Single piece
- Hand Controller
- Electrical height adjustment
- Optional, wheels can be installed on request

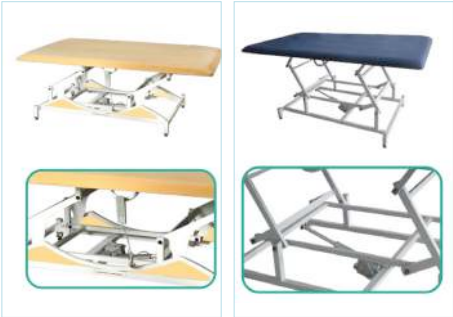

TEKNIK ÖZELLIKLER / TECHNICAL SPECIFICATION	
Güç Girişi / Power Supply	220-240 V 50/60 Hz
Motor / Motor	1
Boyu / Length	200 cm (± 10 cm)
Eni / Width	120 cm (± 10 cm)
Elektrikli Yükseklik / Adjustable Heigth	55 - 95 cm (± 10 cm)
Hasta Taşıma Kapasitesi / Patient Carriage Capacity	180 kg
Yaklaşık Ağırlığı / Approx. Weigth	25 kg
Sınıf Beyanı / Class Declaration	class I
Sertifikalar / Certificates	EN ISO 13485 : 2016
	CE (Declaration Of Conformity)

TILT TABLE-FIZYOMED

✪ FEATURES

- One piece
- Electrical motor, angle adjustment Hand controller
- Hand Controller for easy use
- Foot support
- Patient belts
- Electrostatic paint on all metal and steel parts
- High density matress
- Unit with angle indicator
- Easy clean, durable winylex leather
- Lockable wheels

TEKNIK ÖZELLIKLER / TECHNICAL SPECIFICATION	
Güç Girişi / Power Supply	220-240 V 50/60 Hz
Açısı / Angle	0-90°
Motor / Motor	1
Güç tüketimi / Power Consumption	130 VA
Boyu / Length	183 cm (± 10 cm)
Eni / Width	60 cm (± 10 cm)
Yükseklik / Heigth	76 cm (± 10 cm)
Hasta Taşıma Kapasitesi / Patient Carriage Capacity	210 kg
Yaklaşık Ağırlığı / Approx. Weight	50 kg
Sınıf Beyanı / Class Declaration	class I
Sertifikalar / Certificates	EN ISO 13485 : 2016
	CE (Declaration Of Conformity)
	TPE Tescil no: 2008 02293

TRACTION TABLE-FIZYOMED

FEATURES

- 3 Part mechanical traction table
- Can be used in lumber or cervical
- Used as lumber, the patient gets the real traction powerwithout slipping during the pulling process
- The traction pull is also possible when the patient is in a lying or sitting position on the table.
- Electrostatic metal and steel accessories
- High Density Matress

TEKNIK ÖZELLIKLER / TECHNICAL SPECIFICATION	
Boyu (Cihaz Dahil) / Height (Includes Device)	258 cm
Eni /Width	60 cm
Yükseklik / Heigth	70 cm
Hasta Taşıma Kapasitesi /Patient Carriage Capacity	210 kg
Yaklaşık Ağırlığı / Approx. Weight	45-55 kg o
Sınıf Beyanı / Class Declaration	Class I
Sertifikalar / Certificates	EN ISO 13485 : 2016
	CE (Declaration Of Conformity)
	TPE Tescil no: 2012 03166
Standart Aksesuarlar/ Standard Accesories	(1 takım / 1 set) servikal ve lomber korse / servical and lumbar corset
	(1 adet / 1 pcs.) servikal korse askı demiri / servical corset hanger
	(1 adet / 1 pcs.) fleksiyon sehpası / flexion stand
	(1 çift / 1 pair) koltukaltı aparatı / axilla apparatus
	(1 adet / 1 pcs.) servikal çekim aparatı (L Aparat) / servical traction Apparatus (L Apparatus)
	(3 adet / 3pcs.) Ayarlamalı Makara/ Adjustable Pulley

TREATMENT AND EXAMINATION TABLE-FIZYOMED

FEATURES

- Treatment and examination table made up of 2 parts.
- Head section of the unit can be adjusted between 0° – 45°
- An opening in the head section for patient comfort
- Paper towel apparatus
- High density matress
- All metal and steel parts have been painted with anti static paint to avoid rust.
- Vinylex leather matress for easy cleaning.

TEKNIK ÖZELLIKLER / TECHNICAL SPECIFICATION	
Boyu / Length	180 cm (± 10 cm)
Eni / Width	65 cm (± 10 cm)
Yükseklik / Heigth	75 cm (± 10 cm)
Hasta Taşıma Kapasitesi / Patient Carriage Capacity	210 kg
Yaklaşık Ağırlığı / Approx. Weight	30 kg
Sınıf Beyanı / Class Declaration	Class I
Sertifikalar / Certificates	EN ISO 13485 : 2016
	CE (Declaration Of Conformity)

PART TREATMENTA AND EXAMINATION TABLE-FIZYOMED

✪ FEATURES

- 2 Part treatment and examination table.
- Electrical motor to adjust height
- Hand controller for easy operation
- An opening in the head section for patient comfort
- Head section of the unit can be adjusted between 0° – 45°
- On requested the head rest opening can be closed.
- Adjustable feet section height
- All metal and steel parts have been painted with electrostatic paint to avoid rust.
- High density matress
- Easy clean vinylex leather covering
- Optional, wheels can be installed on request

TEKNIK ÖZELLIKLER / TECHNICAL SPECIFICATION	
Güç Girişi / Power Supply	220-240 V 50/60 Hz
Motor / Motor	1
Güç Tüketimi / Power Consumption	130 VA
Boyu / Length	190 cm (± 10 cm)
Eni / Width	70 cm (± 10 cm)
Elektrikli Yükseklik / Adjustable Height	52-96 cm (± 10 cm)
Hasta Taşıma Kapasitesi / Patient Carriage Capacity	210 kg
Yaklaşık Ağırlığı / Approx. Weight	60-75 kg
Sınıf Beyanı / Class Declaration	class I
Sertifikalar / Certificates	EN ISO 13485 : 2016 CE (Declaration Of Conformity) TPE Tescil no: 2012 03166

PART TREATMENT AND EXAMINATION TABLE-FIZYOMED

FEATURES

- 3 Part treatment and examination table.
- Electrical motor to adjust height
- Hand controller for easy operation
- An opening in the head section for patient comfort
- Head section of the unit can be adjusted between 0° – 45°
- On requested the head rest opening can be closed.
- Adjustable feet section height
- All metal and steel parts have been painted with electrostatic paint to avoid rust.
- High density matress
- Easy clean winylex leather covering

TEKNIK ÖZELLIKLER / TECHNICAL SPECIFICATION	
Güç Girişi / Power Supply	220-240 V 50/60 Hz
Motor / Motor	1
Güç Tüketimi / Power Consumption	130 VA
Boyu / Length	200 cm (± 10 cm)
Eni / Width	70 cm (± 10 cm)
Elektrikli Yükseklik / Adjustable Heigth	52-96 cm (± 10 cm)
Hasta Taşıma Kapasitesi / Patient Carriage Capacity	210 kg
Yaklaşık Ağırlığı / Approx. Weighth	60-75 kg
Sınıf Beyanı / Class Declaration	class I
Sertifikalar / Certificates	EN ISO 13485 : 2016
	CE (Declaration Of Conformity)
	TPE Tescil no: 2012 03166

STANDING TABLE-FIZYOMED

FEATURES

- The patient in an upright position to hold feature
- Laminate work desk
- Heel, the knee, the femur and hip support
- The patient connecting belt
- Lockable wheels
- Rust and against external factors and chrome plated metal parts
- Optional different sizes (adult and children) manufacturing facilities

TEKNIK ÖZELLIKLER / TECHNICAL SPECIFICATION	
Boyu / Length	80 cm
Eni / Width	63 cm
Yükseklik / Heigth	94 cm
Hasta Taşıma Kapasitesi / Patient Carriage Capacity	140 kg
Yaklaşık Ağırlığı / Approx. Weighth	30 kg
Sınıf Beyanı / Class Declaration	class I
Sertifikalar / Certificates	EN ISO 13485 : 2016
	CE (Declaration Of Conformity)

CHIROPRACTIC TREATMENT AND EXAMINATION TABLE-FIZYOMED

CHIROPRACTIC TREATMENT & EXAMINATION TABLE

- 6 part
- Electrical motor to adjust heigh
- Head section of the unit can be adjusted between downwards -300 and upwards +300
- All pieces elevate +150 up and their hardness degree can be adjusted
- Hand controller for easy operation
- All metal and steel parts have been painted with electrostatic paint to avoid rust
- High density matress
- Easy clean winylex leather covering

TEKNIK ÖZELLIKLER / TECHNICAL SPECIFICATION	
Güç Girişi / Power Supply	220-240 V 50/60 Hz
Motor / Motor	1
Boyu / Length	200 cm
Eni / Width	60 cm
Elektrikli Yükseklik / Adjustable Helgth	65-105 cm
Hasta Taşıma Kapasitesi / Patient Carriage Capacity	210 kg
Yaklaşık Ağırlığı / Approx. Welgth	105 kg
Sınıf Beyanı / Class Declaration	class I
Sertifikalar / Certificates	EN ISO 13485 : 2016
	CE (Declaration Of Conformity)

WOODEN TREATMENT AND EXAMINATION TABLE-FIZYOMED

✪ FEATURES

- Treatment and examination table made up of 2 parts.
- Head section of the unit can be adjusted between 0° – 35°
- Two drawers
- An opening in the head section for patient comfort
- Winylex leather matress for easy cleaning

TEKNIK ÖZELLIKLER / TECHNICAL SPECIFICATION	
Boyu / Length	185 cm (± 10 cm)
Eni / Width	70 cm (± 10 cm)
Yükseklik / Heigth	70 cm (± 10 cm)
Hasta Taşıma Kapasitesi / Patient Carriage Capacity	160 kg
Yaklaşık Ağırlığı / Approx. Weighth	45 kg
Sınıf Beyanı / Class Declaration	class I
Sertifikalar / Certificates	EN ISO 13485 : 2016
	CE (Declaration Of Conformity)

SECTION ELECTRIC CARDIOLOGY TABLE-CONFYCARE

A strong two section cardiology table with comfortable sewn edge upholstery, central lock castors, electric backrest & two special cardiac cut outs allowing increased patient access. With a sleek design, great features and foot switch as standard it is simple to operate straight from the box without any assembly required.

Technical data

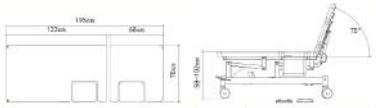

Cutout size	Angle of back section	Wheel	Product weight	Volume	Packing size
32cm x 25cm	0°~+75°	ϕ125mm	62kgs	0.91m3	199x75x61cm
12.6" x 9.8"	0°~+75°	ϕ5"	136lbs	0.91m3	78.4"x29.5"x24"

✪ FEATURES

- Electric Hi-Lo operation and backrest operation by foot switch
- Electric backrest for effortless operation
- Dual cut outs for easy patient access
- Comfortable sewn edge upholstery
- Sleek design with rounded frame legs for safety
- 125mm/5'' central lock castors for safety and mobility
- Reliable TiMOTION motor
- Height range from 58-102cm/22.8''-40.2'' in approx 30 seconds
- Padding thickness 5cm/2''
- Foam Density: 36kg/m3(79.41lbs/m3)
- Warranty: 5 Years Construction, 3 Years Electrics
- Upholstery: PVC vinyl that is fire retardant and meet the requirement of BS 5852, stain, mildew, and wear resistance 150,000 times
- Qualification: ISO13485/ Passed MDR CE certification / Registered with the FDA in the United States
- Weight Capacity: 250kgs/551lbs

Product model

BASE | EL02C

LxWxH	195x70x(58-102)cm 76.8"x27.6"x22.8"-40.2"
Control mode	motor
Height adjustment	foot switch
Lifting speed	30s
Down speed	30s

Color of vinyl

SECTION ELECTRIC TREATMENT TABLE WITH ARMREST-CONFYCARE

Two section table with armrest
This table is designed with a multi-postion head section for more treatment and examination.This table addresses the requirements of a wide range of manual handling issues to benefit both patient and doctor.

Technical data

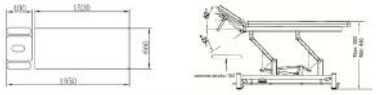

Angle of head section	Padding thickness	Wheel	Product weight	Volume	Packing size
-45°~ +40°	5cm	ϕ75mm	64kgs	0.72m3	199x70x51cm
-45°~ +40°	2"	ϕ3"	141lbs	0.72m3	78.4"x27.6"x20cm

FEATURES

- Electric Hi-Lo operation by foot bar
- Sleek design with rounded frame legs for safety
- Comfortable head cushion with prone armrest
- Adjustable feet for uneven surfaces
- 75mm/3'' retractable castors for safety and mobility
- Reliable TiMOTION motor
- Height range from 48-92cm/19''-36'' in approx 30 seconds
- Padding thickness 5cm/2''
- Foam Density: 36kg/m3(79.41lbs/m3)
- Warranty: 5 Years Construction, 3 Years Electrics
- Upholstery: PVC vinyl that is fire retardant and meet the requirement of BS 5852, stain, mildew, and wear resistance 150,000 times
- Qualification: ISO13485/ Passed MDR CE certification / Registered with the FDA in the United States
- Weight Capacity: 250kgs/551lbs

Product model

BASE | EL022

LxWxH	195x66x(48-92)cm 76.8"x26"x19"-36"
Control mode	motor
Height adjustment	foot bar
Adjustable foot bar	360°
Lifting speed	30s
Down speed	30s

Color of vinyl

SECTION ELECTRIC TREATMENT TABLE WITH GRIP ARMREST-CONFYCARE

Two section table with armrest
This table is designed with a multi-postion head section for more treatment and examination.This table addresses the requirements of a wide range of manual handling issues to benefit both patient and doctor.

Technical data

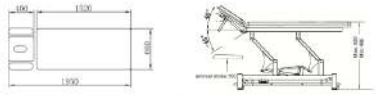

Angle of head section	Padding thickness	Wheel	Product weight	Volume	Packing size
-45°~ +40°	5cm	ϕ75mm	64kgs	0.72m3	196x70x51cm
-45°~ +40°	2"	ϕ3"	141lbs	0.72m3	78.4"x27.6"x20cm

FEATURES

- Electric Hi-Lo operation by foot bar
- Sleek design with rounded frame legs for safety
- Comfortable head cushion with grip armrest
- Adjustable feet for uneven surfaces
- 75mm/3'' retractable castors for safety and mobility
- Reliable TiMOTION motor
- Height range from 48-92cm/19''-36'' in approx 30 seconds
- Padding thickness 5cm/2''
- Foam Density: 36kg/m3(79.41lbs/m3)
- Warranty: 5 Years Construction, 3 Years Electrics
- Upholstery: PVC vinyl that is fire retardant and meet the requirement of BS 5852, stain, mildew, and wear resistance 150,000 times
- Qualification: ISO13485/ Passed MDR CE certification / Registered with the FDA in the United States
- Weight Capacity: 250kgs/551lbs

Product model

BASE | EL022AR

LxWxH	195x66x(48-92)cm 76.8"x26"x19"-36"
Control mode	motor
Height adjustment	foot bar
Adjustable foot bar	360°
Lifting speed	30s
Down speed	30s

Color of vinyl

SECTION ELECTRIC TREATMENT TABLE-CONFYCARE

This strong two section table will withstand the rigours of patient treatment whether it is used in a demanding Physiotherapy clinic or a small GP practice you can rest assured it will perform. With a sleek design, great features and a foot bar as standard it is simple to operate straight from the box without any assembly required.

Technical data

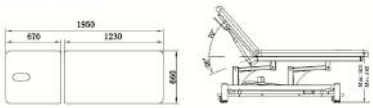

Angle of head section	Padding thickness	Wheel	Product weight	Volume	Packing size
-20°~+70°	5cm	ϕ75mm	60kgs	0.75m3	199x74x51cm
-20°~+70°	2"	ϕ3"	132.3lbs	0.75m3	78.4"x29"x20"

FEATURES

- Electric Hi-Lo operation by foot bar
- Sleek design with rounded frame legs for safety
- Head section has face hole and plug
- Adjustable feet for uneven surfaces
- 75mm/3'' retractable castors for safety and mobility
- Reliable TiMOTION motor
- Height range from 48-92cm/19''-36'' in approx 30 seconds
- Padding thickness 5cm/2''
- Foam Density: 36kg/m3(79.41lbs/m3)
- Warranty: 5 Years Construction, 3 Years Electrics
- Upholstery: PVC vinyl that is fire retardant and meet the requirement of BS 5852, stain, mildew, and wear resistance 150,000 times
- Qualification: ISO13485/ Passed MDR CE certification / Registered with the FDA in the United States
- Weight Capacity: 250kgs/551lbs

Product model

BASE | EL02

LxWxH	195x66x(48-92)cm 76.8"x26"x19"-36"
Control mode	motor
Height adjustment	foot bar
Adjustable foot bar	360°
Lifting speed	30s
Down speed	30s

Color of vinyl

SECTION ARMRESTS ELECTRIC TREATMENT TABLE-CONFYCARE

Designed for clinical use in physical therapy and general medicine, it enables precise patient positioning while minimizing practitioner strain

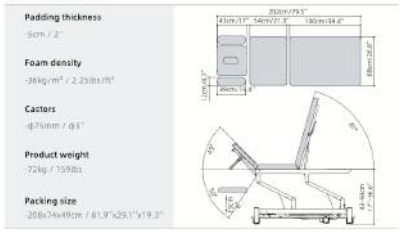

Technical data

Padding thickness
5cm / 2"

Foam density
36kg/m³ / 2.25lbs/ft³

Castors
Ø75mm / Ø3"

Product weight
72kg / 159lbs

Packing size
208x74x49cm / 81.9"x29.1"x19.3"

✪ FEATURES

Key product features:

- **ADA-compliant low-height table, 43cm/17'' in height for accessibility**
- **Electric Hi-Lo operation controlled by foot bar**
- **Support therapeutic positioning of the neck, back, arms, and legs**
- **Closed base frame design for easy cleaning and maintenance**

- Overall Dimensions: Length 202cm/79.5'', Width 68cm/26.8'' Height Adjustment: From 43cm/17'' to 93cm/36.6''
- Head section: –50° to +45° by gas spring controlled
- Leg section: 0° to +85° by gas spring controlled
- Motor: Equipped with a premium-quality TIMOTION motor for smooth operation
- Breathing Hole: Welded and taped seams with plug included
- Upholstery Foam: 5cm/2'' thickness with a density of 36kg/m3 (2.25lbs/ft3)
- Vinyl: Fire-retardant PVC vinyl (BS 5852 compliant, 150,000 abrasion cycles)
- Castor System: One lever controls four retractable castors (Ø75mm/3'')
- Mains Supply: 100–240V AC, 50/60 Hz, Class II
- Weight Capacity: 250kg/551lbs, optional: 280kg/617lbs Warranty: 5 years
- Certifications: ISO13485, CE, UKCA, TGA, FDA approved

Product details

Fully closed metal base | 360° adjustable foot bar | Height adjustable padded armrests | 75mm/3'' silent castors

Product model PRO SERIES

Product Name
EL032PRO23

Control mode	Motor
Height adjustment	Foot bar
Adjustable foot bar	360°
Lifting/Down speed	30s
LxWxH	202x68x(43-93)cm 79.5"x26.8"x(17"-36.6")

Product Name
EL032PRO29

Control mode	Hydraulic
Height adjustment	Foot pedal
Adjustable foot pedal	Both side of table
Lifting/Down speed	12s
LxWxH	202x68x(43-93)cm 79.5"x26.8"x(17"-36.6")

Product Name
EL032PRO37

Control mode	High-speed motor
Height adjustment	Foot bar
Adjustable foot bar	360°
Lifting/Down speed	20s
LxWxH	202x68x(43-93)cm 79.5"x26.8"x(17"-36.6")

SECTION ELECTRIC TREATMENT TABLE WITH ARMREST-CONFYCARE

A popular selection for physiotherapists.This table offers strong smooth electric hi-looperation through foot switch along with a generous range of motion for the head & backrest. This table will allow correct patient positioning while reducing practitioner strain.

Technical data

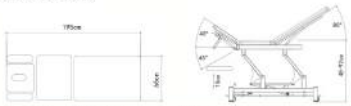

Angle of head section	Angle of leg section	Wheel	Product weight	Volume	Packing size
-45°~ +40°	0°~ +80°	ϕ75mm	65kgs	0.73m3	194x70x53cm
-45°~ +40°	0°~ +80°	ϕ3"	143.3lbs	0.73m3	76.4"x27.6"x20.9"

Product model

BASE | EL032

LxWxH	195x66x(48-92)cm 76.8"x26"x19"-36"
Control mode	motor
Height adjustment	foot bar
Adjustable foot bar	360°
Lifting speed	30s
Down speed	30s

✪ FEATURES

- Electric Hi-Lo operation by foot bar
- Sleek design with rounded frame legs for safety
- Height adjustable padded armrests
- Head section has face hole and plug
- Height range from 48-92cm/19''-36'' in approx 30 seconds
- Adjustable feet for uneven surfaces
- 75mm/3'' retractable castors for safety and mobility
- Reliable TiMOTION motor
- Padding thickness 5cm/2''
- Foam Density: 36kg/m3(79.41lbs/m3)
- Warranty: 5 Years Construction, 3 Years Electrics
- Upholstery: PVC vinyl that is fire retardant and meet the requirement of BS 5852, stain, mildew, and wear resistance 150,000 times
- Qualification: ISO13485/ Passed MDR CE certification / Registered with the FDA in the United States
- Weight Capacity: 250kgs/551lbs

Product details

SECTION ELECTRIC TREATMENT TABLE-CONFYCARE

Designed for clinical use in physical therapy and general medicine, it enables precise patient positioning while minimiz- ing practitioner strain.

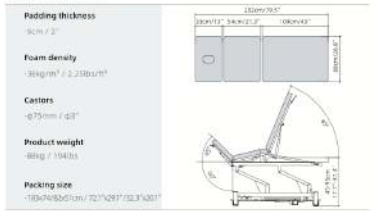

Fully closed metal base

360° adjustable foot bar

Postural drainage design

75mm/3'' silent castors

Product model PRO SERIES

Product Name

EL031PRO23

Control mode	motor
Height adjustment	foot bar
Adjustable foot bar	360°
Lifting/Down speed	30s
LxWxH	202x68/76x(45-95)cm 79.5"x26.8"/30"x(17.7"-37.4")

Product Name

EL031PRO37

Control mode	high-speed motor
Height adjustment	foot bar
Adjustable foot bar	360°
Lifting/Down speed	20s
LxWxH	202x68/76x(45-95)cm 79.5"x26.8"/30"x(17.7"-37.4")

✪ FEATURES

Key product features:

- **Electric Hi-Lo operation controlled by foot bar**
- **Electrically adjustable for postural drainage positioning at 25°**
- **Support the rapeutic positioning of the neck, back, and leg**
- **Closed base frame design for easy cleaning and maintenance**

- Overall Dimensions: Length 202cm/79.5'', Width 68cm/26.8'' optional 76cm/30'' Height Adjustment: From 45cm/17.7'' to 95cm/37.4''
- Head section: −90° to +45° / Leg section: 0° to +85° by gas spring controlled Trendelenburg (head-down): up to 25° by motor controlled
- Motors: Equipped with two premium-quality TIMOTION motors for smooth operation
- Breathing Hole: Welded and taped seams with plug included
- Upholstery Foam: 5cm/2'' thickness with a density of 36kg/m3 (2.25lbs/ft3)
- Vinyl: Fire-retardant PVC vinyl (BS 5852 compliant, 150,000 abrasion cycles)
- Castor System: One lever controls four retractable castors (Ø75mm/3'') Mains Supply: 100–240V AC, 50/60 Hz, Class II
- Weight Capacity: 250kg/551lbs, optional: 280kg/617lbs
- Warranty: 5 years
- Certifications: ISO13485, CE, UKCA, TGA, FDA approved

SECTION EQUAL ALL ELECTRIC TREATMENT TABLE-CONFYCARE

This equal all electric treatment table provides a strong and versatile frame and upholstery. This table have very strong and versatile, suitable for a wide range of manual therapy techniques, Various medical procedures, osteopathy, massage and complimentary medicine.

Technical data

Angle of head section	Angle of leg section	padding thickness	Product weight	Volume	Packing size
-40°~+75°	-40°~+75°	5cm	71kgs	0.74m3	186x74x54cm
-40°~+75°	-40°~+75°	2"	154.3lbs	0.74m3	73.2"x29"x21.3"

Product model

BASE | EL03EM3

LxWxH	195x70x(49-93)cm 76.8"x27.6"x19.3"-36.6"
Control mode	motor
Height adjustment	foot switch
Lifting speed	30s
Down speed	30s

BASE | EL03EM3B

LxWxH	195x80x(53-93)cm 76.8"x31.5"x21.9"-36.6"
Load capacity	350kg
Castor	125mm

Medical-grade Castors-Optimized for Safe Patient Transfer.

✪ FEATURES

- Electric Hi-Lo operation by foot switch
- Sleek design with rounded frame legs for safety
- Head section has face hole and plug
- Height range from 49-93cm/19.3''-36.6'' in approx 30 seconds
- Adjustable feet for uneven surfaces
- 75mm/3'' retractable castors for safety and mobility
- 3 reliable TiMOTION motors
- Padding thickness 5cm/2''
- Foam Density: 36kg/m3(79.41lbs/m3)
- Warranty: 5 Years Construction, 3 Years Electrics
- Upholstery: PVC vinyl that is fire retardant and meet the requirement of BS 5852, stain, mildew, and wear resistance 150,000 times
- Qualification: ISO13485/ Passed MDR CE certification / Registered with the FDA in the United States
- Weight Capacity: 250kgs/551lbs

SECTION EQUAL ELECTRIC TREATMENT TABLE-CONFYCARE

This table is designed for a equal length for each section, suitable for a wide range of treatment and other therapy. It also provides easily adjustable height for head & back section by double gas struts.

Technical data

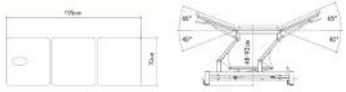

Angle of head section	Angle of leg section	Wheel	Product weight	Volume	Packing size
-40°~ +65°	-40°~ +65°	Φ75mm	63kgs	0.74m3	186x74x54cm
-40°~ +65°	-40°~ +65°	Φ3''	138.9lbs	0.74m3	73.2"x29"x21.3"

Product model

BASE | EL03EM

LxWxH	195x70x(48-92)cm 76.8"x27.6"x19''-36''
Control mode	motor
Height adjustment	foot bar
Adjustable foot bar	360°
Lifting speed	30s
Down speed	30s

FEATURES

- Electric Hi-Lo operation by foot bar, electric back section operation by foot switch
- Sleek design with rounded frame legs for safety
- Head section has face hole and plug
- Height range from 48-92cm/19''-36'' in approx 30 seconds
- Adjustable feet for uneven surfaces
- 75mm/3'' retractable castors for safety and mobility
- 2 reliable TiMOTION motors
- Padding thickness 5cm/2''
- Foam Density: 36kg/m3(79.41lbs/m3)
- Warranty: 5 Years Construction, 3 Years Electrics
- Upholstery: PVC vinyl that is fire retardant and meet the requirement of BS 5852, stain, mildew, and wear resistance 150,000 times
- Qualification: ISO13485/ Passed MDR CE certification / Registered with the FDA in the United States
- Weight Capacity: 250kgs/551lbs

SECTION ELECTRIC TRACTION TABLE-CONFYACARE

This premium traction table is designed and built with finest materials and finishing quality through modern engineering techniques. Table is sturdy and meet all the criteria to optimize the patients' treatment. Traction table is generally for orthopaedic practitioners.

Technical data

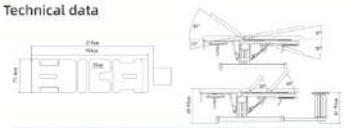

Height of platform	Angle of back section	Angle of lower limb	Angle of 3rd section	Angle of 4th section	Volume	Packing size
61-91cm	-10°~+35°	-15°~+10°	0°~+50°	0°~+50°	1.1m3	199x74x75cm
24"-35.8"	-10°~+35°	-15°~+10°	0°~+50°	0°~+50°	1.1m3	78.4"x29"x29.5"

Product model

BASE | ELT042

LxWxH	194x73,6x(65-95)cm 76.4"x29"x25.6"-37.4"
Control mode	motor
Height adjustment	handset
Lifting speed	23s
Down speed	23s

✪ FEATURES

- Electric Hi-Lo operation by handset
- Electric adjustable height, back section, leg section, Trendelenburg & Reverse Trendelenburg Accurate foot brake for safety
- Head section has face hole and plug
- Removable padded wing armrests
- Adjustable traction platform and rope angle
- Universal wheels for safety and mobility
- Reliable column motor
- Max traction of 10cm/4'' between the 2nd and 3rd section
- Height range from 65-95cm/25.6''-37.4'' in approx 30 seconds
- Padding thickness 5cm/2''
- Foam Density: 36kg/m3(79.41lbs/m3)
- Warranty: 5 Years Construction, 3 Years Electrics
- Upholstery: PVC vinyl that is fire retardant and meet the requirement of BS 5852, stain, mildew, and wear resistance 150,000 times
- Qualification: ISO13485/ Passed MDR CE certification / Registered with the FDA in the United States
- Weight Capacity: 250kgs/551lbs

SECTION ELECTRIC TRACTION TABLE-CONFYCARE

Designed for clinical use in physical therapy, it enables effective static and intermittent cervical and lumbar traction with a built-in flexion stool and adjustable mount.

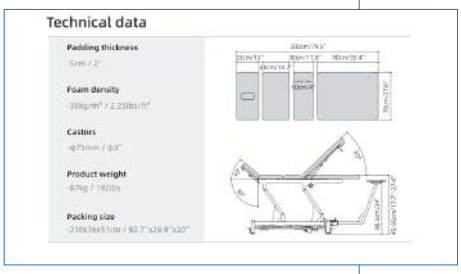

Fully closed metal base

360° adjustable foot bar

Head hole and plug

75mm/3'' silent castors

Product model PRO SERIES

Product Name

EL04PRO23

Control mode	Motor
Height adjustment	Foot bar
Adjustable foot bar	360°
Lifting/Down speed	30s
LxWxH	202x70x(45-95)cm 79.5"x27.6"x(17.7"-37.4")

Product Name

EL04PRO37

Control mode	High-speed motor
Height adjustment	Foot bar
Adjustable foot bar	360°
Lifting/Down speed	20s
LxWxH	202x70x(45-95)cm 79.5"x27.6"x(17.7"-37.4")

✪ FEATURES

Key product features:

- **4 section independently adjustable thigh and calf section for precise positioning**
- **Electric Hi-Lo operation controlled by foot bar**
- **Table with built-in flexion stool and belt**
- **Closed base frame design for easy cleaning and maintenance**

- Overall Dimensions: Length 202cm/79.5'', Width 70cm/27.6'' Height Adjustment: From 45cm/17.7'' to 95cm/37.4''
- Head section: –90° to +45° by gas spring controlled
- Leg section: 0° to +85° by gas spring controlled
- Motor: Equipped with a premium-quality TIMOTION motor for smooth operation Breathing Hole: Welded and taped seams with plug included
- Upholstery Foam: 5cm/2'' thickness with a density of 36kg/m3 (2.25lbs/ft3)
- Vinyl: Fire-retardant PVC vinyl (BS 5852 compliant, 150,000 abrasion cycles)
- Castor System: One lever controls four retractable castors (Ø75mm/3'')
- Mains Supply: 100–240V AC, 50/60 Hz, Class II
- Weight Capacity: 250kg/551lbs, optional: 280kg/617lbs Warranty: 5 years
- Certifications: ISO13485, CE, UKCA, TGA, FDA approved

SECTION ELECTRIC TREATMENT TABLE-CONFYCARE

Designed for clinical use in physical therapy and general medi- cine, providing precise 5-section adjustment to support patients' neck, back, and legs during treatment and examination.

Technical data

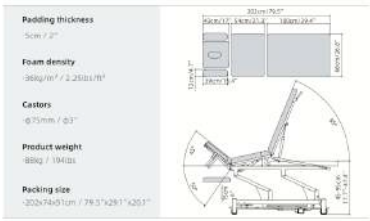

Product details

Fully closed metal base | Postural drainage design | Height adjustable padded armrests | 75mm/3'' silent castors

Product model PRO SERIES

Product Name
EL05PRO23

Control mode	Motor
Height adjustment	Foot bar
Adjustable foot bar	360°
Lifting/Down speed	30s
LxWxH	202x68x(45-95)cm 79.5"x26.8"x(17.7"-37.4")

Product Name
EL05PRO37

Control mode	High-speed motor
Height adjustment	Foot bar
Adjustable foot bar	360°
Lifting/Down speed	20s
LxWxH	202x68x(45-95)cm 79.5"x26.8"x(17.7"-37.4")

✪ FEATURES

Key product features:

- **Electric Hi-Lo operation controlled by foot bar**
- **Electrically adjustable for postural drainage positioning at 25°**
- **Support the rapeutic positioning of the neck, back, and legs**
- **Closed base frame design for easy cleaning and maintenance**

- Overall Dimensions: Length 202cm/79.5'', Width 68cm/26.8''
- Height Adjustment: From 45cm/17.7'' to 95cm/37.4''
- Head section: –50° to +45° / Leg section: 0° to +85° by gas spring controlled Trendelenburg (head-down): up to 25° by motor controlled
- Motors: Equipped with two premium-quality TIMOTION motors for smooth operation
- Breathing Hole: Welded and taped seams with plug included
- Upholstery Foam: 5cm/2'' thickness with a density of 36kg/m3 (2.25lbs/ft3)
- Vinyl: Fire-retardant PVC vinyl (BS 5852 compliant, 150,000 abrasion cycles)
- Castor System: One lever controls four retractable castors (∅75mm/3'')
- Mains Supply: 100–240V AC, 50/60 Hz, Class II
- Weight Capacity: 250kg/551lbs, optional: 280kg/617lbs
- Warranty: 5 years
- Certifications: ISO13485, CE, UKCA, TGA, FDA approved

SECTION MULTI-POSITION ELECTRIC TREATMENT TABLE-CONFYCARE

A popular selection for physiotherapists this five section table offers strong smooth electric hi-lo and postural drainage operation through foot switch along with a generous range of motion for the head & backrest.

Technical data

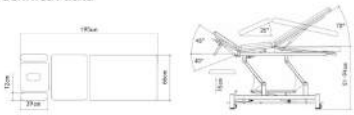

Angle of head section	Angle of chest section	Angle of leg section	Product weight	Volume	Packing size
-40°~ +45°	0°~ +25°	0°~ +70°	78kgs	0.81m3	195x78x58cm
-40°~ +45°	0°~ +25°	0°~ +70°	167.6lbs	0.81m3	76.8"x27.6"x22.8"

Product model

BASE | EL05

LxWxH	195x66x(51-94)cm 76.8"x26"x20"-37"
Control mode	motor
Height adjustment	foot bar
Adjustable foot bar	360°
Lifting speed	30s
Down speed	30s

Color of vinyl

✪ FEATURES

- Electric Hi-Lo operation by foot bar
- Electric postural drainage operation by foot switch
- Sleek design with rounded frame legs for safety
- Height adjustable padded armrests
- Head section has face hole and plug
- Adjustable feet for uneven surfaces
- 75mm/3'' retractable castors for safety and mobility
- Reliable TiMOTION motor
- Height range from 51-94cm/20''-37'' in approx 30 seconds
- Padding thickness 5cm/2''
- Foam Density: 36kg/m3(79.41lbs/m3)
- Warranty: 5 Years Construction, 3 Years Electrics
- Upholstery: PVC vinyl that is fire retardant and meet the requirement of BS 5852, stain, mildew, and wear resistance 150,000 times
- Qualification: ISO13485/ Passed MDR CE certification / Registered with the FDA in the United States
- Weight Capacity: 250kgs/551lbs

SECTION SPLIT-LEG ELECTRIC TREATMENT TABLE-CONFYCARE

Specially designed a split-leg at backrest for more strong function, provides amazing function and stability, with widest choice for user's requirements.

Technical data

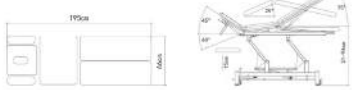

Angle of head section	Angle of chest section	Angle of leg section	Product weight	Volume	Packing size
-40°~ +45°	0°~ +25°	0°~ +75°	80kgs	0.81m3	195x70x58cm
-40°~ +45°	0°~ +25°	0°~ +75°	176.4lbs	0.81m3	76.8"x27.6"x22.8"

Product model

BASE | EL06

LxWxH	195x66x(51-94)cm 76.8"x26"x20"-37"
Control mode	motor
Height adjustment	foot bar
Adjustable foot bar	360°
Lifting speed	30s
Down speed	30s

Product details

✪ FEATURES

- Electric Hi-Lo operation by foot bar
- Electric postural drainage operation by foot switch
- Sleek design with rounded frame legs for safety
- Height adjustable padded armrests
- Head section has face hole and plug
- Adjustable feet for uneven surfaces
- 75mm/3'' retractable castors for safety and mobility
- Reliable TiMOTION motor
- Height range from 51-94cm/20''-37'' in approx 30 seconds
- Padding thickness 5cm/2''
- Foam Density: 36kg/m3(79.41lbs/m3)
- Warranty: 5 Years Construction, 3 Years Electrics
- Upholstery: PVC vinyl that is fire retardant and meet the requirement of BS 5852, stain, mildew, and wear resistance 150,000 times
- Qualification: ISO13485/ Passed MDR CE certification / Registered with the FDA in the United States
- Weight Capacity: 250kgs/551lbs

SECTION ELECTRIC TREATMENT TABLE-CONFYCARE

Designed for clinical use in physical therapy and general medi- cine, providing precise 7-section adjustment to support patients' neck, back, arms, and legs during treatment and examination.

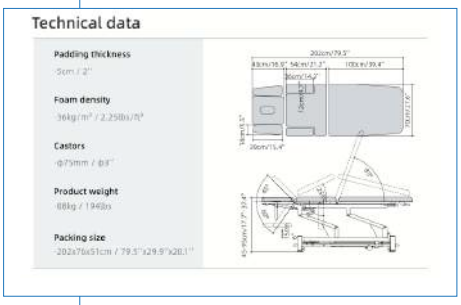

Technical data

Padding thickness	5cm / 2"
Foam density	36kg/m³ / 2.25lb/ft³
Castors	Φ75mm / Φ3"
Product weight	88kg / 194lbs
Packing size	202x70x51cm / 79.5"x29.9"x20.1"

✪ FEATURES

Key product features:

- **Electric Hi-Lo operation controlled by foot bar**
- **Electrically adjustable for postural drainage positioning at 25°**
- **Support the rapeutic positioning of the neck, back, arms and legs**
- **Closed base frame design for easy cleaning and maintenance**

- Overall Dimensions: Length 202cm/79.5'', Width 70cm/27.6''
- Height Adjustment: From 45cm/17.7'' to 95cm/37.4''
- Head section: –90° to +45° / Leg section: 0° to +85° by gas spring controlled
- Trendelenburg (head-down): up to 25° by motor controlled
- Motors: Equipped with two premium-quality TIMOTION motors for smooth operation Breathing Hole: Welded and taped seams with plug included
- Upholstery Foam: 5cm/2'' thickness with a density of 36kg/m3 (2.25lbs/ft3)
- Vinyl: Fire-retardant PVC vinyl (BS 5852 compliant, 150,000 abrasion cycles)
- Castor System: One lever controls four retractable castors (Ø75mm/3'')
- Mains Supply: 100–240V AC, 50/60 Hz, Class II
- Weight Capacity: 250kg/551lbs, optional: 280kg/617lbs
- Warranty: 5 years
- Certifications: ISO13485, CE, UKCA, TGA, FDA approved

Product model PRO SERIES

Product Name
EL052PRO23

Control mode	Motor
Height adjustment	Foot bar
Adjustable foot bar	360°
Lifting/Down speed	30s
LxWxH	202x70x(45-95)cm 79.5"x27.6"x(17.7"-37.4")

Product Name
EL052PRO37

Control mode	High-speed motor
Height adjustment	Foot bar
Adjustable foot bar	360°
Lifting/Down speed	20s
LxWxH	202x70x(45-95)cm 79.5"x27.6"x(17.7"-37.4")

Product details

Fully closed metal base

Postural drainage design

Foldable padded wing armrests

75mm/3'' silent castors

SECTION MULTI-POSITION ELECTRIC TREATMENT TABLE-CONFYCARE

This table has a very strong table designed to withstand constant heavy use with minimal maintenance.It addresses the requirements of a wide range of manual handling issues to benefit both patient and doctor.

Technical data

Angle of head section	Angle of back section	Angle of seat section	Angle of leg section	Product weight	Volume	Packing size
-45°~ +35°	0°~ +55°	0°~ +20°	0°~ -45°	85kgs	0.73m3	194x70x53cm
-45°~ +35°	0°~ +55°	0°~ +20°	0°~ -45°	187lbs	0.73m3	76.4"x27.6"x20.9"

Product model

BASE | EL10

LxWxH	195x67x(52-96)cm 76.8"x26.4"x20.5"-37.6"
Control mode	motor
Height adjustment	foot bar
Adjustable foot bar	360°
Lifting speed	30s
Down speed	30s

Product details

FEATURES

- Electric Hi-Lo operation by foot bar
- Sleek design with rounded frame legs for safety
- Height adjustable padded armrests and folding side handrail
- Head section has face hole and plug
- Split-leg flexion leg plate
- Adjustable feet for uneven surfaces
- 75mm/3'' retractable castors for safety and mobility
- Reliable TiMOTION motor
- Height range from 52-96cm/20.5''-37.8'' in approx 30 seconds
- Padding thickness 5cm/2''
- Foam Density: 36kg/m3(79.41lbs/m3)
- Warranty: 5 Years Construction, 3 Years Electrics
- Upholstery: PVC vinyl that is fire retardant and meet the requirement of BS 5852, stain, mildew, and wear resistance 150,000 times
- Qualification: ISO13485/ Passed MDR CE certification / Registered with the FDA in the United States
- Weight Capacity: 250kgs/551lbs

ALUMINIUM PORTABLE MESSAGE-CONFYCARE

ALUMINUM PORTABLE MASSAGE TABLE

Product model

CFAL05F

LxWxH	185×66×(65-80)cm 72.8"x26"x(26"-31.5")
Weight	18kg/40lbs
Frame material	Aluminum
Weight capacity	220kg/485lbs
Foam thickness	5cm/2"
Folded size	93×67×17cm 36.6"x26.4"x6.7"

PORTABLE MASSAGE CHAIR

CFMC03A

LxWxH	54×76×(120-127)cm 21.3"x29.9"x(47.2"-50")
Weight	36kg/79lbs
Frame material	Aluminum
Weight capacity	180kg/397lbs
Foam thickness	5cm/2"
Folded size	54×29×118cm 21.3"x11.4"x46.5"

CONTOURED ELECTRIC TREATMENT TABLE-CONFYCARE

Designed for osteopathic manipulative treatment, the prone armrests and padded side armrests ensure patient comfort and relaxation during treatment.

Technical data

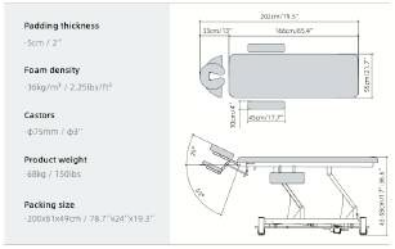

✪ FEATURES

Key product features:

- **ADA-compliant low-height table, 43cm/17'' in height for accessibility**
- **Electric Hi-Lo operation controlled by foot bar**
- **Padded, adjustable armrests (prone and side) for patient comfort and relaxation**
- **Closed base frame design for easy cleaning and maintenance**

- Overall Dimensions: Length 202cm/79.5'', Width 55cm/21.7''
- Height Adjustment: From 43cm/17'' to 93cm/36.6''
- Motor: Equipped with a premium-quality TIMOTION motor for smooth operation
- Breathing Hole: Welded and taped seams with plug included
- Upholstery Foam: 5cm/2'' thickness with a density of 36kg/m3 (2.25lbs/ft3)
- Vinyl: Fire-retardant PVC vinyl (BS 5852 compliant, 150,000 abrasion cycles)
- Castor System: One lever controls four retractable castors (Ø75mm/3'')
- Mains Supply: 100–240V AC, 50/60 Hz, Class II
- Weight Capacity: 250kg/551lbs, optional: 280kg/617lbs
- Warranty: 5 years
- Certifications: ISO13485, CE, UKCA, TGA, FDA approved

Fully closed metal base

Padded prone armrests

Padded side armrests

75mm/3'' silent castors

Product model PRO SERIES

Product Name
EL11ARPRO23

Control mode	**Motor**
Height adjustment	Foot bar
Adjustable foot bar	360°
Lifting/Down speed	30s
LxWxH	202x55x(43-93)cm 79.5"x21.7"x(17"-36.6")

Product Name
EL11ARPRO29

Control mode	**Hydraulic**
Height adjustment	Foot pedal
Adjustable foot pedal	Both side of table
Lifting/Down speed	12s
LxWxH	202x55x(43-93)cm 79.5"x21.7"x(17"-36.6")

Product Name
EL11ARPRO37

Control mode	**High-speed motor**
Height adjustment	Foot bar
Adjustable foot bar	360°
Lifting/Down speed	20s
LxWxH	202x55x(43-93)cm 79.5"x21.7"x(17"-36.6")

ELECTRIC BLOOD CHAIR-CONFYACARE

Realization of people-oriented design and original products to meet the donor's sense of security and comfort of donors to alleviate the psychological pressure, blood the whole process easier and enjoyable.

Technical data

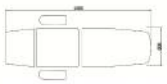

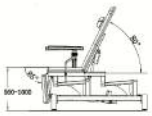

Angle of back section	Angle of leg section	Wheel	Product weight	Volume	Packing size
0°~ +80°	0°~ -85°	Φ75mm	69kgs	0.77m3	164x74x64cm
0°~ +80°	0°~ -85°	Φ3"	152lbs	0.77m3	64.6"x29"x25.2"

Product details

Product model

BASE | EL35B

LxWxH	190x60x(56-100)cm 74.8"x23.6"x22"-39.4"
Control mode	motor
Height adjustment	foot bar
Adjustable foot bar	360°
Lifting speed	30s
Down speed	30s

✪ FEATURES

- Electric Hi-Lo operation by foot bar
- Sleek design with rounded frame legs for safety
- Comfortable flip up armrests
- Removable padded head section
- Adjustable feet for uneven surfaces
- 75mm/3'' retractable castors for safety and mobility
- Reliable TiMOTION motor
- Height range from 56-100cm/22''-39.4'' in approx 30 seconds
- Padding thickness 5cm/2''
- Foam Density: 36kg/m3(79.41lbs/m3)
- Warranty: 5 Years Construction, 3 Years Electrics
- Upholstery: PVC vinyl that is fire retardant and meet the requirement of BS 5852, stain, mildew, and wear resistance 150,000 times
- Qualification: ISO13485/ Passed MDR CE certification / Registered with the FDA in the United States
- Weight Capacity: 250kgs/551lbs

ELECTRIC CHANGING TABLE-CONFYCARE

This electric changing table is designed specifically for use within hospital and home care for changing disabled people.

Technical data

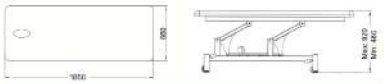

Padding thickness	Foam density	Wheel	Product weight	Volume	Packing size
5cm	36kg/m3	ϕ75mm	57kgs	0.66m3	190x71x51cm
2"	79.41lbs/m3	ϕ3"	126lbs	0.66m3	74.8"x28"x 20"

Product model

BASE | EL01

LxWxH	185x66x(48-92)cm 72.8"x26"x(19"-36")
Control mode	motor
Height adjustment	foot bar
Adjustable foot bar	360°
Lifting speed	30s
Down speed	30s

FEATURES

- Electric Hi-Lo operation by foot bar
- Sleek design with rounded frame legs for safety
- Padded side rails(optional design)
- Face hole and plug
- Adjustable feet for uneven surfaces
- 75mm/3'' retractable castors for safety and mobility
- Reliable TiMOTION motor
- Height range from 48-92cm/19''-36'' in approx 30 seconds
- Padding thickness 5cm/2''
- Foam Density: 36kg/m3(79.41lbs/m3)
- Warranty: 5 Years Construction, 3 Years Electrics
- Upholstery: PVC vinyl that is fire retardant and meet the requirement of BS 5852, stain, mildew, and wear resistance 150,000 times
- Qualification: ISO13485/ Passed MDR CE certification / Registered with the FDA in the United States
- Weight Capacity: 250kgs/551lbs

ELECTRIC BOBATH TABLE-CONFYACARE

Designed for rehabilitation. This strong two section neurological bobath table has been designed with the therapist in mind. The large table top provides plenty of space for patient and therapist and three nose holes and plugs provides flexibility of treatment.

Technical data

Angle of head section	Foam density	Wheel	Product weight	Packing size
0°~ +65°	36kg/m3	ϕ75mm	181kgs	195x125x53cm
0°~ +65°	79.4lbs/m3	ϕ3"	223lbs	76.8"x49"x21"

Product model

BASE | EL02W

LxWxH	190x120x49-93cm 74.8"x47"x19.3"-36.6"
Control mode	motor
Height adjustment	foot bar
Adjustable foot bar	360°
Lifting speed	30s
Down speed	30s

✪ FEATURES

- Electric Hi-Lo operation by foot bar, with adjustable head section angle from 0~ +65°
- Sleek design with rounded frame legs for safety
- Head section has three face holes and plugs
- Super wide table top 120cm/47.2"
- Adjustable feet for uneven surfaces
- 75mm/3"castors for safety and mobility
- Reliable TiMOTION motor
- Height range from 49-93cm/19.3-36.6" in approx 30 seconds
- Padding thickness 5cm/2"
- Foam Density: 36kg/m3 (79.4lbs/m3)
- Warranty: 5 Years Construction, 3 Years Electrics
- Upholstery: PVC vinyl that is fire retardant and meet the requirement of BS 5852, stain, mildew, and wear resistance 150,000 times
- Qualification: ISO13485/ Passed MDR CE certification / Registered with the FDA in the United States
- Weight Capacity: 250kgs/551lbs

ELECTRIC DAY SPAR TABLE-CONFYACARE

Specifically designed to cater for children of all ages through to young adults, these variable height child tilt tables feature dual leg fixation and a wide foot board with fixation facility for securing the feet.

Technical data

Angle of sitting	Angle of footrest	Wheel	Product weight	Volume	Packing size
0°~+85°	-10°~+20°	ϕ100mm	87kgs	0.69m3	162x82x51cm
0°~+85°	-10°~+20°	ϕ4"	191.8lbs	0.69m3	67.8"x32.3"x20"

Product details

Product model

BASE | EL12C

LxWxH	150x56x(47.5-84)cm 59"x22"x18.7"-33"
Control mode	motor
Height adjustment	handset
Lifting speed	30s
Down speed	30s

✪ FEATURES

- Electric Hi-Lo & tilt operation by handset
- Tilt angle inclinator included
- Activity tray & patient straps included
- Head, waist and knee fasteners included
- Crotch support for height adjustment
- Sleek design with rounded frame legs for safety 100mm/4'' retractable castors for safety and mobility
- Reliable TiMOTION motor
- Height range from 47.5-84cm/18.7''-33'' in approx 30 seconds
- Padding thickness 5cm/2''
- Foam Density: 36kg/m3(79.41lbs/m3)
- Upholstery: PVC vinyl that is fire retardant and meet the requirement of BS 5852, stain, mildew, and wear resistance 150,000 times
- Warranty: 5 Years Construction, 3 Years Electrics
- Qualification: ISO13485/ Passed MDR CE certification / Registered with the FDA in the United States
- Weight Capacity: 220kg/485lbs

ELECTRIC DAY SPAR TABLE-CONFYACARE

This electric Hi-Lo table is perfect for use in beauty, day spa and massage. It can be used in numerous comfortable positions with the head and leg section adjusted by gas struts. It has removable padded arm rests on each side that are also height adjustable. The wings next to the head piece are removable for patient comfort in massage allowing them to rest their arms on the prone arm rest.

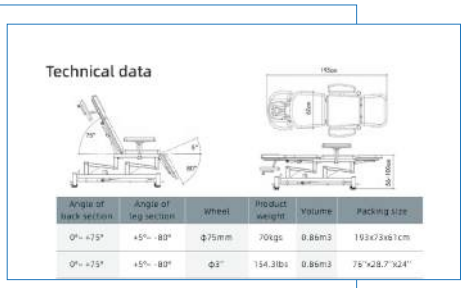

Technical data

Angle of back section	Angle of leg section	Wheel	Product weight	Volume	Packing size
0°~+75°	+5°~-80°	Φ75mm	70kgs	0.86m3	193x73x61cm
0°~+75°	+5°~-80°	Φ3"	154.3lbs	0.86m3	76"x28.7"x24"

Product model

BASE | BT001

LxWxH	195x62x(56-100)cm 76.8"x24.4"x22"-39.4"
Control mode	motor
Height adjustment	foot bar
Adjustable foot bar	360°
Lifting speed	30s
Down speed	30s

✪ FEATURES

- Electric Hi-Lo operation by foot bar
- Luxurious soft and comfortable head cushion
- Sleek design with rounded frame legs for safety
- Removable padded wing armrests
- Padded prone armrest
- Adjustable feet for uneven surfaces
- 75mm/3'' retractable castors for safety and mobility
- Reliable TiMOTION motor
- Height range from 56-100cm/22''-39.4'' in approx 30 seconds
- Padding thickness 75mm/3''
- Foam Density: 36kg/m3
- Warranty: 5 Years Construction, 3 Years Electrics
- Upholstery: PVC vinyl that is fire retardant and meet the requirement of BS 5852, stain, mildew, and wear resistance 150,000 times
- Qualification: ISO13485/ Passed MDR CE certification / Registered with the FDA in the United States
- Weight Capacity: 250kgs/551lbs

ELECTRIC GYNAECOLOGY TABLE-CONFYACARE

Everything you will need for women's health and general examinations all in one table. This flexible table includes foot pads, stirrups, debris tray, a fill section & nose hole with plug allowing for a multitude of different examinations & treatments. It features a smooth hi-lo adjustment & electric seat tilt with foot switch for optimum manoeuvrability and better patient treatment.

Technical data

Angle of back section	Angle of seat section	Wheel	Product weight	Volume	Packing size
0°~ +65°	0°~ +20°	ϕ75mm	79kgs	0.75m3	149x73x69cm
0°~ +65°	0°~ +20°	ϕ3"	174lbs	0.75m3	58.7"x28.8"x27.2"

Product details

Product model

BASE | EL3603

LxWxH	185x60x(62-104)cm 76.8"x23.7"x24.4"-40.9"
Control mode	motor
Height adjustment	foot switch
Lifting speed	30s
Down speed	30s

✪ FEATURES

- Electric Hi-Lo operation and electric seat tilt operation by foot switch
- Sleek design with rounded frame legs for safety
- Foot pads & stirrups both included
- Debris tray & side rails included
- Fill section allowing general use
- Adjustable feet for uneven surfaces
- 75mm/3'' retractable castors for safety and mobility
- Reliable TiMOTION motor
- Height range from 62-104cm/24.4''-40.9'' in approx 30 seconds
- Padding thickness 5cm/2''
- Foam Density: 36kg/m3(79.41lbs/m3)
- Warranty: 5 Years Construction, 3 Years Electrics
- Upholstery: PVC vinyl that is fire retardant and meet the requirement of BS 5852, stain, mildew, and wear resistance 150,000 times
- Qualification: ISO13485/ Passed MDR CE certification / Registered with the FDA in the United States
- Weight Capacity: 250kgs/551lbs

ELECTRIC DYNAMIC TILT TABLE-CONFYCARE

Dynamic Tilt Table is available in a range of configurations to optimize patient care and outcomes, for functional rehabilitation of handicapped or disabled patients and in cardiac assessments.

Technical data

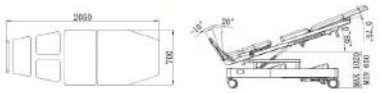

Angle of back section	Angle of tilting	Angle of footrest	Wheel	Product weight	Volume	Packing size
0°~ +75°	0°~ +85°	-10°~ +20°	Φ125mm	162kgs	1.43m3	195x94x78cm
0°~ +75°	0°~ +85°	-10°~ +20°	Φ5''	357.2lbs	1.43m3	76.8"x37"x30.7"

Product details

Product model

BASE | EL12M

LxWxH	205x70x(65-102)cm 80.7"x27.6"x25.6"-40.2"
Control mode	motor
Height adjustment	handset
Lifting speed	30s
Down speed	30s

✪ FEATURES

- Electric Hi-Lo & tilt operation by handset
- Activity tray & patient straps included
- Removable upholstered traction stool & comfortable head cushion
- Optional support rod for software
- Sleek design with rounded frame legs for safety
- 125mm/5'' retractable castors for safety and mobility
- Reliable TiMOTION motor
- Height range from 65-102cm/25.6''-40.2'' in approx 30 seconds
- Padding thickness 7cm/3''
- Foam Density: 36kg/m3(79.41bs/m3)
- Warranty: 5 Years Construction, 3 Years Electrics
- Upholstery: PVC vinyl that is fire retardant and meet the requirement of BS 5852, stain, mildew, and wear resistance 150,000 times
- Qualification: ISO13485/ Passed MDR CE certification / Registered with the FDA in the United States
- Weight Capacity: 220kgs/485lbs

ELECTRIC GYNAECOLOGY TABLE-CONFYCARE

Our premium gynaecology table provides for electric positioning of height & tilt through a foot switch ensuring practitioner comfort.
This table has been designed with an additional headrest section transforming to a full length table for most general examinations and minor treatments.

Technical data

Angle of head section	Angle of back section	Angle of seat section	Product weight	Volume	Packing size
-30°~ +75°	0°~ +70°	0°~ +20°	88kgs	0.89m3	189x74x64cm
-30°~ +75°	0°~ +70°	0°~ +20°	194 lbs	0.89m3	74.4"x29.1"x25.2"

Product model

BASE | EL3605

LxWxH	185x70x(59-104)cm 72.8"x27.5"x23.2"-40.9"
Control mode	motor
Height adjustment	foot switch
Adjustable foot bar	360°
Lifting speed	30s
Down speed	30s

Product details

FEATURES

- Electric Hi-Lo & tilt operation by handset
- Tilt angle inclinator included
- Activity tray & patient straps included
- Head section has face hole and plug
- Sleek design with rounded frame legs for safety
- Ground brake for uneven surfaces 125mm/5" retractable castors for safety and mobility
- Reliable TiMOTION motor
- Height range from 57-104cm/22.4"-41"in approx 30 seconds
- Padding thickness 5cm/2"
- Foam density: 36kg/m3 (79.4lbs/m3)
- Upholstery: PVC vinyl that is fire retardant and meet the requirement of BS 5852, stain, mildew, and wear resistance 150,000 times
- Warranty: 5 Years Construction, 3 Years Electrics
- Qualification: ISO13485/ Passed MDR CE certification / Registered with the FDA in the United States
- Weight Capacity: 220kg/485lbs

GYNAECOLOGY TABLE -CONFYCARE.

Our tilt table offers a simple out of the box solution for physiotherapists and in home care patients alike. This two section tilt table including patient straps, activity tray and individually adjustable foot plates will suit the most demanding rehabilitation regime and perform for the long term.

Technical data

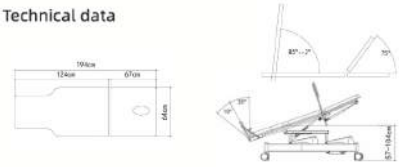

Angle of back section	Angle of hiting	Angle of footrest	Wheel	Product weight	Packing size
0°~ +75°	-2°~ +85°	-10°~ +20°	ϕ125mm	110kgs	208x90x64cm
0°~ +75°	-2°~ +85°	-10°~ +20°	ϕ5"	243lbs	82"x35.4"x25.2"

Product details

Product model

BASE | EL12

LxWxH	194x64x(57-104)cm 76.4"x25.2"x22.4"-41"
Control mode	motor
Height adjustment	handset
Lifting speed	30s
Down speed	30s

FEATURES

- Electric Hi-Lo & tilt operation by handset
- Tilt angle inclinator included
- Activity tray & patient straps included
- Head section has face hole and plug
- Sleek design with rounded frame legs for safety
- Ground brake for uneven surfaces 125mm/5" retractable castors for safety and mobility
- Reliable TiMOTION motor
- Height range from 57-104cm/22.4"-41"in approx 30 seconds
- Padding thickness 5cm/2"
- Foam density: 36kg/m3 (79.4lbs/m3)
- Upholstery: PVC vinyl that is fire retardant and meet the requirement of BS 5852, stain, mildew, and wear resistance 150,000 times
- Warranty: 5 Years Construction, 3 Years Electrics
- Qualification: ISO13485/ Passed MDR CE certification / Registered with the FDA in the United States
- Weight Capacity: 220kg/485lbs

ELECTRIC TREATMENT TABLE 3 SECTION-CONFYCARE

Designed for clinical use in physical therapy and general medicine, it enables precise patient positioning while minimizing practitioner strain.

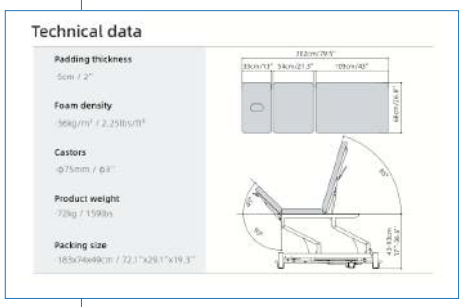

Technical data

Padding thickness
5cm / 2"

Foam density
36kg/m³ / 2.25lbs/ft³

Castors
Φ75mm / Φ3"

Product weight
72kg / 159lbs

Packing size
185x74x49cm / 72.1"x29.1"x19.3"

FEATURES

Key product features:

- ADA-compliant low-height table, 43cm/17'' in height for accessibility
- Electric Hi-Lo operation controlled by foot bar
- Head and leg section offer multi-angle adjustment, perfect for medical center use
- Closed base frame design for easy cleaning and maintenance

- Overall Dimensions: Length 202cm/79.5'', Width 68cm/26.8''
- Height Adjustment: From 43cm/17'' to 93cm/36.6''
- Head section: –90° to +45° by gas spring controlled
- Leg section: 0° to +85° by gas spring controlled
- Motor: Equipped with a premium-quality TIMOTION motor for smooth operation
- Breathing Hole: Welded and taped seams with plug included
- Upholstery Foam: 5cm/2'' thickness with a density of 36kg/m3 (2.25lbs/ft3)
- Vinyl: Fire-retardant PVC vinyl (BS 5852 compliant, 150,000 abrasion cycles)
- Castor System: One lever controls four retractable castors (Ø75mm/3'')
- Mains Supply: 100–240V AC, 50/60 Hz, Class II
- Weight Capacity: 250kg/551lbs, optional: 280kg/617lbs Warranty: 5 years
- Certifications: ISO13485, CE, UKCA, TGA, FDA approved

Fully closed metal base

360° adjustable foot bar

Head hole and plug

75mm/3'' silent castors

Product model PRO SERIES

Product Name
EL03PRO23

Control mode	Motor
Height adjustment	Foot bar
Adjustable foot bar	360°
Lifting/Down speed	30s
LxWxH	202x68x(43-93)cm 79.5"x26.8"x(17"-36.6")

Product Name
EL03PRO29

Control mode	Hydraulic
Height adjustment	Foot pedal
Adjustable foot pedal	Both side of table
Lifting/Down speed	12s
LxWxH	202x68x(43-93)cm 79.5"x26.8"x(17"-36.6")

Product Name
EL03PRO37

Control mode	High-speed motor
Height adjustment	Foot bar
Adjustable foot bar	360°
Lifting/Down speed	20s
LxWxH	202x68x(43-93)cm 79.5"x26.8"x(17"-36.6")

ELECTRIC PODIATRY CHAIR-CONFYCARE

A versatile podiatry and multipurpose treatment chair. This strong chair includes many features such as nose hole and plug,flip up armrests & a debris tray to suit the many disciplines of the healthcare and beauty industry.

Technical data

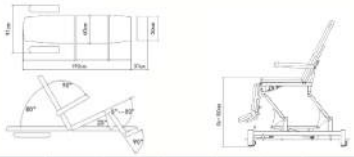

Angle of back section	Seat angle	Angle of leg section	Angle of foot section	Product weight	Volume	Packing size
0°~ +80°	0°~ +25°	-80°~ +5°	0°~ +90°	74kgs	0.76m3	184x68x60cm
0°~ +80°	0°~ +25°	-80°~ +5°	0°~ +90°	163lbs	0.76m3	72.4"x26.8"x23.6"

Product details

Product model

BASE | EL35

LxWxH	190x60x(56-100)cm 74.8"x23.6"x22"-39.4"
Control mode	motor
Height adjustment	foot switch
Lifting speed	30s
Down speed	30s

✪ FEATURES

- Electric Hi-Lo operation and seat tilt operation by foot switch
- Sleek design with rounded frame legs for safety
- Comfortable flip up armrests
- Padded adjustable foot section
- Head section has face hole and head section plug
- Debris tray included
- Adjustable feet for uneven surfaces
- 75mm/3'' retractable castors for safety and mobility
- Reliable TiMOTION motor
- Height range from 56cm to 100cm/22''-39.4'' in approx 30 seconds
- Padding thickness 5cm/2''
- Foam Density: 36kg/m3(79.41bs/m3)
- Warranty: 5 Years Construction, 3 Years Electrics
- Upholstery: PVC vinyl that is fire retardant and meet the requirement of BS 5852, stain, mildew, and wear resistance 150,000 times
- Qualification: ISO13485/ Passed MDR CE certification / Registered with the FDA in the United States
- Weight Capacity: 250kgs/551lbs

ELECTRIC TREATMENT TABLE-CONFYCARE

This table features dual gas struts and smooth height adjustment—great value and a top choice for medical centers for years.

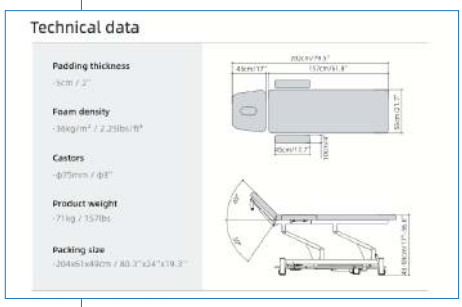

Technical data

Padding thickness
-5cm / 2"

Foam density
-36kg/m³ / 2.25lbs/ft³

Castors
-ϕ75mm / ϕ3"

Product weight
-71kg / 157lbs

Packing size
-204x61x49cm / 80.3"x24"x19.3"

FEATURES

Key product features:

- **ADA-compliant low-height table, 43cm/17'' in height for accessibility**
- **Electric Hi-Lo operation controlled by foot bar**
- **Narrow 55cm/21.7'' wide cushion with side armrest**
- **Closed base frame design for easy cleaning and maintenance**

- Overall Dimensions: Length 202cm/79.5'', Width 55cm/21.7''
- Height Adjustment: From 43cm/17'' to 93cm/36.6''
- Head section: –50° to +45° by gas spring controlled
- Motor: Equipped with a premium-quality TIMOTION motor for smooth operation
- Breathing Hole: Welded and taped seams with plug included
- Upholstery Foam: 5cm/2'' thickness with a density of 36kg/m3 (2.25lbs/ft3)
- Vinyl: Fire-retardant PVC vinyl (BS 5852 compliant, 150,000 abrasion cycles)
- Castor System: One lever controls four retractable castors (Ø75mm/3'')
  Mains Supply: 100–240V AC, 50/60 Hz, Class II
- Weight Capacity: 250kg/551lbs, optional: 280kg/617lbs
- Warranty: 5 years
- Certifications: ISO13485, CE, UKCA, TGA, FDA approved

Fully closed metal base

360° adjustable foot bar

Padded side armrests

75mm/3'' silent castors

Product model PRO SERIES

Product Name
EL022ARPRO23

Control mode	Motor
Height adjustment	Foot bar
Adjustable foot bar	360°
Lifting/Down speed	30s
LxWxH	202x55x(43-93)cm 79.5"x21.7"x(17"-36.6")

Product Name
EL022ARPRO29

Control mode	Hydraulic
Height adjustment	Foot pedal
Adjustable foot pedal	Both side of table
Lifting/Down speed	12s
LxWxH	202x55x(43-93)cm 79.5"x21.7"x(17"-36.6")

Product Name
EL022ARPRO37

Control mode	High-speed motor
Height adjustment	Foot bar
Adjustable foot bar	360°
Lifting/Down speed	20s
LxWxH	202x55x(43-93)cm 79.5"x21.7"x(17"-36.6")

ELECTRIC MAT TABLE-CONFYCARE

This Hi-Lo Power Mat Therapy Table is a robust treatment table designed to make physical therapies and examinations safe and comfortable for patients of any size.

Technical data

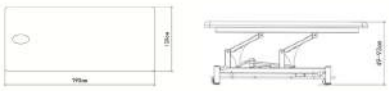

Padding thickness	Foam density	Wheel	Product weight	Packing size
5cm	36kg/m3	ϕ75mm	96kgs	195x125x53cm
2"	79.4lbs/m3	ϕ3"	212lbs	76.8"x49"x21"

Product model

BASE | EL01W

LxWxH	190x120x49-93cm 74.8"x47"x19.3"-36.6"
Control mode	motor
Height adjustment	foot bar
Adjustable foot bar	360°
Lifting speed	30s
Down speed	30s

FEATURES

- Electric Hi-Lo operation by foot bar
- Sleek design with rounded frame legs for safety
- Head section has one face hole and plug
- Super wide table top 120cm/47.2"
- Adjustable feet for uneven surfaces
- 75mm/3"castors for safety and mobility
- Reliable TiMOTION motor
- Height range from 49-93cm/19.3-36.6" in approx 30 seconds
- Padding thickness 5cm/2"
- Foam Density: 36kg/m3 (79.4lbs/m3)
- Warranty: 5 Years Construction, 3 Years Electrics
- Upholstery: PVC vinyl that is fire retardant and meet the requirement of BS 5852, stain, mildew, and wear resistance 150,000 times
- Qualification: ISO13485/ Passed MDR CE certification / Registered with the FDA in the United States Weight Capacity: 250kgs/551lbs

ELECTRIC TILT TABLE-CONFYCARE

Electric Tilt Table mainly used in the nervous system out of control caused by weakness, pain, spasm of patients, auxiliary training to rehabilitation purposes.

Technical data

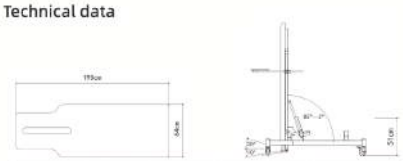

Angle of tilting	Angle of footrest	Wheel	Product weight	Volume	Packing size
-2°~ +85°	-10°~ +20°	ϕ125mm	87kgs	0.69m3	162x82x51cm
-2°~ +85°	-10°~ +20°	ϕ5"	191.8lbs	0.69m3	67.8"x32.3"x20"

✪ FEATURES

- Electric tilt operation by handset
- Tilt angle inclinator included
- Activity tray & patient straps included
- Sleek design with rounded frame legs for safety
- 125mm/5'' retractable castors for safety and mobility
- Accessories: adjustable belts (3pcs), adjustable foot plate, adjustable active table
- Reliable TiMOTION motor
- Padding thickness 5cm/2''
- Foam Density: 36kg/m3(79.41lbs/m3)
- Upholstery: PVC vinyl that is fire retardant and meet the requirement of BS 5852, stain, mildew, and wear resistance 150,000 times
- Warranty: 5 Years Construction, 3 Years Electrics
- Qualification: ISO13485/ Passed MDR CE certification / Registered with the FDA in the United States
- Weight Capacity: 220kg/485lbs

Product model

BASE | EL12D

LxWxH	190x64x51cm 74.8"x25.2"x20.1"
Control mode	motor
Height adjustment	handset
Lifting speed	30s
Down speed	30s

EQUAL 3 SECTION ELECTRIC TREATMENT TABLE-CONFYCARE

This table features dual gas struts and smooth height adjustment—great value and a top choice for medical centers for years.

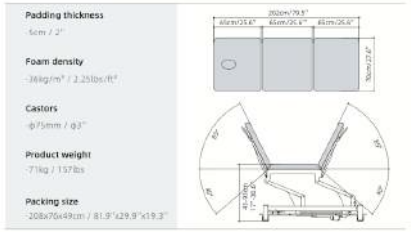

Technical data

Padding thickness
- 5cm / 2"

Foam density
- 36kg/m³ / 2.25lbs/ft³

Castors
- ϕ75mm / ϕ3"

Product weight
- 71kg / 157lbs

Packing size
- 208x76x49cm / 81.9"x29.9"x19.3"

✪ FEATURES

Key product features:

- ADA-compliant low-height table, 43cm/17'' in height for accessibility
- Electric Hi-Lo operation controlled by foot bar
- Head and leg section offer multi-angle adjustment, perfect for medical center use
- Closed base frame design for easy cleaning and maintenance

- Overall Dimensions: Length 202cm/79.5'', Width 70cm/27.6''
- Height Adjustment: From 43cm/17'' to 93cm/36.6''
- Head/Leg section: –40° to +85° by gas spring controlled
- Motor: Equipped with a premium-quality TIMOTION motor for smooth operation Breathing Hole: Welded and taped seams with plug included
- Upholstery Foam: 5cm/2'' thickness with a density of 36kg/m3 (2.25lbs/ft3) Vinyl: Fire-retardant PVC vinyl (BS 5852 compliant, 150,000 abrasion cycles) Castor System: One lever controls four retractable castors (Ø75mm/3'') Mains Supply: 100–240V AC, 50/60 Hz, Class II
- Weight Capacity: 250kg/551lbs, optional: 280kg/617lbs Warranty: 5 years
- Certifications: ISO13485, CE, UKCA, TGA, FDA approved

Fully closed metal base

360° adjustable foot bar

Head hole and plug

75mm/3'' silent castors

Product model PRO SERIES

Product Name
EL03EPRO23

Control mode	**Motor**
Height adjustment	Foot bar
Adjustable foot bar	360°
Lifting/Down speed	30s
LxWxH	202x70x(43-93)cm 79.5"x27.6"x(17"-36.6")

Product Name
EL03EPRO29

Control mode	**Hydraulic**
Height adjustment	Foot pedal
Adjustable foot pedal	Both side of table
Lifting/Down speed	12s
LxWxH	202x68x(43-93)cm 79.5"x27.6"x(17"-36.6")

Product Name
EL03EPRO37

Control mode	**High-speed motor**
Height adjustment	Foot bar
Adjustable foot bar	360°
Lifting/Down speed	20s
LxWxH	202x68x(43-93)cm 79.5"x27.6"x(17"-36.6")

FREE STANDING TREATMENT TABLE-CONFYCARE

FREE STANDING TREATMENT TABLE

Product model

FIX-MT1

LxWxH	185×70×70cm 72.8" x27.6" x27.6"
Weight	39kg/86lbs
Frame material	Steel with powder coated
Weight capacity	220kg/485lbs
Foam thickness	5cm/2"

FREE STANDING TREATMENT TABLE

FIX-MT2

LxWxH	195×70×70cm 76.8" x27.6" x27.6"
Weight	36kg/79lbs
Frame material	Steel with powder coated
Weight capacity	220kg/485lbs
Foam thickness	5cm/2"
Angle of backrest	0~ +75°

FIXED EXAMINATION TABLE

Product model

FIX-MT4

LxWxH	185×65×67cm 72.8"x26"x26.4"
Weight	30kg/66lbs
Frame material	Steel with powder coated
Weight capacity	220kg/485lbs
Foam thickness	5cm/2"

ALUMINUM PORTABLE MASSAGE TABLE

CFAL04F

LxWxH	185×70×(63-84)cm 76.8"x27.6"x(24.8"-33")
Weight	36kg/79lbs
Frame material	Aluminum
Weight capacity	220kg/485lbs
Foam thickness	5cm/2"
Folded size	93×71×22cm 36.6"x28"x8.7"

SPECIAL NEED CHANGE TABLE-CONFYACARE

Designed for use in schools and homes to assist with changing disabled individuals.

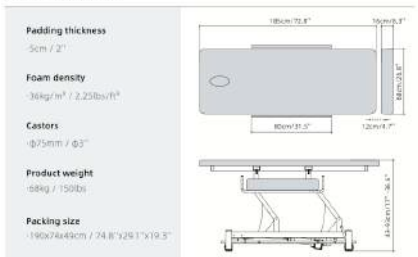

Technical data

Padding thickness
5cm / 2"

Foam density
36kg/m³ / 2.25lbs/ft³

Castors
Φ75mm / Φ3"

Product weight
68kg / 150lbs

Packing size
190x74x49cm / 74.8"x29.1"x19.3"

✪ FEATURES

Key product features:

- **ADA-compliant low-height table, 43cm/17'' in height for accessibility**
- **Electric Hi-Lo operation controlled by foot bar**
- **Removable padded side rails for added safety**
- **Closed base frame design for easy cleaning and maintenance**

- Overall Dimensions: Length 185cm/72.8'', Width 68cm/26.8''
- Height Adjustment: From 43cm/17'' to 93cm/36.6''
- Motor: Equipped with a premium-quality TIMOTION motor for smooth operation Breathing Hole: Welded and taped seams with plug included
- Upholstery Foam: 5cm/2'' thickness with a density of 36kg/m3 (2.25lbs/ft3) Vinyl: Fire-retardant PVC vinyl (BS 5852 compliant, 150,000 abrasion cycles) Castor System: One lever controls four retractable castors (Ø75mm/3'')
- Mains Supply: 100–240V AC, 50/60 Hz, Class II
- Weight Capacity: 250kg/551lbs, optional: 280kg/617lbs
- Warranty: 5 years
- Certifications: ISO13485, CE, UKCA, TGA, FDA approved
- Certifications: ISO13485, CE, UKCA, TGA, FDA approved

Fully closed metal base

Padded side rails

360° adjustable foot bar

75mm/3'' silent castors

Product model PRO SERIES

Product Name
EL01PRO23

Control mode	**Motor**
Height adjustment	Foot bar
Adjustable foot bar	360°
Lifting/Down speed	30s
LxWxH	(185-201)x68x(43-93)cm 72.8"-79.1")x26.8"x(17"-36.6")

Product Name
EL01PRO29

Control mode	**Hydraulic**
Height adjustment	Foot pedal
Adjustable foot pedal	Both side of table
Lifting/Down speed	12s
LxWxH	(185-201)x68x(43-93)cm 72.8"-79.1")x26.8"x(17"-36.6")

Product Name
EL01PRO37

Control mode	**High-speed motor**
Height adjustment	Foot bar
Adjustable foot bar	360°
Lifting/Down speed	20s
LxWxH	(185-201)x68x(43-93)cm 72.8"-79.1")x26.8"x(17"-36.6")

STAINLESS STEEL SINGLE STEP–CONFYCARE

STAINLESS STEEL SINGLE STEP

Product model

SST

LxWxH	40×27×20cm 15.8" x10.6" x7.9"
Frame material	Stainless steel frame ϕ1" steel tubing
Platform	MDF board + Non-slip ribbed rubber platform
Feet	Reinforced rubber tips
Weight capacity	150kg/330lbs
Weight	2.65kg/5.8lbs
Packing size	42×32×8cm 16.5" x12.6 "x3.2"

STAINLESS STEEL DOUBLE STEP

DST

LxWxH	40×57.5×47cm 15.8" x22.6" x18.5"
Frame material	Stainless steel frame ϕ1" steel tubing
Platform	MDF board + Non-slip ribbed rubber platform
Feet	Reinforced rubber tips
First step height	16cm/6.3"
Second step height	34cm/13.4"
Weight capacity	150kg/330lbs
Weight	5.2kg/11.5lbs
Packing size	61×49.5×13cm 24" x19.5" x5.1"

ELECTRIC OPHTHALMIC ENT OPERATING TABLE-CONFYCARE

This Ophthalmic Table can be used as pedicure chair, eye examination table and so on. It's a multifunctional physiotherapy chair and suitable for a wide range of treatment & other therapy.

Technical data

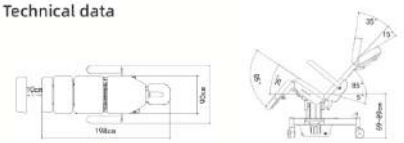

Angle of head section	Angle of back section	Angle of seat section	Angle of leg section	Product weight	Packing size
-15°~ +35°	-5°~ +85°	0°~ +35°	0°~ +85°	111kgs	162x74x67cm
-15°~ +35°	-5°~ +85°	0°~ +35°	0°~ +85°	245lbs	63.8"x29.1"x26.4"

✪ FEATURES

- Electric Hi-Lo and angle operation by handset
- Luxurious soft and comfortable head section
- Contoured comfortable table top and flip up armrests
- Debris tray included
- Sleek design with rounded frame legs for safety
- Removable padded wing armrests
- 125mm/5'' castors for safety and mobility
- Reliable column motor
- Height range from 59-89cm/23.2''-38.6'' in approx 20 seconds
- Padding thickness 75mm/3''
- Foam Density: 36kg/m3(79.41lbs/m3)
- Warranty: 5 Years Construction, 3 Years Electrics
- Upholstery: PVC vinyl that is fire retardant and meet the requirement of BS 5852, stain, mildew, and wear resistance 150,000 times
- Qualification: ISO13485/ Passed MDR CE certification / Registered with the FDA in the United States
- Weight Capacity: 250kgs/551lbs

Product model

BASE | ELT35

LxWxH	198x60x(59-98)cm 78"x23.6"x23.2"-38.6"
Control mode	motor
Height adjustment	handset
Lifting speed	20s
Down speed	20s

ELECTRIC TREATMENT TABLE WITH ADJUSTABLE BACK SECTIO-CONFYCARE

This table features an adjustable back section, designed to enhance treatment and examination versatility.

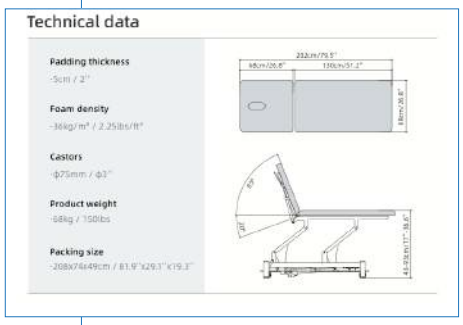

Technical data

Padding thickness
-5cm / 2''

Foam density
-36kg/m³ / 2.25lbs/ft³

Castors
-φ75mm / φ3''

Product weight
-68kg / 150lbs

Packing size
-208x74x49cm / 81.9''x29.1''x19.3''

✪ FEATURES

Key product features:

- ADA-compliant low-height table, 43cm/17'' in height for accessibility
- Electric Hi-Lo operation controlled by foot bar
- Adjustable back section range from -20° to +85°
- Closed base frame design for easy cleaning and maintenance

- Overall Dimensions: Length 202cm/79.5'', Width 68cm/26.8''
- Height Adjustment: From 43cm/17'' to 93cm/36.6''
- Back section: –20° to +85° optional: 0° to +85° by gas spring controlled
- Motor: Equipped with a premium-quality TIMOTION motor for smooth operation
- Breathing Hole: Welded and taped seams with plug included
- Upholstery Foam: 5cm/2'' thickness with a density of 36kg/m3 (2.25lbs/ft3)
- Vinyl: Fire-retardant PVC vinyl (BS 5852 compliant, 150,000 abrasion cycles)
- Castor System: One lever controls four retractable castors (Ø75mm/3'')
- Mains Supply: 100–240V AC, 50/60 Hz, Class II
- Weight Capacity: 250kg/551lbs, optional: 280kg/617lbs
- Warranty: 5 years
- Certifications: ISO13485, CE, UKCA, TGA, FDA approved

Fully closed metal base

360° adjustable foot bar

Adjustable feet

75mm/3'' silent castors

Product model PRO SERIES

Product Name
EL02PRO23

Control mode	Motor
Height adjustment	Foot bar
Adjustable foot bar	360°
Lifting/Down speed	30s
LxWxH	202x68x(43-93)cm 79.5"x26.8"x(17"-36.6")

Product Name
EL02PRO29

Control mode	Hydraulic
Height adjustment	Foot pedal
Adjustable foot pedal	Both side of table
Lifting/Down speed	12s
LxWxH	202x68x(43-93)cm 79.5"x26.8"x(17"-36.6")

Product Name
EL02PRO37

Control mode	High-speed motor
Height adjustment	Foot bar
Adjustable foot bar	360°
Lifting/Down speed	20s
LxWxH	202x68x(43-93)cm 79.5"x26.8"x(17"-36.6")

MULTI-USE IMAGING POWER TABLE WITH 3-SECTION TOP-CONFYCARE

This table is built for the ultrasound work environment. The table provides easier access for cardiac exams, GYN exams, upper extremity vascular exams and interventional procedures.

Technical data

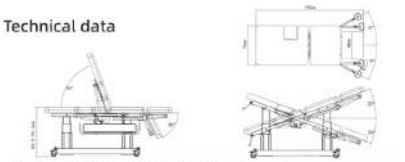

Angle of back section	Angle of leg section	Angle of Trendelenburg	Angle of reverse Trendelenburg	Product weight	Volume	Packing size
0°~ +80°	0°~ +80°	-20°~ 0°	0°~ +20°	110kgs	1m3	176x78x73cm
0°~ +80°	0°~ +80°	-20°~ 0°	0°~ +20°	242.5lbs	1m3	69.3"x30.7"x28.7"

✪ FEATURES

- Electric Hi-lo operation by handset, easy to use
- Three-piece top with electric adjustable height, back section, leg section, Trendelenburg& Reverse Trendelenburg, pneumatic adjustable foot section
- Unobstructed base design. All-welded base and top frame
- Trendelenburg/Reverse Trendelenburg plus or minus 20°
- Reliable 2pcs cloumn motors.Dual column lift system adds rigidity
- 75mm/3'' heavy duty locking casters. Each caster has a brake system
- Reliable column motor
- Height range from 54-94cm/21.3''-37'' in approx 30 seconds
- Hi-lo without load in approx 16 seconds. Hi-lo with 250KGS/550LBS in 27s for higher and 15s for lower
- Option choice of safety rails/stirrups/paper roll holder/paper cutter/Safety Straps
- Warranty: 5 Years Construction, 3 Years Electrics
- Upholstery: PVC vinyl that is fire retardant and meet the requirement of BS 5852, stain, mildew, and wear resistance 150,000 times
- Qualification: ISO13485/ Passed MDR CE certification / Registered with the FDA in the United States
- Weight Capacity: 250kgs/551lbs

Product model

BASE | ELT300SD

LxWxH	195x70x(54-94)cm 76.8"x27.6"x21.3"-37"
Control mode	motor
Height adjustment	handset
Lifting speed	30s
Down speed	30s

MULTI-USE IMAGING POWER TABLE WITH 2 SECTION TOP

This table is built for the ultrasound work environment. The table provides easier access for cardiac exams, GYN exams, upper extremity vascular exams and interventional procedures.

Technical data

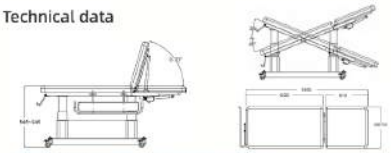

Angle of back section	Angle of Trendelenburg	Angle of reverse Trendelenburg	Product weight	Volume	Packing size
0°~ +80°	-20°~ 0°	0°~ +20°	110kgs	1m3	176x78x73cm
0°~ +80°	-20°~ 0°	0°~ +20°	242.5lbs	1m3	69.3"x30.7"x28.7"

FEATURES

- Electric Hi-lo operation by handset, easy to use
- Two-piece top with electric adjustable height, back section, Trendelenburg& Reverse Trendelenburg, pneumatic adjustable foot section
- Unobstructed base design. All-welded base and top frame
- Trendelenburg/Reverse Trendelenburg plus or minus 20°
- Reliable 2pcs cloumn motors.Dual column lift system adds rigidity
- 75mm/3'' heavy duty locking casters. Each caster has a brake system
- Reliable column motor
- Height range from 54-94cm/21.3''-37'' in approx 30 seconds
- Hi-lo without load in approx 16s. Hi-lo with 250KGS/550LBS in 27s for higher and 15s for lower
- Option choice of safety rails/stirrups/paper roll holder/paper cutter/Safety Straps
- Warranty: 5 Years Construction, 3 Years Electrics
- Upholstery: PVC vinyl that is fire retardant and meet the requirement of BS 5852, stain, mildew, and wear resistance 150,000 times
- Qualification: ISO13485/ Passed MDR CE certification / Registered with the FDA in the United States
- Weight Capacity: 250kgs/551lbs

Product model

BASE | ELT200

LxWxH	195x60/70x(54-94)cm 76.8"x23.6"/27.6"x21.3"-37"
Control mode	motor
Height adjustment	handset
Lifting speed	30s
Down speed	30s

SECTION ELECTRIC TREATMENT TABLE CY-C107F -CHAOYANG MEDICAL

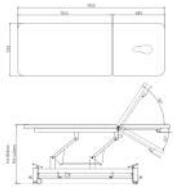

✪ FEATURES

Size: L1950*W700*H460-890mm

Description

1. Back part adjusted by double gas strut
2. Four retractable medical grade castors
3. Four large pad levelling feet
4. Medical grade PVC vinyl:fireproof,waterproof, stain, mildew, oil and wear resistant

Function:

1. Adjustable height:460-890mm
2. Adjustable back :78° to -32°
3. Adjustable height by 1pc actuator with foot bar system
4. Weight capacity:250kg

SECTION ELECTRIC TREATMENT TABLE CY-C107S -CHAOYANG MEDICAL

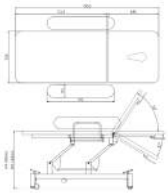

✪ FEATURES

Size: L1950*W700*H460-890mm

Description

1. Back part adjusted by double gas strut
2. Four retractable medical grade castors
3. Four large pad levelling feet
4. Medical grade PVC vinyl: fireproof, waterproof, stain, mildew, oil and wear resistant
5. 1 pair luxury siderail

Function:

1. Adjustable height:460-890mm
2. Adjustable back : 78° to -32°
3. Adjustable height by 1pc actuator with foot switch
4. Weight capacity:250kg

SECTION ELECTRIC TREATMENT TABLE CY-C107 -CHAOYANG MEDICAL

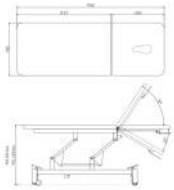

✪ FEATURES

Size: L1950*W700*H460-890mm

Description

1. Back part adjusted by double gas strut
2. Four retractable medical grade castors
3. Four large pad levelling feet
4. Medical grade PVC vinyl: fireproof, waterproof, stain, mildew, oil and wear resistant

Function:

1. Adjustable height:460-890mm
2. Adjustable back : 78° to -32°
3. Adjustable height by 1pc actuator with foot switch
4. Weight capacity:250kg

ACTUATORS 3 SECTION ELECTRIC TREATMENT TABLE CY-C108A-CHAOYANG MEDICAL

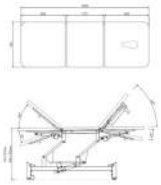

✪ FEATURES

Size: L1980*W700*H490-920mm

Description

1. Back, foot and height adjusted by actuators
2. Four retractable medical grade castors
3. Four large pad levelling feet
4. Medical grade PVC vinyl: fireproof, waterproof, stain, mildew, oil and wear resistant

Function:

1. Adjustable height:490-920mm
2. Adjustable back :60° to -20°
3. Adjustable foot:68°to -30°
4. 3pc actuator with foot switch or hand set
5. Weight capacity:250kg

ACTUATORS 3 SECTION ELECTRIC TREATMENT TABLE CY-C108E3

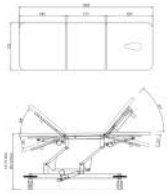

✪ FEATURES

Size: L1980*W700*H510-940mm

Description

1. Back and height and foot adjusted by actuators
2. Four retractable medical grade centrol locking castors
3. Medical grade PVC vinyl: fireproof, waterproof, stain, mildew, oil and wear resistant

Function:

1. Adjustable height:510-940mm
2. Adjustable back :60° to -20°
3. Adjustable foot:68°to -30°
4. 3pc actuator with foot switch or hand set
5. Weight capacity:250kg

ACTUATORS 3 SECTION ULTRASOUND ELECTRIC TREATMENT TABLE CY-C108C AND D -CHAOYANG MEDICAL

3 Actuators 3 Section ultrasound electric treatment table CY-C108C

3 Actuators 3 Section ultrasound electric treatment table CY-C108D

✪ FEATURES

Size: L1980*W700*H490-920mm

Description

1. Back, foot and height adjusted by actuators
2. Four retractable medical grade castors
3. Four large pad levelling feet
4. Adjustable ultrasound support holder by gas strut
5. Medical grade PVC vinyl: fireproof, waterproof, stain, mildew, oil and wear resistant

Function:

1. Adjustable height:490-920mm
2. Adjustable back :60° to -28°
3. Adjustable foot:68° to -30°
4. 3pc actuator with foot switch or hand set
5. Weight capacity:250kg

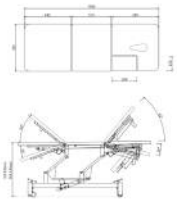

SECTION ELECTRIC TREATMENT TABLE CY-C108

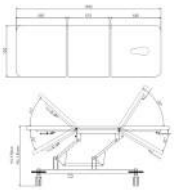

✪ FEATURES

Size: L1980*W700*H460-890mm

Description

1. Back and foot parts adjusted by double gas strut
2. Four retractable medical grade castors
3. Four large pad levelling feet
4. Medical grade PVC vinyl:fireproof,waterproof, stain, mildew, oil and wear resistant

Function:

1. Adjustable height:460-890mm
2. Adjustable back : 78° to -32°
3. Adjustable foot:45° to -25°
4. Adjustable height by 1pc actuator with foot switch
5. Weight capacity:250kg

SECTION ELECTRIC TREATMENT TABLE CY-C108B -CHAOYANG MEDICAL

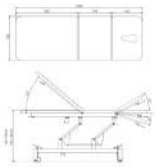

✪ FEATURES

Size: L1980*W700*H480-910mm

Description

1. Back and foot parts adjusted by double gas strut
2. Four retractable medical grade castors
3. Four large pad levelling feet
4. Medical grade PVC vinyl:fireproof, waterproof, stain, mildew, oil and wear resistant

Function:

1. Adjustable height:480-910mm
2. Adjustable back:57° to -50°
3. Adjustable foot:0° to 70°
4. Adjustable height by 1pc actuator with foot switch
5. Weight capacity:250kg

SECTION ELECTRIC TREATMENT TABLE CY-C108E -CHAOYANG MEDICAL

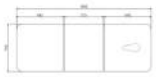

✪ FEATURES

Size: L1980*W700*H480-910mm

Description

1. Back and foot parts adjusted by dobule gas strut
2. Four retractable medical grade centrol locking castors
3. Medical grade PVC vinyl: fireproof, waterproof, stain, mildew, oil and wear resistant

Function:

1. Adjustable height:480-910mm
2. Adjustable back :78° to -32°
3. Adjustable foot:45° to -25°
4. 1pc actuator with foot switch adjustable height
5. Weight capacity:250kg

SECTION ELECTRIC TREATMENT TABLE CY-C108F

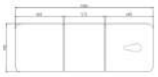

✪ FEATURES

Size: L1980*W700*H460-890mm

Description

1. Back and foot parts adjusted by double gas strut
2. Four retractable medical grade castors
3. Four large pad levelling feet
4. Medical grade PVC vinyl: fireproof, waterproof, stain, mildew, oil and wear resistant

Function:

1. Adjustable height:460-890mm
2. Adjustable back :78° to -32°
3. Adjustable foot:45° to -25°
4. Adjustable height by 1pc actuator with foot bar system
5. Weight capacity:250kg

SECTION ELECTRIC TREATMENT TABLE CY-C108S -CHAOYANG MEDICAL

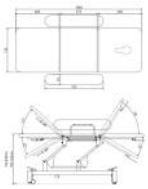

✪ FEATURES

Size:L1980*W700*H460-890mm

Description

1. Back and foot parts adjusted by double gas strut
2. Four retractable medical grade castors
3. Four large pad levelling feet
4. 1 pair luxury siderail
5. Medical grade PVC vinyl: fireproof, waterproof, stain, mildew, oil and wear resistant

Function:

1. Adjustable height:460-890mm
2. Adjustable back :78° to -32°
3. Adjustable foot:45° to -25°
4. Adjustable height by 1pc actuator with foot switch
5. Weight capacity:250kg

SECTION HYDRAULIC TREATMENT TABLE CY-C107H -CHAOYANG MEDICAL

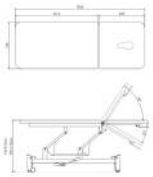

✪ FEATURES

Size:L1950*W700*H470-870mm

Description

1. Back part adjusted by double gas strut
2. Four retractable medical grade castors
3. Four large pad levelling feet
4. Medical grade PVC vinyl:fireproof, waterproof, stain, mildew, oil and wear resistant

Function:

1. Adjustable height:470-870mm
2. Adjustable back : 78° to -32°
3. Adjustable height by 1 set imported hydraulic pump
4. Weight capacity:230kg

SECTION HYDRAULIC TREATMENT TABLE CY-C108H -CHAOYANG MEDICAL

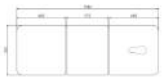

✪ FEATURES

Size:L1980*W700*H470-870mm

Description

1. Back and foot parts adjusted by double gas strut
2. Four retractable medical grade castors
3. Four large pad levelling feet
4. Medical grade PVC vinyl:fireproof, waterproof, stain, mildew, oil and wear resistant

Function:

1. Adjustable height:470-870mm
2. Adjustable back : 78° to -32°
3. Adjustable foot:45° to -25°
4. Adjustable height by 1pc imported hydraulic pump
5. Weight capacity:230kg

SECTION MULTIFUCTION ELECTRIC TREATMENT TABLE CY-C115F-CHAOYANG MEDICAL

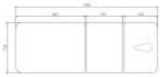

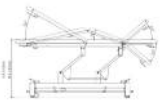

✪ FEATURES

Size:L1980*W700*H480-910mm

Description

1. Back and foot parts adjusted by double gas strut
2. Four retractable medical grade castors
3. Four large pad levelling feet
4. Medical grade PVC vinyl: fireproof, waterproof, stain, mildew, oil and wear resistant

Function:

1. Adjustable height:480-910mm by foot bar system
2. Adjustable back :65° to -50°
3. Adjustable foot:0° to 56°
4. Middle part adjustable:0 to 28°
5. Adjustable height and middle part by 2pc actuator
6. Weight capacity:250kg

SECTION MULTIFUCTION ELETRIC TREATMENT TABLE CY-C115AF -CHAOYANG MEDICAL

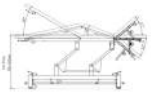

✪ FEATURES

Size:L1980*W700*H480-910mm

Description

1. Back and foot parts adjusted by double gas strut
2. Four retractable medical grade castors
3. Four large pad levelling feet
4. Medical grade PVC vinyl: fireproof, waterproof, stain, mildew, oil and wear resistant

Function:

1. Adjustable height:480-910mm by foot bar system
2. Adjustable back :57° to -52°
3. Adjustable foot:0° to 56°
4. Middle part adjustable:0 to 28°
5. Adjustable height and middle part by 2pc actuator
6. Weight capacity:250kg

SECTION ELECTRIC TRACTION BED CY-C101-CHAOYANG MEDICAL

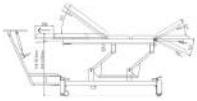

✪ FEATURES

Size:L2140*W700*H490-920mm

Description

1. Back and foot parts adjusted by dobule gas strut
2. Four retractable medical grade castors
3. Four large pad levelling feet
4. Medical grade PVC vinyl: fireproof, waterproof, stain, mildew, oil and wear resistant
5. 1pc flexion stool, 180°adjustable traction support

Function:

1. Adjustable height:490-920mm
2. Adjustable back :51° to -52°
3. Adjustable foot:0°to72°
4. Sliding distance of the bed is at least 28cm.
5. Adjustable height by 1pc actuator with foot switch
6. Weight capacity:230kg

SECTION ELECTRIC TRACTION BED CY-C101F-CHAOYANG MEDICAL

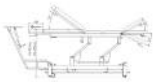

✪ FEATURES

Size:L2140*W700*H490-920mm

Description

1. Back and foot parts adjusted by double gas strut
2. Four retractable medical grade castors
3. Four large pad levelling feet
4. Medical grade PVC vinyl: fireproof, waterproof, stain, mildew, oil and wear resistant
5. 1pc flexion stool, 180° adjustable traction support

Function:

1. Adjustable height:490-920mm
2. Adjustable back :51° to -52°
3. Adjustable foot:0°to72°
4. Sliding distance of the bed is at least 28cm.
5. Adjustable height by 1pc actuator with foot bar system
6. Weight capacity:230kg

SECTION MULTIFUNCTION ELECTRIC TREATMENT TABLE CY-C115 -CHAOYANG MEDICAL

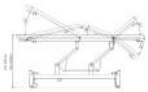

✪ FEATURES

Size:L1980*W700*H480-910mm

Description

1. Back and foot parts adjusted by double gas strut
2. Four retractable medical grade castors
3. Four large pad levelling feet
4. Medical grade PVC vinyl:fireproof,waterproof, stain, mildew, oil and wear resistant

Function:

1. Adjustable height:480-910mm
2. Adjustable back :65° to -50°
3. Adjustable foot:0° to 56°
4. Middle part adjustable:0 to 28°
5. Adjustable height and middle part by 2pc actuator with foot switch
6. Weight capacity:250kg

SECTION ELECTRIC TREATMENT TABLE CY-C103F-CHAOYANG MEDICAL

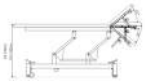

✪ FEATURES

Size: L1960*W700*H480-910mm

Description

1. Back part adjusted by double gas strut
2. Four retractable medical grade castors
3. Four large pad levelling feet
4. Medical grade PVC vinyl:fireproof, waterproof, stain, mildew, oil and wear resistant
5. Adjustable height of armrest

Function:

1. Adjustable height:480-910mm
2. Adjustable back : 45°to -30°
3. Adjustable height by 1pc actuator with foot bar system
4. Weight capacity:250kg

SECTION ELECTRIC TRACTION BED CY-C111A-CHAOYANG MEDICAL

✪ FEATURES

Size: L2140*W700*H490-920mm

Description

1. Back and foot parts adjusted by double gas strut
2. Four retractable medical grade castors
3. Four large pad levelling feet
4. Medical grade PVC vinyl:fireproof,waterproof, stain, mildew, oil and wear resistant
5. 1pc flexion stool,stainless steel traction support

Function:

1. Adjustable height:490-920mm
2. Adjustable back :51° to -52°
3. Adjustable foot:0°to72°
4. Sliding distance of the bed is at least 28cm.
5. Adjustable height by 1pc actuator with foot switch
6. Weight capacity:230kg

SECTION ELECTRIC TREATMEBT TABLE CY-C110 -CHAOYANG MEDICAL

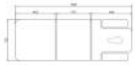

✪ FEATURES

Size: L1980*W700*H460-890mm

Description

1. Back and foot parts adjusted by double gas strut
2. Four retractable medical grade castors
3. Four large pad levelling feet
4. 2pcs adjustable height armrest
5. Medical grade PVC vinyl:fireproof, waterproof, stain, mildew, oil and wear resistant

Function:

1. Adjustable height:460-890mm
2. Adjustable back :67° to -45°
3. Adjustable foot:45° to -25°
4. Adjustable height by 1pc actuator with foot switch
5. Weight capacity:250kg

SECTION ELECTRIC TREATMENT TABLE CY-C110F -CHAOYANG MEDICAL

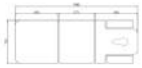

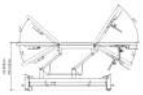

✪ FEATURES

Size: L1980*W700*H460-890mm

Description

1. Back and foot parts adjusted by double gas strut
2. Four retractable medical grade castors
3. Four large pad levelling feet
4. 2pcs adjustable height armrest
5. Medical grade PVC vinyl: fireproof,waterproof, stain, mildew, oil and wear resistant

Function:

1. Adjustable height:460-890mm
2. Adjustable back :67° to -45°
3. Adjustable foot:45° to -25°
4. Adjustable height by 1pc actuator with foot bar system
5. Weight capacity:250kg

SECTION HYDRAULIC TREATMENT TABLE CY-C110H -CHAOYANG MEDICAL

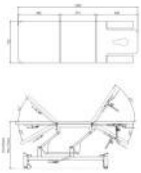

✪ FEATURES

Size: L1980*W700*H470-870mm

Description

1. Back and foot parts adjusted by dobule gas strut
2. Four retractable medical grade castors
3. Four large pad levelling feet
4. 2pcs adjustable height armrest
5. Medical grade PVC vinyl: fireproof, waterproof, stain, mildew, oil and wear resistant

Function:

1. Adjustable height:470-870mm
2. Adjustable back : 67° to -45°
3. Adjustable foot:45° to -25°
4. Adjustable height by 1pc imported hydraulic pump
5. Weight capacity:250kg

SECTION MULTIFUCTION ELECTRIC TREATMENT TABLE CY-C115A -CHAOYANG MEDICAL

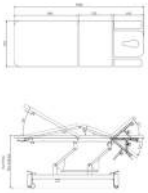

✪ FEATURES

Size: L1980*W700*H480-910mm

Description

1. Back and foot parts adjusted by double gas strut
2. Four retractable medical grade castors
3. Four large pad levelling feet
4. 2pcs adjustable height armrest
5. Medical grade PVC vinyl:fireproof, waterproof, stain, mildew, oil and wear resistant

Function:

1. Adjustable height:480-910mm
2. Adjustable back : 57° to -52°
3. Adjustable foot:0° to 56°
4. Middle part adjustable:0°to 28°
5. Adjustable height and middle part by 2pc actuator with foot switch
6. Weight capacity:250kg

SECTION ELECTRIC TREATMENT TABLE CY-C102 -CHAOYANG MEDICAL

✪ FEATURES

Size: L1980*W700*H460-890mm

Description
1. Back and foot parts adjusted by double gas strut
2. Four retractable medical grade castors
3. Four large pad levelling feet
4. Medical grade PVC vinyl:fireproof, waterproof,
5. stain, mildew, oil and wear resistant

Function:
1. Adjustable height:460-890mm
2. Back tilt angles:67°to -45°
3. Adjustable split foot: 51°to -33°
4. Adjustable height by 1pc actuator with foot switch
5. Weight capacity:250kg

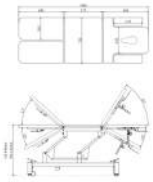

SECTION ELECTRIC TREATMENT TABLE CY-C123-CHAOYANG MEDICAL

✪ FEATURES

Size: L1980*W700*H480-910mm

Description
1. Back part adjusted by double gas strut
2. Four retractable medical grade castors
3. Four large pad levelling feet
4. Medical grade PVC vinyl: fireproof, waterproof, stain, mildew, oil and wear resistant

Function:
1. Adjustable height:480-910mm
2. Adjustable back : 70° to -40°
3. Adjustable foot:0° to 60°
4. Adjustable height by 1pc actuator with foot switch
5. Weight capacity:250kg

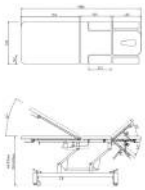

ADULT AND CHILDREN ELECTRIC TILT TABLE CY-C109A&B-CHAOYANG MEDICAL

✪ FEATURES

Description

1. 1pc working table, 4pcs patient strap, tilt angle inclinometer
2. 2pcs motors (one motor controls height, other one controls tilt angle)
3. 4pcs 3" castors
4. Weight capacity:230kg

Function:

1. Standing angle: 0 °to 82°
2. Foot rest adjustable angle: 12° to 90°(relative to horizontal direction)
3. Height adujstable: 540-870mm

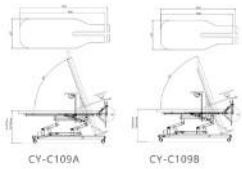

CONTOURED ELECTRIC TREATMENT TABLE CY-C105A CHAOYANG MEDICAL

✪ FEATURES

Size: L1980*W700*H460-890mm

Description

1. Four retractable medical grade castors
2. Four large pad levelling feet
3. Medical grade PVC vinyl:fireproof,waterproof,
4. stain, mildew, oil and wear resistant
5. Adjustable head support and extended foot part

Function:

1. Adjustable height:460-890mm
2. Adjustable head support from 25° to -60°
3. Adjustable height by 1pc actuator with foot switch
4. Weight capacity:250kg

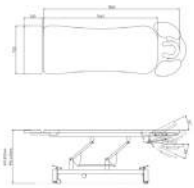

ELECTRIC BOBATH TREATMENT TABLE CY-C104W-CHAOYANG MEDICAL

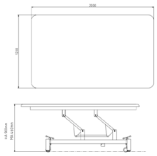

✪ FEATURES

Size: L2000*W1200*H460-900mm

Description

1. Four retractable medical grade castors
2. Four large pad levelling feet
3. Medical grade PVC vinyl:fireproof, waterproof,
4. stain, mildew, oil and wear resistant

Function:

1. Adjustable height:460-900mm
2. Adjustable height by 1pc actuator with foot switch
3. Weight capacity:330kg

ELECTRIC BOBATH TREATMENT TABLE CY-C105W-CHAOYANG MEDICAL

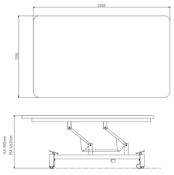

✪ FEATURES

Size:L2000*W1200*H460-900mm

Description

1. Four retractable medical grade castors
2. Four large pad levelling feet
3. Medical grade PVC vinyl:fireproof,waterproof, stain, mildew, oil and wear resistant

Function:

1. Adjustable height:460-900mm
2. Adjustable height by 1pc actuator with foot switch
3. Weight capacity:330kg

ELECTRIC BOBATH TREATMENT TABLE CY-C107W-CHAOYANG MEDICAL

FEATURES

Size: L2060*W1200*H460-900mm

Description

1. Back part adjusted by double gas strut
2. Four retractable medical grade castors
3. Four large pad levelling feet
4. Medical grade PVC vinyl:fireproof, waterproof, stain, mildew, oil and wear resistant

Function:

1. Adjustable height:460-900mm
2. Adjustable back :90° to -33°
3. Adjustable height by 1pc actuator with foot switch
4. Weight capacity:330kg

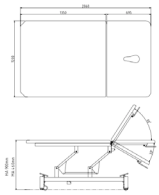

ELECTRIC BOBATH TREATMENT TABLE CY-C108W-CHAOYANG MEDICAL

FEATURES

Size: L2000*W1000*H460-900mm

Description

1. Back and foot parts adjusted by double gas strut
2. Four retractable medical grade castors
3. Four large pad levelling feet
4. Medical grade PVC vinyl: fireproof, waterproof, stain, mildew, oil and wear resistant

Function:

1. Adjustable height:460-900mm
2. Adjustable back : 78° to -32°
3. Adjustable foot:45° to -25°
4. Adjustable height by 1pc actuator with foot switch
5. Weight capacity:330kg

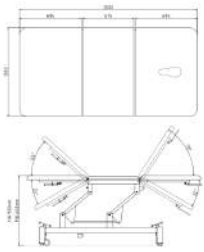

ELECTRIC PODIATRY CHAIR CY-C100-CHAOYANG MEDICAL

✪ FEATURES

Size:L1900 * W600 * H480-910mm

Description

1. Back part adjusted by double gas strut and foot part adjusted single gas strut, seat and height of table adjusted by actuators
2. Four retractable medical grade castors
3. Four large pad levelling feet
4. 1 pair adjustable armrest
5. Medical grade PVC vinyl:fireproof, waterproof, stain, mildew, oil and wear resistant

Function:

1. Adjustable height:480-910mm
2. Adjustable back:0°to78°°
3. Adjustable foot:0°to -80°
4. Adjustable seat:0°to 20°
5. Adjustable height and seat by 2pc actuator with hand switch
6. Weight capacity:250kg

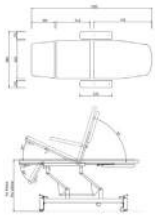

ELECTRIC TREATMENT TABLE CY-C105

✪ FEATURES

Size: L1950*W700*H460-890mm

Description

1. Four retractable medical grade castors
2. Four large pad levelling feet
3. Medical grade PVC vinyl:fireproof, waterproof, stain, mildew, oil and wear resistant

Function:

1. Adjustable height:460-890mm
2. Adjustable height by 1pc actuator with foot switch
3. Weight capacity:250kg

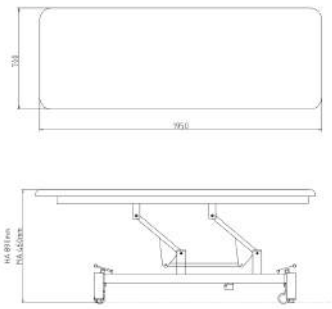

ELECTRIC VET TABLE CY-C105B-CHAOYANG MEDICAL

✪ FEATURES

Size: L1100 * W560 * H410-960mm

Size:L1100*W560*h430-975mm

1. Electric Hi Lo operation by footbar, Height range from 41cm to 96cm in approx 30 seconds.
2. Durable 304 stainless steel patient surface Sleek new design with rounded frame legs for safety
3. 10cm lockable castors for safety and mobility
4. Reliable TiMotion motor with rechargeable battery5) Weight Capacity: 250KG

Examination table
CY-C111
Size: L1950*W710*H820mm

Examination table
CY-C111F (Round legs)
Size: L1950*W710*H820mm

Examination table
CY-C111D (Round legs)
Size: L1950*W710*H820mm

Examination Table
CY-C111E
Size: L1850*W620*H680mm

MULTIFUNCTION ELECTRIC TREATMENT TABLE CY-C119-CHAOYANG MEDICAL

✪ FEATURES

Size: L1920 * W700 * H480-910mm

Description:
1. All gas struts standard supports each part
2. Four retractable medical grade castors
3. Four large pad levelling feet
4. 2 pair adjustable arm rest
5. Medical grade PVC vinyl:fireproof, waterproof, stain, mildew, oil and wear resistant

Function:
1. Adjustable head: 35°to -45°.
2. Adjustable backrest:0°to 55°
3. Adjustable seat: 0°to 20°.
4. Adjustable foot : 0°to -45°.
5. Adjustable height:480-910mm
6. Adjustable height by 1pc actuator with foot switch
7. Weight capacity:250kg

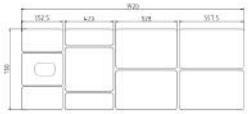

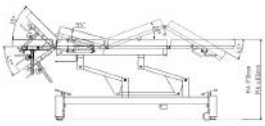

MULTI-PURPOSE ELECTRIC TREATMENT CHAIR CY-C106 - CHAOYANG MEDICAL

✪ FEATURES

Size: L1900*W550*H480-910mm

Description:
1. Double gas strut back and foot adjustment
2. Four retractable medical grade castors
3. Four large pad levelling feet
4. Medical grade PVC vinyl: fireproof, waterproof, stain,mildew, oil and wear resistant
5. Luxury head support and double arm holders,adjustable height of armrest,top of armrest can move front, behind, left and right
6. It can be used as chair and bed for SPA

Function:
1. Adjustable height:480-910mm
2. Adjustable back :0° to 70°
3. Adjustable foot:0° to -75°
4. 1pc actuator with foot switch adjustable height
5. Weight capacity:250kg

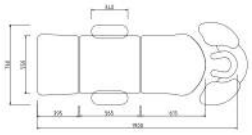
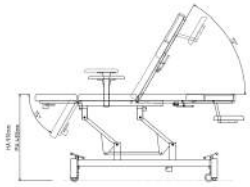

PORTABLE MASSAGE TABLES -CHAOYANG MEDICAL

Portable massage table
CY-C120
Size: L1830*W700*H610mm

Portable massage table
CY-C121
Size: L1830*W700*H610mm

CY-C122
Size: L1830*W620*H580mm

Aluminum massage table
CY-C112
Size: L1820*W630*H635-810mm

Folding massage table
CY-C116
SizeL1800*W600*H700mm

Folding massage table
CY-C117
SizeL1800*W600*H700mm

Triangle bolster
Size: L500*W500*H150mm
L500*W500*H200mm
L500*W500*H300mm
L500*W500*H500mm

Half round bolster
Size: L650*W205*H135mm

Full round bolster
Size: L600*D180mm

BACK BELT-MED

- Safe E-clips
- Comfortable fit
- Encourages natural movement
- Suitable for end-users with poor stability or who have difficulty getting up

The Back Belt sling works with a sit-to-stand lift in order to safely raise or lower persons from a toilet, bed or chair. The padded back provides comfortable back support while getting up. The non-slip surface on the inside of the back prevents the sling from sliding up while the client gets up, allowing both the client and the caregiver to focus entirely on standing up.

Model: **25130C**

Back Belt E-clip (clips), polyester, max. 250 kg (SWL)

Model	Size	A	B	C
25130C - M 03-HCA-HCA-0038	Medium	83 cm	30 cm	39 cm
25130C - L 03-HCA-HCA-0039	Large	92 cm	34 cm	44 cm

BASIC SLING-MED

- Shoulder high model with divided leg parts
- No reinforcements, handles or padding
- Suitable for end-user with poor trunk control (but with good head stability)
- Upright sitting position

The Basic soft sling can be used in most lifting situations, fits most end-users and is a good choice if it is not established who is going to be using the sling.
Basic Slings offer good support for the entire back without head support, reinforcements or padding. They are suitable for persons with poor trunk stability and upright seating which is especially helpful to ensure proper positioning is achieved when the end-user is placed in a chair or other seating.

Model: **25045**

Basic Sling Net, polyester net (loops), max. 300 kg (SWL)

Model: **25070**

Basic Sling, polyester (loops), max. 300 kg (SWL)

Model		Size	A	B	C
25045 - M 03-HCA-HCA-0046	**25070 - M** 03-HCA-HCA-0075	Medium	31 cm	88 cm	63 cm
25045 - L 03-HCA-HCA-0001	**25070 - L** 03-HCA-HCA-0003	Large	37 cm	93 cm	65 cm
25045 - XL 03-HCA-HCA-0002	**25070 - XL** 03-HCA-HCA-0098	Extra Large	39 cm	97 cm	70 cm

CHIROPRACTIC TABLE-MED

✪ FEATURES

- 7-section table.
- Head section divided into 2 parts (adjustable gap: 1-5 cm).
- 2 possibilities of head section adjustment: from -35° to +25° with a gas spring and additional adjustment from 0° to +18° (in oposite direction) via second gas spring.
- Rotating slide down armrests (adjustment range: up to -24 cm vertical).
- 2 possibilities of leg section adjustment: from 0° to -25° and side rotation from -15° to 15°.
- Electric high/low height adjustment via foot-operated controller at two sides of the table base.
- 3-layer padding 40 mm, with upholstery in many colours**.
- Shift of shank support: 0-24 cm.
- Settings lock: rotation and shift.
- DROP option (2 cm).
- Second DROP option (2 cm).
- Mechanism of dynamic force compensation - to minimize the patient's body weight resting on the leg section of the table via an offload and stearing mechanism.
- 2 fixed wheels + 2 castors central lifted (F2 system).
- LUX upholstery (PU) - option.

Technical data:

Dimensions (LxW) [cm]:	185-210 x 50 (55 - head section + armrest)
Height adjustment [cm]:	55-96
Weight [kg]:	135
Max. lifting capacity [kg]:	180
Shift [cm]:	0-24
Power supply [V; Hz]:	0-24100-240; 50-60

Box dimensions: **220 x 68 x 75 cm** Weight: **+25 kg**

Length: **185-210 cm** | Height: **55-96 cm** | Width: **55 cm** | Weight: **135 kg** | Max load*: **180 kg**

DEMIRO SPINE STOOL-MED INMED

Supports correct posture
The stool's ability to rotate horizontally the body in space (360°) makes it easy to adapt to different working positions. Regular use helps to maintain correct posture, which can ultimately help to reduce the discomfort associated with sitting for long periods of time.

Adjustable seat height
The seat height adjustment allows precise positioning to achieve a 90-degree knee flexion angle. This is one of the elements that helps to maintain correct posture by reducing the load on the spine and the risk of hunching.

Comfort And Ergonomics At The Same Time
Using a seat that tilts back and forth allows you to adjust the angle to match the natural curves of the spine, helping to maintain correct posture.

EXAMINATION AND TREATMENT TABLE KANGOO-MED

FEATURES

- 3- section table, with a long head section.
- Adjustable head and foot section from -18° to 85° with a gas springs.
- Trendelenburg/reverse Trendelenburg.
- Face hole in the head section with a removable face hole cover.
- Two-layer padding with upholstery in many colours**.
- Powder coated stable steel frame.
- 2 folding horizontal barriers on both sides; fold-down when table subjected to normal use activities.
- Electric height adjustment (47-92 cm) using manual remote control.
- Battery backup, cordless operation.
- Safety - table equipped with an access lock - safety key and automatic locking (to lock height adjustment function).
- 4 large 125 mm braked castors with foot locking mechanism.
- LUX upholstery (PU) as option.

Technical data:

Height adjustment [cm]:	46-91
Dimensions (length x width) [cm]:	189 x 72
Weight [kg]:	116
Max. lifting capacity [kg]:	250
Paper roll width [cm]:	60
Power supply [V/Hz]:	100-240/50-60

Box dimensions: **220 x 85 x 75 cm** Weight: **+50 kg**

Length: **189 cm** | Height: **46-91 cm** | Width: **72 cm** | Weight: **116 kg** | Max load*: **250 kg**

EXAMINATION TABLE-MED INMED

Pacific Examination and Treatment Table is intended for standard examinations and procedures carried out in a wide range, also used for simple medical activities. It is usually used in professional medical care facilities, i.e. hospitals, clinics, in sanatoriums, nursing homes, as well as in doctor's offices, treatment rooms. Well-thought-out design, the possibility to adjust the angles of the sections and the stability of the product ensure that the patient is in a comfortable position for examination/treatment.
The benefits of treatment tables are based on the fact that it is possible for the patient to take the right position for the treatment, the possibility to adjust the height and/or sections of the table, which facilitates the work of the rehabilitator/physiotherapist and increases the comfort of the patient during the massage treatment. PACIFIC table is characterized by stability, reliability and ease of use. These features result from careful design, manufacturing methods applied in production and the quality assurance system.

✪ PACIFIC HAWAII FEATURES:

- 2- or 4-section table with electric height adjustment,
- hand-held remote control,
- head section adjustment by the means of gas spring, with shaped face hole with crescent plug,
- foldable armrests lowered till 19 cm (only in 4-section table),
- multi-layered and very soft upholstery of 15 cm thickness,
- Trendelenburg/reverse Trendelenburg position (15o),
- 2 wheels, 2 feet.

Pacific HAWAII

✪ PACIFIC FIJI FEATURES:

- 5- or 7-section table with electric height adjustment,
- hand-held remote control,
- head section adjustment by the means of gas spring, with shaped face hole with crescent plug,
- foldable armrests lowered till 19 cm (only in 7-section table),
- adjustment of: back / thighs / shank sections by means of electric actuators,
- multi-layered and very soft upholstery of 15 cm thickness,
- Trendelenburg/reverse Trendelenburg position (15o),
- 2 wheels, 2 feet.

Pacific FIJI

FULL BODY SLING-MED

- High back model with divided leg parts
- Extra head support
- Suitable for end-users with poor trunk stability
- Reclined sitting position
- Available with Loops or Clips

The Full Body sling offers good support for the entire back and extra support for the head. Available in 3 different fabrics, the Full Body sling can be used in most lifting situations and fits most end-users.
The Full Body slings are designed to create a reclined seated position which is extremely helpful if the person has poor trunk stability and/or a tendency to overstress themselves (spastic performance) or are hypertonic. The reclined position prevents the user from sliding out of the sling.

Model: **25005**

Full Body Sling Net, polyester net (loops), max. 300 kg (SWL)

Model	Size	A	B	C
25005 - M 03-HCA-HCA-0082	Medium	26 cm	85 cm	95 cm
25005 - L 03-HCA-HCA-0058	Large	34 cm	96 cm	95 cm
25005 - XL 03-HCA-HCA-0089	Extra Large	36 cm	105 cm	106 cm

MASSAGE TABLE JAGUAR P3.F0-F4-MED

FEATURES

- 3-section massage table with postural drainage setting.
- Postural drainage with an electric actuator operated by 2 switches from both sides of the table.
- Width of table top: 69 cm.
- Adjustable head section from -70° to +40° with a gas spring.
- Round face hole in the head section with a removable face hole cover which increases patient's comfort (2 types of cover: round and crescent).
- Adjustable leg section from 0° to 90° with gas spring.
- Two-layer padding with upholstery in many colours.
- Powder coated, very stable scissor steel frame.
- 2 side brackets for the fixation of stabilization belts and elastic bands.
- Traction support sleeves.
- Personal Authorization Safety System with 2 magnetic safety keys.
- HalloTronic® System electric high/low height adjustment from 54 to 95 cm with a lifting capacity up to 200 kg.
- Powder coated steel high/low height adjustment foot bar accessible from each side of the table.
- Rubber feet with 1 cm height adjustment allowing for the levelling of the table.
- Two ways of frame painting: ,,white" or ,,twintone".

2 ways of frame painting

Box dimensions: **220 x 85 x 75 cm** Weight: **+50 kg**

Length: **205 cm** | Height: **54-95 cm** | Width: **69 cm** | Weight: **99/112 kg** | Max load*: **200 kg**

MASSAGE TABLE PUMA-MED

FEATURES

- 2-section massage table with a long head section.
- Width of table top: 69 cm.
- Adjustable long head section from -20° to +85° or 0° to +85° (with special frame) with 2 gas springs.
- Round face hole in the head section with a removable face hole cover (2 types: round and crescent).
- Two-layer padding with upholstery in many colours.
- Powder coated, very stable steel frame.
- 2 side brackets for the fixation of stabilization belts and elastic bands.
- Personal Authorization Safety System with 2 safety magnetic keys.
- HalloTronic® System for electric high/low height adjustment from 52 to 93 cm with a lifting capacity up to 200 kg.
- Powder coated steel high/low height adjustment foot bar accessible from each side of the table.
- Rubber feet with 1 cm height adjustment allowing for the levelling of the table.
- Two ways of frame painting: ,,white'' or ,,twintone''.

2 ways of frame painting

Box dimensions: **220 x 85 x 75 cm** Weight: **+50 kg**

Length: **208 cm** | Height: **52-93 cm** | Width: **69 cm** | Weight: **88/103 kg** | Max load*: **200 kg**

MASSAGE TABLE JAGUAR P5.F0-F4-MED

FEATURES

- 5-section massage table with the postural drainage setting.
- Postural drainage with an electric actuator operated by 2 switches from both sides of the table.
- Width of table top: 69 cm.
- Adjustable head section from -70° to +40° with a gas spring.
- Round face hole in the head section with a removable face hole cover which increases patient's comfort (2 types of cover: round and crescent).
- Rotating slide-down armrests.
- Adjustable leg section from 0° to 90° with a gas spring.
- Two-layer padding with upholstery in many colours.
- Powder coated, very stable scissor steel frame.
- 2 side brackets for the fixation of stabilization belts and elastic bands.
- Traction support sleeves.
- Personal Authorization Safety System with 2 safety magnetic keys.
- HalloTronic® System electric high/low height adjustment from 54 to 95 cm with a lifting capacity up to 200 kg.
- Powder coated steel high/low height adjustment foot bar accessible from each
- side of the table.
- Rubber feet with 1 cm height adjustment allowing for the levelling of the table.
- Two ways of frame painting: ,,white" or ,,twintone".

2 ways of frame painting

Box dimensions: **220 x 85 x 75 cm** Weight: **+50 kg**

Length: **205 cm** | Height: **54-95 cm** | Width: **69 cm** | Weight: **102/115 kg** | Max load*: **200 kg**

MASSAGE TABLE LEOPARD S3.F0-F4-MED

FEATURES

- 3-section massage table.
- Width of table top: 69 cm.
- Adjustable head section from -70° to +40° with a gas spring.
- Round face hole in the head section with a removable face hole cover which increases patient's comfort (2 types of cover: round and crescent).
- Adjustable leg section from 0° to 90° with a gas spring.
- Two-layer padding with upholstery in many colours.
- Powder coated, very stable scissor steel frame.
- 2 side brackets for the fixation of stabilization belts and elastic bands.
- Traction support sleeves.
- Personal Authorization Safety System with 2 magnetic safety keys.
- HalloTronic® System electric high/low height adjustment from 52 to 93 cm with a lifting capacity up to 200 kg.
- Powder coated steel high/low height adjustment foot bar accessible from each side of the table.
- Rubber feet with 1 cm height adjustment allowing for the levelling of the table.
- Two ways of frame painting: ,,white'' or ,,twintone''.

2 ways of frame painting

Box dimensions: **220 x 85 x 75 cm** Weight: **+50 kg**

Length: **205 cm** | Height: **52-93 cm** | Width: **69 cm** | Weight: **93/106 kg** | Max load*: **200 kg**

MASSAGE TABLE LEOPARD S5.F0-F4-MED

FEATURES

- 5-section massage table.
- Width of table top: 69 cm.
- Adjustable head section from -70° to +40° with a gas spring.
- Round face hole in the head section with a removable face hole cover which increases patient's comfort (2 types of cover: round and crescent).
- Rotating slide-down armrests.
- Adjustable leg section from 0° to 90° with a gas spring.
- Two-layer padding with upholstery in many colours.
- • Powder coated, very stable scissor steel frame.
- 2 side brackets for the fixation of stabilization belts and elastic bands.
- Traction support sleeves.
- Personal Authorization Safety System with 2 magnetic safety keys.
- HalloTronic® System electric high/low height adjustment from 52 to 93 cm with a lifting capacity up to 200 kg.
- Powder coated steel high/low height adjustment foot bar accessible from each side of the table.
- Rubber feet with 1 cm height adjustment allowing for the levelling of the table.
- Two ways of frame painting: ,,white" or ,,twintone".

2 ways of frame painting

Box dimensions: **220 x 85 x 75 cm** Weight: **+50 kg**

Length: **205 cm** | Height: **52-93 cm** | Width: **69 cm** | Weight: **96/109 kg** | Max load*: **200 kg**

MASSAGE TABLE-MED

FEATURES

- 2-section massage table.
- Width of table top: 69 cm.
- Adjustable head section from -70° to +40° with a gas spring.
- Round face hole in the head section with a removable face hole cover which increases patient's comfort (2 types of cover: round and crescent).
- Two-layer padding with upholstery in many colours.
- Powder coated, stable scissor steel frame.
- 2 side brackets for the fixation of stabilization belts and elastic bands
- Traction support sleeves. Personal Authorization Safety System with 2 magnetic safety keys.
- HalloTronic® System electric high/low height adjustment from 52 to 93 cm with a lifting capacity up to 200 kg.
- Powder coated steel high/low height adjustment foot bar accessible from each side of the table.
- Rubber feet with 1 cm height adjustment allowing for the levelling of the table.
- Two ways of frame painting: ,,white" or ,,twintone".

Box dimensions: **220 x 85 x 75 cm** Weight: **+50 kg**

Length: **202 cm** | Height: **52-93 cm** | Width: **69 cm** | Weight: **86/99 kg** | Max load*: **200 kg**

METAL TREATMENT COUCH-MED INMED

FEATURES

- Adjustable head rest 10 steps (from 0° to 50°).
- Padding with upholstery in many colours.
- Powder coated, very stable steel frame.
- Paper towel hanger (option).

Box dimen.: **198 x 66 x 17 cm** Weight: **+2 kg**

Technical data:

Number of sections:	2
Head rest section angle adjustment [°]:	0/+50
Dimensions (L x W) [cm]:	193 x 61
Hight [cm]	65
Maxium paper width [cm]	60
Weight [kg]:	16
Max. safe load [kg]:	150

FEATURES

- Upholstery in many colours.
- Height adjustment.
- Tilting seat (front/back).
- Chrome-plated base.
- Rubberised castors.

Box dimen.: **60 x 59 x 24 cm** Weight: **+1,5 kg**

Technical data:

Height [cm]:	54-74
Tilting adjustment [°]:	15
Max. load [kg]:	150
Weight [kg]:	7,5
Base ø [cm]	60
Seat dimension [cm]:	43x34

NEUROLOGICAL REHABILITATION TABLE-MED

FEATURES

- 1-section table (electric or hydraulic).
- Extra wide surface.
- Two-layer padding with upholstery in many colours**.
- Powder coated, very wide and stable steel frame.
- Personal Authorization Safety System with 2 magnetic safety keys (only in el. version).
- HalloTronic® System for electric high/low height adjustment from 50 to 99 cm (el. version).
- Hydraulic high/low height adjustment (50-99 cm) via foot pedal accessible from both sides of the table (hydr. version).
- Powder coated steel high/low height adjustment foot bar accessible from each side of the table (el. version).
- Rubber feet with 1 cm height adjustment allowing for the levelling of the table.
- F4 wheeling system - dual-lever retractable castor wheeling system composed of 4 directional castors with central brake and 4 legs with rubber feet.
- Max. lifting capacity up to 200 kg.
- Two ways of frame painting: ,,white" or ,,twintone".
- Max. working load up to 275 kg.

Electric height adjustment

Hydraulic height adjustment

Box dimensions: **220 x 136 x 75 cm** Weight: **+90 kg**

Length: **200 cm** | Height: **50-99 cm** | Width: **120 cm** | Weight: **150 kg** | Max load*: **200 kg**

NEXUS MASSAGE TABLE-MED INMED

NEXUS S5 / S5-H

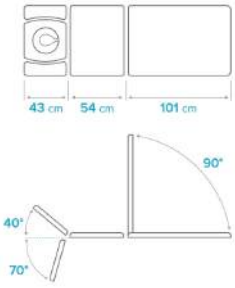

NEXUS P3 / P3-H

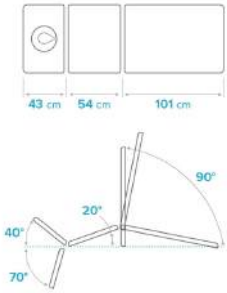

NEXUS P5 / P5-H

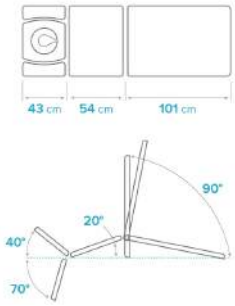

POSITIONING SLING-MED

- Slings for turning and repositioning of end-users
- Offer airflow and breathability
- Ideal for critical care units, persons with no core and head stabilty
- 8 reinforced straps (6 body, 2 head)

The positioning slings from ventilated material are ideal for critical care units as they can be placed behind the person like a sheet. These slings are ideal for sudden or intended positioning/ repositioning, turning and lateral transfers.
These slings easily fit most hospital beds and the material does not promote skin breakdown allowing the sling to remain behind the end-user for short periods of time.

Model: **NSB-401-ST**

Positioning Sling, ventilated material (loops), max. 454 kg (SWL)

Model: **NSB-410-ST**

Bariatric Positioning Sling, ventilated material (loops), max. 454 kg (SWL)

Model	Size	A	B
NSB-401-ST 03-HCA-HCA-0073	One size	107 cm	198 cm
NSB-410-ST - L 03-HCA-HCA-0091	Large	132 cm	208 cm
NSB-410-ST - XL 03-HCA-HCA-0092	Extra Large	147 cm	208 cm

SHOWER CHAIR MOHICAN II,MOHICAN II PLUS-MED INMED

FEATURES

- Battery operated
- Made of welded powder-coated stainless steel sections
- Hand control with functions: raising/lowering seat, forward/ backward tilt (seat)
- Actuators: main actuator (on both sides) for raising/lowering seat; actuator for tilting
- Footboard with height adjustment and a foldable base
- 4 castors with a brake
- Removable seat with a plug and with a toilet bowl
- Removable battery - easy to recharge

Technical Data:

Type	MoHiCan II	MoHiCan II PLUS
Length [mm]:	890	890
Width [mm]:	658	778
Height of the push bar (min./max) [mm]:	1028/1260	
Raising height range [mm]:	495-1010	
Tilt adjustment [°]:	-5/+27	
Height of legrest (from floor) [mm]:	112	
Turning diameter [mm]:	1100	1200
Lifting speed LINAK (raising) (0/max load) [sec]:	42/49	
Lifting speed LINAK (lowering) (0/max load) [sec]:	47/41	
Diameter of castors with brake [mm]:	125	
Power supply [V, HZ]:	100-240~, 50/60	
Battery capacitance [Ah]:	2,9	
Protection level of the control panel:	IPX6	
Max load (SWL) [kg]:	180	250
Mass [kg]:	60	70
Min. charging time [h]:	5	5

Packing dimensions: **100 x 71 x 123 cm** Weight: **+16 kg**

Packing dimensions (Plus): **100 x 85 x 122 cm** Weight: **+20 kg**

TERAPEUTA SCM-2-MED INMED

FEATURES

- 2-section massage table with a long head section.
- Adjustable long head section from 0° to +85° with 2 gas springs.
- Face hole in the head section with a removable face hole cover.
- Two-layer padding with upholstery in many colours.
- Powder coated, very stable steel frame.
- Optional 2 side brackets for the fixation of stabilization belts and elastic bands or 2 retractable side railings for fall prevention.
- Personal Authorization Safety System with 2 safety magnetic keys.
- HalloTronic® System for electric high/low height adjustment from 47 to 95 cm with a lifting capacity up to 225 kg
- Powder coated steel high/low height adjustment foot bar accessible from each side of the table.
- Rubber feet with 1 cm height adjustment allowing for the levelling of the table.
- Two ways of frame painting: ,,white'' or ,,twintone''.

2 ways of frame painting

Box dimensions: **220 x 85 x 75 cm** Weight: **+50 kg**

Length: **202 cm** | Height: **47-95 cm** | Width: **69 cm** | Weight: **80/95 kg** | Max load*: **225 kg**

SLINGS-MED

The catalog contains a proposal of various slings suitable for Meden-Inmed patient lifts. The models differ in purpose, material from which they are made and the method of mounting: loops or clips. The slings are available in various sizes. They are designed with maximum functionality as well as the safety and comfort of end-users in mind.

Full Body Sling
Model: 25005

Basic Sling
Model: 25045

Toileting Sling
Model: 25080

Toileting Sling High
Model: 25090

TERAPEUTA SCM-2-MED INMED

FEATURES

- 2-section massage table.
- Adjustable head section from -70° to +40° with a gas spring.
- Face hole in the head section with 2 removable face hole covers (round, crescent).
- Two-layer padding with upholstery in many colours.
- Powder coated, very stable steel frame.
- 2 side brackets for fixation of stabilization belts and elastic bands.
- Traction support sleeves.
- Personal Authorization Safety System with 2 safety magnetic keys.
- HalloTronic® System for electric high/low height adjustment from 47 to 95 cm with a lifting capacity up to 225 kg.
- Powder coated steel high/low height adjustment foot bar accessible from each side of the table.
- Rubber feet with 1 cm height adjustment allowing for the levelling of the table.
- Two ways of frame painting: ,,white" or ,,twintone".

Box dimensions: **220 x 85 x 75 cm** Weight: **+50 kg**

Length: **202 cm** | Height: **47-95 cm** | Width: **69 cm** | Weight: **80/95 kg** | Max load*: **225 kg**

TERAPEUTA SCM-3-MED INMED

FEATURES

- 3-section massage table.
- Adjustable head section from -70° to +40° with a gas spring.
- Face hole in the head section with 2 removable face hole covers (round, crescent).
- Adjustable leg section from -10° to 80° with 2 gas springs.
- Release handle of the gas spring system in the leg section accessible from both sides of the table.
- Two-layer padding with upholstery in many colours.
- Powder coated, very stable steel frame.
- Traction support sleeves.
- Personal Authorization Safety System with 2 safety magnetic keys.
- HalloTronic® System for electric high/low height adjustment from 47 to 95 cm with a lifting capacity up to 225 kg.
- Powder coated steel high/low height adjustment foot bar accessible from each side of the table.
- Rubber feet with 1 cm height adjustment allowing for the levelling of the table.
- Two ways of frame painting: ,,white" or ,,twintone".

Box dimensions: **220 x 85 x 75 cm** Weight: **+50 kg**

Length: **205 cm** | Height: **47-95 cm** | Width: **69 cm** | Weight: **85/100 kg** | Max load*: **225 kg**

TERAPEUTA SCM-4-MED INMED

FEATURES

- 4-section massage table.
- Adjustable head section from -70° to +40° with a gas spring.
- Face hole in the head section with 2 removable face hole covers (round, crescent).
- Innovative self-locking fold-down armrests in head section (one hand operated) - SmartS4Arms (Smart Slide For Arms).
- Two-layer padding with upholstery in many colours.
- Powder coated, very stable steel frame.
- 2 side brackets for the fixation of stabilization belts and elastic bands.
- Traction support sleeves.
- Personal Authorization Safety System with 2 magnetic safety keys.
- HalloTronic® System for electric high/low height adjustment from 47 to 95 cm with a lifting capacity up to 225 kg.
- Powder coated steel high/low height adjustment foot bar accessible from each side of the table.
- Rubber feet with 1 cm height adjustment allowing for the levelling of the table.
- Two ways of frame painting: ,,white'' or ,,twintone''

2 ways of frame painting

Box dimensions: **220 x 85 x 75 cm** Weight: **+50 kg**

Length: **202 cm** | Height: **47-95 cm** | Width: **69 cm** | Weight: **87/102 kg** | Max load*: **225 kg**

THERASPACE X4.F4-MED

FEATURES

- 4-section massage table.
- High-quality, soft and pleasant to the touch polyurethane upholstery.
- Two-layer padding (3 cm foam 90 kg/cm3 + 1 cm foam 43 kg/cm3).
- Stitched upholstery.
- Round breathing hole in head section with 2 types of plugs (crescent, round).
- Adjusting the angle of the head section with a gas spring (from -65 to 30°).
- Head + backrest section adjustment angle: +80°.
- Seat section adjustment angle: +20°.
- Leg section adjustment angle: -10°/+45°.
- Total length of the table 205 cm.
- Maximum safe load of the table when raising-lowering the table ≤ 200 kg.
- Maximum safe working load of the table ≤ 275 kg.
- Safe electric actuator against crushing.
- F4 wheel system consisting of 4 liftable casters with a central locking mechanism and 4 rubber feet.
- High/low height adjustment foot bar (49-95 cm).
- A frame combining wood and steel.
- Wireless remote control with three programmable positions (option).
- Electric adjustment of: head + backrest, seat + leg sections via control switches.
- Protection against accidental start-up.
- Linak actuator.

Box dimensions: **220 x 85 x 80 cm** Weight: **+50 kg**

Length: **205 cm** | Height: **49-95 cm** | Width: **67 cm** | Weight: **110 kg** | Load:* **200 kg**

TERAPEUTA SSM-5-MED INMED

FEATURES

- 5-section massage table.
- Adjustable head section from -70° to +40° with a gas spring.
- Face hole in the head section with 2 removable face hole covers (round, crescent).
- Innovative self-locking fold-down armrests in head section (one hand operated) - SmartS4Arms (Smart Slide For Arms).
- Adjustable leg section from -10° to 80° with 2 gas springs.
- Release handle of the gas spring system in the leg section accessible from both sides of the table.
- Two-layer padding with upholstery in many colours.
- Powder coated, very stable steel frame.
- Traction support sleeves.
- Personal Authorization Safety System with 2 magnetic safety keys.
- HalloTronic® System for electric high/low height adjustment from 47 to 95 cm with a lifting capacity up to 225 kg.
- Powder coated steel high/low height adjustment foot bar accessible from each side of the table.
- Rubber feet with 1 cm height adjustment allowing for the levelling of the table.
- Two ways of frame painting: ,,white'' or ,,twintone'

Box dimensions: **220 x 85 x 75 cm** Weight: **+50 kg**

Length: **205 cm** | Height: **47-95 cm** | Width: **69 cm** | Weight: **92/107 kg** | Max load*: **225 kg**

THERASPACE M-S4.F4-MED

FEATURES

- 4-section massage table.
- High-quality, soft and pleasant to the touch polyurethane upholstery.
- Two-layer padding (2 cm foam 40 kg/cm3 + 2 cm foam 44 kg/cm3).
- Stretched upholstery.
- Round breathing hole in head section with 2 types of plugs (crescent, round).
- Adjusting the angle of the head section with a gas spring (from -70 to 40°).
- Total length of the bed 203 cm.
- Maximum safe load of the table when raising-lowering the table ≤ 200 kg.
- Maximum safe working load of the table ≤ 275 kg.
- Safe electric actuator against crushing.
- High/low height adjustment foot bar (47-95 cm).
- 2 side brackets for fixation of stabilization belts.
- 2 traction support sleeves.
- F4 wheel system consisting of 4 liftable casters with a central locking mechanism and 4 rubber feet.
- A frame combining wood and steel.
- Protection against accidental start-up.
- Linak actuator.
- One-handed adjustment of armrest - SmartS4Arms

High/low height adjustment foot bar

Box dimensions: **220 x 85 x 80 cm** Weight: **+50 kg**

Length: **203 cm** | Height: **47-95 cm** | Width: **69 cm** | Weight: **115 kg** | Load*: **200 kg**

THERASPACE X8.F4-MED

FEATURES

- 8-section massage table.
- The ability to adjust the armrests with one hand - SmartS4Arms.
- Swiveling sides in the backrest section.
- High-quality, soft and pleasant to the touch polyurethane upholstery.
- Two-layer padding (3 cm foam 90 kg/cm3 + 1 cm foam 43 kg/cm3).
- Stitched upholstery.
- Round breathing hole in head section with 2 types of plugs (crescent, round).
- Adjusting the angle of the head section with a gas spring (from -65 to 30°).
- Head + backrest section adjustment angle: +80°.
- Seat section adjustment angle: +20°.
- Leg section adjustment angle: -10°/+45°.
- Total length of the table 205 cm.
- Maximum safe load of the table when raising-lowering the table ≤ 200 kg.
- Maximum safe working load of the table ≤ 275 kg.
- Safe electric actuator against crushing.
- F4 wheel system consisting of 4 liftable casters with a central locking mechanism and 4 rubber feet.
- High/low height adjustment foot bar (49-95 cm).
- A frame combining wood and steel.
- Wireless remote control with three programmable positions (option).
- Electric adjustment of: head + backrest, seat + leg sections via control switches.
- Protection against accidental start-up.
- Linak actuator.

Box dimensions: 220 x 85 x 80 cm Weight: +50 kg

Length: 205 cm | Height: 49-95 cm | Width: 67 cm | Weight: 110 kg | Load*: 200 kg

THERASPACE Z3.F4-MED

FEATURES

- 3-section massage table.
- High-quality, soft and pleasant to the touch polyurethane upholstery.
- Two-layer padding (3 cm foam 90 kg/cm3 + 1 cm foam 43 kg/cm3).
- Stitched upholstery.
- Round breathing hole in head section with 2 types of plugs (crescent, round).
- Adjusting the angle of the head section with a gas spring (from -65 to 30°).
- Middle section adjustment angle: -20° (Pivot adjustment).
- Head + middle section adjustment angle: +80°.
- Leg section adjustment angle: +8°.
- Total length of the table 205 cm.
- Maximum safe load of the table when raising-lowering the table ≤ 200 kg.
- Maximum safe working load of the table ≤ 275 kg.
- Safe electric actuator against crushing.
- High/low height adjustment foot bar (49-95 cm).
- F4 wheel system consisting of 4 liftable casters with a central locking mechanism and 4 rubber feet.
- A frame combining wood and steel.
- Wireless remote control with three programmable positions (option).
- Electric adjustment of: head + middle, middle + leg sections via control switches.
- Protection against accidental start-up.
- Linak actuator.

Box dimensions: **220 x 85 x 80 cm** Weight: **+50 kg**

Length: **205 cm** | Height: **49-95 cm** | Width: **67 cm** | Weight: **110 kg** | Load*: **200 kg**

THERASPACE Z7.F4-MED

FEATURES

- 5-section massage table.
- The ability to adjust the armrest with one hand - SmartS4Arms.
- High-quality, soft and pleasant to the touch polyurethane upholstery.
- Two-layer padding (3 cm foam 90 kg/cm3 + 1 cm foam 43 kg/cm3).
- Stitched upholstery.
- Round breathing hole in head section with 2 types of plugs (crescent, round).
- Adjusting the angle of the head section with a gas spring (from -65 to 30°).
- Middle section adjustment angle: -20° (Pivot adjustment).
- Head + middle section adjustment angle: +80°.
- Leg section adjustment angle: +8°.
- Total length of the table 205 cm.
- Maximum safe load of the table when raising-lowering the table ≤ 200 kg.
- Maximum safe working load of the table ≤ 275 kg.
- Safe electric actuator against crushing.
- High/low height adjustment foot bar (49-95 cm).
- F4 wheel system consisting of 4 liftable casters with a central locking mechanism and 4 rubber feet.
- A frame combining wood and steel.
- Wireless remote control with three programmable positions (option).
- Electric adjustment of: head + middle, middle + leg sections via control switches.
- Protection against accidental start-up.
- Linak actuator.

Box dimensions: **220 x 85 x 80 cm** Weight: **+50 kg**

Length: **205 cm** | Height: **49-95 cm** | Width: **67 cm** | Weight: **110 kg** | Load*: **200 kg**

THERASPACE Z7.F4-MED

FEATURES

- 7-section massage table.
- The ability to adjust the armrest with one hand - SmartS4Arms.
- Swiveling sides in the middle section.
- High-quality, soft and pleasant to the touch polyurethane upholstery.
- Two-layer padding (3 cm foam 90 kg/cm3 + 1 cm foam 43 kg/cm3).
- Stitched upholstery.
- Round breathing hole in head section with 2 types of plugs (crescent, round).
- Adjusting the angle of the head section with a gas spring (from -65 to 30°).
- Middle section adjustment angle: -20° (Pivot adjustment).
- Head + middle section adjustment angle: +80°.
- Leg section adjustment angle: +8°.
- Total length of the table 205 cm.
- Maximum safe load of the table when raising-lowering the table ≤ 200 kg.
- Maximum safe working load of the table ≤ 275 kg.
- Safe electric actuator against crushing.
- High/low height adjustment foot bar (49-95 cm).
- F4 wheel system consisting of 4 liftable casters with a central locking mechanism and 4 rubber feet.
- A frame combining wood and steel.
- Wireless remote control with three programmable positions (option).
- Electric adjustment of: head + middle, middle + leg sections via control switches.
- Protection against accidental start-up.
- Linak actuator.

Box dimensions: 220 x 85 x 80 cm Weight: +50 kg

Length: 205 cm

Height: 49-95 cm

Width: 67 cm

Weight: 110 kg

Load*: 200 kg

TOILETING SLING-MED

MODEL: 25080

Toileting sling, polyester (loops), max. 300 Kg (swl)

SPECIFICATIONS

Model	Size	A	B	C
25080 - M 03-HCA-HCA-0094	Medium	48 cm	90 cm	33 cm
25080 - L 03-HCA-HCA-0004	Large	49 cm	97 cm	33 cm
25080 - XL 03-HCA-HCA-0095	Extra Large	56 cm	100 cm	38 cm

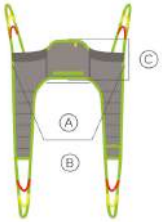

MODEL: 25090

Toileting Sling High Net, polyester net (loops), max. 300 kg (SWL)

SPECIFICATIONS

Model	Size	A	B	C
25090 - M 03-HCA-HCA-0047	Medium	48 cm	92 cm	83 cm
25090 - L 03-HCA-HCA-0005	Large	49 cm	99 cm	90 cm
25090 - XL 03-HCA-HCA-0096	Extra Large	56 cm	101 cm	100 cm

MODEL: 25090C

Toileting Sling High E-clip Net (clips), max. 250 kg (SWL)

SPECIFICATIONS

Model	Size	A	B	C
25090C - M 03-HCA-HCA-0076	Medium	48 cm	90 cm	76 cm
25090C - L 03-HCA-HCA-0069	Large	50 cm	98 cm	81 cm
25090C - XL 03-HCA-HCA-0077	Extra Large	56 cm	101 cm	94 cm

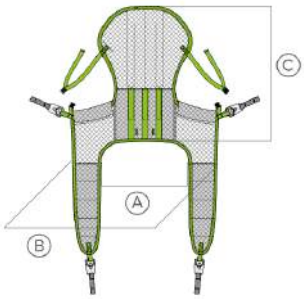

UNIVERSAL BASIC MESH SLING-MED

The sling is intended for people who had good control about head position and no need additional support around the head. It provides very good support around the thighs and upper body, giving the user a sense of comfort and safety. It is used for transfers from a sitting or lying position. For people with no torso stability. The sling made of polyester mesh, suitable for bathing.

SPECIFICATIONS

Model	Size	Y	Z
009-09815 Universal Basic Mesh M 03-WCR-WCR-0069	Medium	48 cm	66 cm
009-09816 Universal Basic Mesh L 03-WCR-EGL-0028	Large	52 cm	75 cm
009-09817 Universal Basic Mesh XL 03-WCR-WCR-0070	Extra Large	68 cm	75 cm

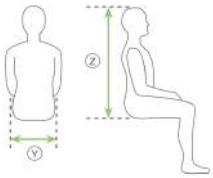

UNIVERSAL BASIC SLING-MED

The sling is designed for people who need additional support around the head, with no or poor stability of the torso, head and neck. The sling provides very good support around the thighs and upper body, giving the user a sense of comfort and safety. It is used for transfers from a sitting or lying position.

SPECIFICATIONS

Model	Size	Y	Z
009-09825 Universal Basic HS M 03-WCR-WCR-0005	Medium	48 cm	91 cm
009-09826 Universal Basic HS L 03-WCR-WCR-0006	Large	52 cm	100 cm
009-09827 Universal Basic HS XL 03-WCR-WCR-0020	Extra Large	68 cm	100 cm

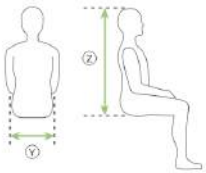

ZEPU-DK1-2

ELECTRIC REHABILITATION TABLE SERIES

ZEPU-DK1

ZEPU-DK2

ZEPU-DK1	ZEPU-DK2
Outline Dimension(mm): 2050×920X(940-2280) (LxWxH)	Outline Dimension(mm): 2050×920X(940-2280) (LxWxH)
Weight:120kgs	Weight: 155kgs

✪ FEATURES

- New functions: standing function and waist flexion&extension function.
- Double values: nursing and rehabilitation.
- Provides the patients with standing training during early stage.
- Set range of flexion and extension and walking speed, according to training target.
- Offers the long-term bedridden daily standing and leg joint motion training.

ZEPU-DQ1-2

ELECTRIC TILT TABLE

ZEPU-DQ1

ZEPU-DQ2

ZEPU-DQ1	ZEPU-DQ2
Size (mm): 2080×885x(1000-2230) (LxWxH)	Size (mm): 2080×885x(1000-2230) (LxWxH)
Weight: 89kgs	Weight: 93kgs

✪ FEATURES

- Provide the position of stable transfer training.
- The lifting angle of accurate setting.
- Do exercise training of dorsiflexion, inversion and ectropion of ankle joint.
- Promote the recovery of lower limb load-bearing.

ZEPU-PTC2-3

PT EXERCISE TABLE

ZEPU-PTC2

ZEPU-PTC3

✪ FEATURES

- Different height is controlled by the manual electric switch.
- Easy to fix and move the table through retractable casters.
- Backrest of ZP-PTC-3 could be set from 0~75°.
- The table of ZP-PTC-3 is designed to two sections.

ZEPU-PTC2	ZEPU-PTC3
Size (mm): 1900×1230×(400-800)(L×W×H)	Size (mm): 2080 ×1200×(400-800) (L×W×H)
Weight: 100kgs	Weight: 100kgs

ZEPU-TQ10-20-30

ELECTRIC TRACTION BED

✪ FEATURES

- Ergonomic strap design.
- Optional heated mattress.
- Intelligent traction rope operation and control technology, traction rope retracting more freely.
- Built-in anti-overdraw program and external emergency stop control, offering double protections
- Multiple traction treatment modes: intermittent traction, progressive traction, intermittent traction, cyclic progressive mode, custom mode.

ZEPU-TQ10
Tractor size (mm): 580x310x740(LxWxH)
Weight:55kgs

ZEPU-TQ20
Size (mm): 580x310x740(LxWxH)
Weight:55kgs

ZEPU-TQ30
Size(mm)-Main frame: 410 x 200x 480(LxWxH)
Size(mm)-Bed: 1800 x1000 x (680-1050) (LxWxH)
Weight:137kgs

ZEPU-TWC-3-4-5-6-7-8-9

MULTI-POSITION MEDICAL TREATMENT BED

ZEPU-TWC-3

ZEPU-TWC-4

ZEPU-TWC-5

ZEPU-TWC-6

ZEPU-TWC-7

ZEPU-TWC-8

ZEPU-TWC-9

✪ FEATURES

- The table is divided into several sections and each section is adjusted in different angles.
- Have a good effect on the cervical, thoracic and lumbar diseases.
- Easy for therapist to do rehab exercise on the different positions of patients.
- Height of each section of table is adjustable.

ZEPU-TWC
Size (mm): 2165×730×(485-945) (L×W×H)
Weight: 125kgs

08

Hydrotherapy & Thermal Therapy

HYDROCOLLELATOR THERAPY HAOBRO

HB-RF1
HYDROCOLLATOR HEATING UNIT

Product principle
The heat-gathering mineral materials of the hot pack are used. The heat and water vapor emitted after heating acts on the treatment site. So the method can also be called wet-hot compress therapy.

Scope of application
In soft tissue sprain recovery period, for muscle fibrositis, periarthritis of the shoulder, chronic arthritis, joint contracture stiffness, stiffness, muscle spondylosis, and muscle tension and soreness lumbar caused by spondylopathy.
spasm, cervical

FEATURES

1. Standard configuration: 6 specifications (standard, small, large, oversized, shoulder and neck, and knee), a total of 15 hot packs.
2. With intelligent countdown, and reasonable setting of working time, it can keep constant temperature during working hours, and can automatically cut off power and stop heating at the end of countdown.
3. Triple safety function: water shortage alarm, over temperature alarm, and fault alarm.
4. Auto-calibration: The sensor's auto-calibration function keeps the parameters accurate.
5. Real-time display: real-time display of time and measured temperature.
6. Memory function: it can automatically save the last set parameters, so there is no need to reset the device when it is turned on.

ABSORPTION COLUMN SATURATOR AND CARBOBED-MED INMED

ABSORPTION COLUMN SATURATOR

FEATURES

- Water efficiently saturated with carbon dioxide (50 l/min)
- Maximum number of connected Balmed bath tubs – 5
- Gauge indicating the pressure in the water supply network
- Electrowalve automatically regulates the water supply
- Gauge indicating the pressure in the carbondioxide supply network
- Control panel box
- Light indicator of tank filled with water
- Stainless steel tank (approx. 160 l) with ceramic rings, accele- rating water saturation
- Safety guaranteed by usage of certified container

Packing dimensions: **215 x 90 x 110 cm** Weight: **+50 kg**

1. Safety valve
2. H_2O delivery set
3. Control panel set
4. CO_2 delivery
5. Saturator column
6. Saturated water drainage set

Technical data:

Efficiency [l/min]:	max. 50
Dimensions (height x diameter) [cm]:	202 x 32,5
Weight [kg]:	120
Power consumption [W]:	max. 60
Power supply [V/Hz]:	230/50

CARBObed

FEATURES

- Automated treatment procedure
- Quick and effective sealing of the treatment chamber
- Automatic carbon dioxide refill and circulation
- High and stable gas concentration on the treated body part Automatic carbon dioxide moisturizing and heating increases treatment effectiveness immediately from the beginning Adjustable treatment temperature 30÷40°C (+/-1°)
- Sound signal at the end of treatment
- Controlled carbon dioxide disposal after treatment
- Carbon dioxide consumption: maximum 18 l/min (practical efficiency: ca. 70 treatments with 26kg gas cylinder) Mobile construction
- Adjustable headrest angle
- Patient can stay on his/her clothes

Packing dimensions: **240 x 80 x 140 cm** Weight: **+40 kg**

Technical data:

Dimensions (L x W x H) [cm]:	215 x 70x 98
Height of laying level [cm]:	59
Power supply [V/Hz/VA]:	230/50/800
Consumption of CO_2 [l/min]:	max. 18
Weight [kg]:	85

HYDROMASSAGE MEMBRANE UNIT AQUAI

✪ FEATURES

- 6 programmable and independent zones
- Nozzles can work simultaneously or in zones
- 6 standard programs
- 1 user program (it is a repeated sequence of working massage zones, which consists of 6 stages at most; for each stage can be chosen zones active at a specific moment; for a given stage can be chosen 3 simultaneously working zones at most)
- Membrane surface temperature setting: temperature adjustable from 30 to 40°C
- Adjustable treatment time (1–30 min)
- Delayed start at programmed number of hours
- Adjustable frequency and sequence of zones
- Integrated heating system
- Internal water cooling system maintains water temperature during preset hours regardless of the number of treatments
- No need to connect to water tap
- Colour touch panel
- LED lighting at the base
- Air vent located on the diaphragm as port of deaeration system
- Handles (left and/or right) – additional accessories

Technical data:

Dimensions (L x W x H) [cm]:	240 x 115 x 65
Capacity [l]:	220
Weight (empty/filled with water) [kg]:	190/410
Max. load (SWL) [kg]:	135
Power supply [V/Hz]:	230/~50 or 400 3N/~50
Protection class, application part:	I, type B

WATER SUPPLY STATION EKOPOMPA

✪ FEATURES

- Low water consumption – closed water circuit
- Water pressure in the circuit is maintained by a pump, powered by 230 VAC/50 Hz, working with a water tank
- The inside of the station is additionally cooled by a fan-induced air flow
- Ekopompa uses water stored in a built-in 10 l tank
- Easily connected to the original Aquavibron MEDIMARK device without conversions or modifications hindering its functionality
- Adjustable massage force allows the therapist to set a gentle massaging intensity for more sensitive areas
- Water installation is made of PVC pipes and hoses in acid-resistant steel plating
- Holder for the suspension of the Aquavibron apparatus
- Handle for transportation
- 4 castors (with brakes)
- The residual current device (RCD) inside the EKOPOMPA I station
- Suitable for use in rehabilitation centers and sanatoriums

Technical data:

Water tank capacity min./max. [l]:	7/10
Current consumption [A]:	3
Power supply [V/Hz]:	230/50
Dimensions (L x W x H) [mm]:	61 x 50 x 88
Weight (empty) [kg]:	40
Protection class:	I

UNDERWATER MASSAGE DEVICE AQUAMOBIL

✪ FEATURES

- Casing made of composite material
- Water installation is made of copper pipes and hoses with braid made of acid resistant steel
- 3 interchangeable nozzles with diameters: Ø 4, 05, 06
- Dry-running protection of the pump
- 2 long hoses
- Filter at the inlet of the suction hose to protect the pump from damage by contaminants present in the post-treatment water
- Control panel
- A pressure gauge
- Thermometer (water temperature is displayed on the control panel during the treatment)
- Disinfection system
- Transportation handles
- Mobile – casters with locking

Technical data:

Pressure of water jet [bar]:	0-4
Current consumption [A]:	7
Power supply [V/Hz]:	230/~50
Dimensions (L x W x H) [cm]:	47 x 74 x 107
Weight [kg]:	55
Lenght of hose [m]:	2,5 (longer-option)
Protection class:	I

RING SHOWER BRYZA, TYPE: NPL2, NPLE

NPL2

NPLE

✪ BRYZA TYPE NPL2 FEATURES:

- Free-standing console (permanently installed) made of composite material
- Water installation made of copper pipes and flexible hoses
- Independent smooth temperature adjustment via 2 thermomixer knobs: for warm and for cold water
- Valve for quick change of water temperature (mixing valve), used for quick warm water – cold water change with the possibility of adding warm water to cold water if the cold water temperature is too low
- Valve to regulate pressure and cut off the water
- Thermometer

✪ BRYZA TYPE NPLE* FEATURES:

- Free-standing console (permanently installed) made of composite material
- Water installation made of copper pipes and flexible hoses
- Independent smooth temperature adjustment via 2 thermomixer knobs: for warm and for cold water
- Quick changes of temperature between cold and warm water (2 electrovalves)
- Electronic control panel with temperature indication
- Console has to be permanently connected to the electric system
- 3 standard programs, 4 user programs
- Program switches two valves on and off. One valve controls the flow of warm water and the other one – cold water (these valves are never switched on simultaneously). Switching of the valves takes place in cycles. Each cycle consists of two stages: 1 – warm water, 2 – cold water. The number of cycles can be set by the user between 1 and 7. Can be set any duration for each cycle. For warm water the time is set in minutes (from 0 to 99) and for cold water in seconds (from 0 to 99).
- Compensation tank for reduction of small water pressure fluctuations in the water system (with PUMP option)

Technical data:

Cold and warm water pressure [bar]:	5-6
Warm water temperature [°C]:	max. 60
Power supply (applicable to NPLE [V/Hz]:	230/50
Power consumption (applicable to NPLE) [W]:	max. 25
Power consumption (version with PUMP) [W]:	800
Dimensions NPL2 (H x W x L) [cm]:	94 x 64 x 42
Dimensions NPLE (H x W x L) [cm]:	94 x 64 x 42
Dimensions shower frame (H x W x L) [cm]:	226 x 89 x 95

JET SHOWER ORKAN TYPE: NBC1, NBC2, NBC2E

NBC1

NBC2E

JET SHOWER ORKAN TYPE NBC1 FEATURES:

- Free-standing console (permanently installed), made of composite material
- Water system consists of copper tubes and hoses braided with acid-resistant steel.
- 2 massage nozzles for jet showers
- 2 manometers for pressure indications (independent for each nozzle)
- 2 thermometers for temperature indications (independent for each nozzle)
- Water dispersion adjustment via a sprinklers (independent for each nozzle)
- The massage nozzles (with forearm supports) rotatable within the treatment area
- 2 thermostatic mixing valves for independent temperature adjustment for the two nozzles
- The ability to work with two nozzles at the same time
- 2 pressure (water stream intensity) adjustment or shut-off valves (independent for each nozzle)
- The nozzles equipped with a lever that opens the stream of water and with a lock allowing for continuous jet shower)
- 4 adjustable feet for leveling the device

JET SHOWER ORKAN TYPE NBC2 FEATURES:

- Free-standing console (permanently installed), made of composite material
- Water system consists of copper tubes and hoses braided with acid-resistant steel. The external hoses are selected to meet strict operational requirements
- Thermostatic mixer knob for smooth warm water temperature control
- Thermostatic mixer knob for smooth cold water temperature control
- Quick water temperature adjustment lever allowing for switching between warm water and cold water from the thermostates
- Manometer, thermometer
- 3 rubber hoses with nozzles (for pouring, for concentrated and diffused stream of water)
- 3 pressure adjustment or shut-off valves (independent for each hose)
- 4 adjustable non-slip feet for leveling the device

JET SHOWER ORKAN TYPE NBC2E FEATURES:

- Free-standing console (permanently installed), made of composite material
- With pump which switches on when the pressure decreases below 1.3 bar, and switches off when the pressure exceeds 3.3 bar
- Permanently connected to the electrical installation
- Water system consists of copper tubes and hoses braided with acid-resistant steel. The external hoses are selected to meet strict operational requirements
- Thermostatic mixer knob for smooth warm water temperature control
- Thermostatic mixer knob for smooth cold water temperature control
- Quick water temperature adjustment lever allowing for switching between warm water and cold water from the thermostates
- Manometer, thermometer
- 3 rubber hoses with nozzles (for pouring, for concentrated and diffused stream of water)
- 3 pressure adjustment or shut-off valves (independent for each hose)
- Power-on and pump operation indicator lights
- Power switch of the pump
- 4 adjustable non-slip feet for leveling the device

Technical data:

Cold and warm water pressure [bar]:	5-6
Warm water temperature [°C]:	max. 60
Power supply (applicable to NPLE [V/Hz]:	230/50
Power consumption (applicable to NPLE) [W]:	max. 25
Power consumption (version with PUMP) [W]:	800
Dimensions NPL2 (H x W x L) [cm]:	94 x 64 x 42
Dimensions NPLE (H x W x L) [cm]:	94 x 64 x 42
Dimensions shower frame (H x W x L) [cm]:	226 x 89 x 95

AQUAMOTION-MED INMED

Aquamotion Junior, Aquamotion Junior Plus
Two models of treadmill are intended for children training. It characterized by extremely compact design. It can be placed in small rooms from 9 m2. The most important advantage for the couch is no need to get into the water, and work with the child in an upright position.

The water level is constant. The immersion depth of the child is controlled by lowering and hoisting the treadmill inside of the pool.

Aquamotion, Aquamotion Sport
Models for adults. Wide glass doors allow patient on wheelchairs get close to the treadmill. Glass walls allow monitoring the course of training as well as sport exercises. In standard counterflow jats are included - they induce additional resistance during walking. Thanks to the hydraulic drive system, there is no risk of electric shock in the water.

✪ WHY A WATER TREADMILL?

Hydrotherapy is the best method of rehabilitation and fighting overweight.
It allows early intervention and faster recovery of the body. Water resistance improves the whole musculo-skeletal system and reduces joint stiffness. It brings more benefits of work out and improves motility of the musculo-skeletal system. It also reduces pain and increases blood flow.
The natural buoyancy of water lowers the relative body weight, which reduces burden on joints. Therefore, water treadmill work out may be used by patients for which training on a dry treadmill or outdoors is contraindicated or impossible.
The device combines exceptional functionality and compact structure. It may be installed in places where the use of a traditional pool is restricted due to location or costs.

AQUARAY BALNEO-MED INMED

Bathtub for balneological baths

Bathtube for balneological baths AQUARAY Balneo besides the automatic hydromassage and pearl baths also enables brine and carbonic acid baths. The bathtub is made of materials resistant to the influence of aggressive chemical and physical factors, which enables reliable and long-lasting operation under conditions necessary for balneological baths, using brine or CO2-saturated water. In the AQUARAY Balneo depending on version, there are valves for filling with cold and warm brine, thanks to which it is possible to conduct balneological treatments in the form of brine bath. There could be also CO2 filling valve, which supplies CO2- saturated water used for the carbonic acid bath (CO2-saturated water is delivered through filling nozzles located almost at the bottom of the bathtub).

Technical data:

Min. bath level capacity [l]:	160
Capacity up to overflow [l]:	320
Filling* (up to min. bath level)/emptying [min]:	<4/<2,5
Current consumption [A]:	13
Power supply [V/Hz]:	230/~50
Dimensions (L x W x H) [cm]:	225 x 88 x 76
Weight [kg]:	160
Max. patient weight [kg]:	135
Protection class, applied part:	I, type B
Zone hydromassage pump - pressure range [bar]:	1,5 - 2,2

✪ FEATURES

- Basin available in two colours: white or calypso green
- Basin made of gelcoat (fiberglass mat reinforced)
- Use of water – min. 160 l
- 24 hydromassage jets working simultaneously
- Hydromassage intensity adjustment
- 98 aeration apertures for pearl massage (14x7 apertures)
- Automatic disinfection
- Automatic filling
- Quick-fill system at the bottom of the basin
- Automatic emptying
- Automatic rinsing of hydromassage ducts
- Easy accessible colour touch panel
- Water temperature indicator - when filling, the temperature of the pouring water is displayed, otherwise the temperature of the water in the bathtub basin is displayed
- 2 water level sensors
- Shower head
- Rails for palm support and specially shaped parts for arms and legs that facilitate appropriate body position during treatment sessions
- Support for feet

AQUARAY-MED INMED

Therapeutic bathtub for zone hydromassage AQUARAY

Technical data:

Min. bath level capacity [l]:	160
Capacity up to overflow [l]:	320
Filling* (up to min. bath level)/emptying [min]:	<4/<2,5
Current consumption [A]:	22
Power supply [V/Hz]:	230/50
Dimensions (L x W x H) [cm]:	225 x 88 x 80
Weight [kg]:	170 (210 equipped with pump and jet hose)
Protection class, applied part:	I, type B
Zone hydromassage pump - pressure range [bar]:	1,5 - 2,2
Range of jet hose pump pressure changes during Massage intensity adjustment [bar]:	2,4 - 4,7

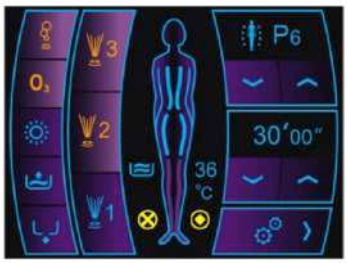

Therapeutic bathtub for zone hydromassage AQUARAY

is a modern therapeutic bathtub characterized by an advanced structure, designed and intended for hydrotherapy treatments. The main function of the AQUARAY bathtub is the automatic zone hydromassage. Hydromassage jets in the AQUARAY bathtub operate in 5, 3 or a single zone depending on the version

FEATURES

- Basin available in two colours: white or calypso green
- Basin made of gelcoat (fiberglass mat reinforced)
- Use of water – min. 160 l
- 24 hydromassage jets working simultaneously
- Hydromassage intensity adjustment
- 98 aeration apertures for pearl massage (14x7 apertures)
- Pearl massage intensity adjustment
- Automatic disinfection
- Automatic filling
- Automatic emptying
- 3 standard programs: P1, P2, P3, user programs (P4–P20)
- Easy accessible colour touch panel
- Water temperature indicator – when filling, the temperature of the pouring water is displayed, otherwise the temperature of the water in the bathtub basin is displayed
- 2 water level sensors
- Shower head
- Rails for palm support and specially shaped parts for arms and legs that facilitate appropriate body position during treatment sessions
- Support for feet

AQUIA DRY HYDROMASSAGE MEMBRANE UNIT-MED INMED

DESIGNED FOR A COMFORTABLE, SOOTHING RELAXATION EXPERIENCE

AQUAI has a wide range of uses in wellness and fitness. It perfectly suits rehabilitation centers. It is also a very good option for relaxation rooms in companies.
A patient in a rehabilitation center or a guest in a SPA center can experience the beneficial power of hydro massage without getting wet. The massage is done through a layer of specially designed membrane.

ADVANTAGES OF THE TREATMENT:

- Improvement in blood circulation and metabolism
- Increase in oxygen transport in muscles
- Improvement in movement range of extremities
- Tension relief
- Stress reduction and relaxation
- Well-being

Easy to get on & off

Comfortable design

BALMED-MED INMED

Bathtub for balneological baths BALMED

Bathtub for balneological baths BALMED is specially designed for balneological treatments – carbonic acid or brine baths, also pearl baths (AIR option) or baths with light effects (CHROMO option). The BALMED bathtub has a quick filling system from the bottom of the basin, which minimizes the release of CO2 from saturation water during the preparation of a carbonic acid bath.

✪ FEATURES

- Basin made of acrylic glass and polyester resins (fibreglass mat reinforced)
- Made of materials resistant to the influence of chemical and physical factors, which allows for reliable and long-term use in conditions necessary for balneological baths using, e.g. brines, sulfur water
- Basin available in two colours: white or calypso green (not available for 2701)
- Large diameter of drain for fast emptying of the bathtub
- Water installation (except for the connections, valves, thermomixer, solenoid valves) is made of PVC which ensures its reliability
- Control panel (only with option AIR 64, CHROMO) (not available for 2701)
- Control panel allows operation of the following modes of operation: Stand-by/ Massage/ CHROMO/ Ducts drying by air being blown through them
- CHROMO without AIR 64 option - is switched on by pressing special button (not available for 2701)
- Shower head
- Up to 3 types of media: water saturated with CO2, warm or cold brine, warm or cold sulfide water
- Capacity dependent on types: STANDARD: 150-300 l, ECO: use of water 140-240 l reducing treatment costs
- Temperature sensor - only in AIR 64 option
- Treatment time setting (1-30 min) - only with AIR 64 option
- Brine or sulphide water, CO2-saturated water - delivered via bottom filling nozzles
- Warm water, cold water - delivered via spout

Technical data:	ECO	STANDARD	
Min. capacity [l]:	140	150	160
Capacity (up to overflow) [l]:	240	300	270
Filling* (up to overflow)/emptying** (from overflow) [min]:	4/2,25	4/2,25	4/2,25
Number of filling nozzles:	2	2	2
Power supply (CHROMO/AIR64) [V/Hz]:	230/~50	230/~50	-
Current consumption [A]:	5	5	-
Protection class, application part:	I, type B	I, type B	I, type B

BATHAID CARE BATHTUB AND HYDRAID BATHTUB HOIST-MED INMED

Specially designed and intended for use in hospitals, nursing homes and long-term care facilities, the Bathaid care bathtub is ideal for bathing and washing patients. The built-in height adjustment feature facilitates personnel to perform hygienic activities related to the daily care of the patient.
Bathaid is a tub designed for patients with reduced mobility due to injury, illness, or disability.

HYDRAID:

- Raising/lowering,
- Mobile,
- Equipped with control panel and manual remote control for height adjustment, • 3-ply lying surface (+ pad),
- Lying surface adjustment,
- With/without weight trend indicator.

✪ FEATURES

- Ergonomic design,
- Profiled bathtub with armrests, made of acrylic; the outer covers are made of gelcoat,
- Automatic siphon, drain closing knob for water discharge,
- Electric lifting and lowering of the bathtub with adjustment in the range of 40 cm,
- Lifting and lowering of the bathtub by means of a fixed panel and a remote control (with access authorisation), which allows the bathtub to be lifted and lowered at two different lifting/lowering speeds,
- Shower head,
- Handles.

BATHAID-MED INMED

Technical data:

Dimensions (L x W) [mm]:	1990 x 800
Height min./max (basin edge) [mm]:	720-1120
Basin depth [mm]:	430
Drain Ø [mm]:	50
Capacity up to overflow [l]:	270
Power supply (PREMIUM Plus) [V, Hz]:	230, 50
Power supply (ECONOMY, PREMIUM) [V, Hz]	230, 50/60
Device weight (ECONOMY/PREMIUM/PREMIUM Plus) [kg]:	210/230/252
Max. patient weight [kg]:	185
Max. safe working load of the bathtub (SWL) [kg]:	400
Max. filling time up to overflow (ECONOMY/ PREMIUM/PREMIUM Plus) (at flow ~70l/min) [min]:	~16/~9,5/~9,5
Max. drainage time of the bathtub basin [min]:	~4
Lifting/lowering time - low-speed actuators (ECONOMY) at SWL 400 kg) [s]:	~50
Lifting/lowering time - high-speed actuators (ECONOMY (option)/ PREMIUM/PREMIUM Plus) at SWL 400 kg [s]:	~30
Min. water level for bathing (PREMIUM/PREMIUM Plus) [l]:	170
Packed dimensions (L x W x H) [cm]:	220 x 100 x 85

✪ BATHAID (STANDARD FEATURES):

- Ergonomic design
- Profiled bathtub with armrests, made of acrylic; the outer covers are made of gelcoat
- Automatic siphon, drain closing knob for water discharge
- Electric lifting and lowering of the bathtub with adjustment in the range of 40 cm
- Lifting and lowering of the bathtub by means of a fixed panel and a remote control (with access authorisation), which allows the bathtub to be lifted and lowered at two different lifting/ lowering speeds
- Shower head
- Handles

CRYOTOTAL-MED IMED

The Cryo Total is designed to deliver the easiest, safest, and most effective whole body cryotherapy treatments. WBC is a three minute treatment that exposes the entire body to extreme temperatures as low as -140ºC in order to promote recovery, performance, wellness, beauty, and weight loss benefits (boost immune system, muscle recovery, pain reduction, stimulation of collagen production in the deeper layers of skin resulting in a smoother, firmer and more youthful look, natural loss of weight, deeper sleep, stress reduction).

✪ FEATURES

- User-friendly, intuituve and streamlined interface displayed on a large 21'' touch screen.
- Window enabling WBC or open PBC (partial) treatment.
- Air flow control.
- Temperature control.
- Oxygen sensor.
- Troubleshooting with Wi-Fi capability.
- Hygenic materials easy to clean.
- High quality speakers to play music and enable audio communication between operator and client.
- 100% breathable air environment.
- More space to move around inside and not feel claustrophobic.
- Safety: the client is never in direct contact with nitrogen vapors - nitrogen is used only as a cooling medium.

Technical data:

Coolant:	cryogenic liquid nitrogen (LIN)
Dimensions (HxWxD) [cm]:	230 x 197 x 125
Temerature in chamber [°C]:	-110 to -140
Liquid nitrogen consumption (depending on duration and temp. of the treatment) [l]:	10-15 per sesion
Power supply [V, Hz]:	230, 50 / 110, 60

EKOPOMPA I –MED INMED

Water supply station EKOPOMPA I is intended to cooperate with the Aquavibron massage device. The EKOPOMPA I, thanks to the closed water circuit, enables economical and ecological dry massage treatments. The dry massage treatment makes use of the pressure of water flowing through the membrane which causes the vibration of the massage head. Another advantage of the closed water circuit is independence from the mains water supply.

✪ FEATURES

- Low water consumption – closed water circuit
- Water pressure in the circuit is maintained by a pump, powered by 230 VAC/50 Hz, working with a water tank
- The inside of the station is additionally cooled by a fan-induced air flow
- Ekopompa uses water stored in a built-in 10 l tank
- Easily connected to the original Aquavibron MEDIMARK device without conversions or modifications hindering its functionality
- Adjustable massage force allows the therapist to set a gentle massaging intensity for more sensitive areas
- Water installation is made of PVC pipes and hoses in acid-resistant steel plating
- Holder for the suspension of the Aquavibron apparatus
- Handle for transportation
- 4 castors (with brakes)
- The residual current device (RCD) inside the EKOPOMPA I station
- Suitable for use in rehabilitation centers and sanatoriums

Technical data:

Water tank capacity min./max. [l]:	7/10
Current consumption [A]:	3
Power supply [V/Hz]:	230/50
Dimensions (L x W x H) [mm]:	61 x 50 x 88
Weight (empty) [kg]:	40
Protection class:	I

FOUR-CELL BATH-GI-VZ-MED INMED

The treatment options in a four-cell bath are numerous:

- GALVANIC BATHS GI-VZ (microprocessor-control GI-VZ for single and multiple cell treatment)
- KNEIPP-STYLE CONTRAST BATHS (The cells are filled with water of differing temperatures. Kneipp therapy involves immersing the arms and legs in the water. Manually regulated rising temperature baths can also be administered).
- CONTRAST BATH TREATMENT WBS (option)

FEATURES

- Compact design with arm tubs mounted on swivelling brackets, cladding with height-adjustable feet and inspection door
- The appliance is made of glass fibre reinforced plastic and is heat-resistant and acid-proof
- 2 electrodes made of stainless steel for the arm tubs with connector socket and connection cable with strain relief
- 2 integrated electrodes made of stainless steel for the foot tubs with permanently installed lines
- Integrated, micro-processor controlled electrical element with 4 impulse currents for single and multiple cell treatments:
- Numeric display of currents and voltages, separate for galvanic and impulse current
- Membrane keypad for easy operation with icons that are easy to understand
- 2timerkeys,individuallyadjustable,withautomaticswitch-off (1-30 min.)
- Functional keys ON, OFF, START and many buttons (e.g. for selection of polarity)
- Colour: bathtub (according to colour chart); cladding (white)

Microprocessor-controlled electrical element GI-VZ

Technical data:

Supply voltage [V AC]:	24
Power consumption [W]:	80
Output voltage (galv./pulsed current) [V DC/V AC]:	0-24/0-7
Output current (galv./pulsed current) [A DC/mA, AC]:	0-2/0-300

HYDRAID-MED INMED

The bathtub hoist Hydraid, with height adjustment, is designed for use in hospitals, sanatoriums and nursing homes.
It is used for lifting, transferring and bathing persons with reduced mobility due to illness or disbility. It allows the caregiver to transfer the patient from the bed directly into the bathtub and back again. It can be operated by one person, giving the caregiver more ergonomy.

FEATURES

- Raising/lowering
- Mobile
- Equipped with a control panel and a manual remote control for height adjustment
- 3-ply lying surface (+pad)
- Adjustment of the lying sections
- With or without patient weight trend tracking module

Technical data:

Dimensions (when seated) (L x W x H (min./max.)) [mm]:	970 x 760 x 1240/1840
Dimensions (when lying) (L x W x H (min./max.)) [mm]:	970 x 1840 x 1240/1840
Lying surface dimensions (L x W) [mm]:	430 x 1840
Seat width [mm]:	435
Grip height [mm]:	1190
Turning diameter [mm]:	1150
Wheels diameter (with/without brake) [mm]:	125/100
Input woltage [V, Hz]:	100-240, 50-60
Battery capacity [Ah]:	2,9
Device weight [kg]:	95
Max. safe working load when lying [kg]:	160
Max. safe working load when seated [kg]:	180
Lifting/lowering time [s]:	42/35

JET SHOWER NBC1,NBC2, NBC2E-MED INMED

Jet shower ORKAN type: NBC1, NBC2, NBC2E is designed to conduct hydrotherapy treatments using a stream of water. The water stream, properly profiled by means of special nozzles, is directed at the patient. It is also possible to dynamically change the temperature of hot-cold water, which guarantees the appropriate effects of the therapy.

JET SHOWER ORKAN TYPE NBC1 FEATURES:

- Free-standing console (permanently installed), made of composite material
- Water system consists of copper tubes and hoses braided with acid-resistant steel.
- 2 massage nozzles for jet showers
- 2 manometers for pressure indications (independent for each nozzle)
- 2 thermometers for temperature indications (independent for each nozzle)
- Water dispersion adjustment via a sprinklers (independent for each nozzle)
- The massage nozzles (with forearm supports) rotatable within the treatment area
- 2 thermostatic mixing valves for independent temperature adjustment for the two nozzles
- The ability to work with two nozzles at the same time
- 2 pressure (water stream intensity) adjustment or shut-off valves (independent for each nozzle)
- The nozzles equipped with a lever that opens the stream of water and with a lock allowing for continuous jet shower)
- 4 adjustable feet for leveling the device

JET SHOWER ORKAN TYPE NBC2 FEATURES:

- Free-standing console (permanently installed), made of composite material
- Water system consists of copper tubes and hoses braided with acid-resistant steel. The external hoses are selected to meet strict operational requirements
- Thermostatic mixer knob for smooth warm water temperature control
- Thermostatic mixer knob for smooth cold water temperature control
- Quick water temperature adjustment lever allowing for switching between warm water and cold water from the thermostates
- Manometer, thermometer
- 3 rubber hoses with nozzles (for pouring, for concentrated and diffused stream of water)
- 3 pressure adjustment or shut-off valves (independent for each hose) • 4 adjustable non-slip feet for leveling the device

JET SHOWER ORKAN TYPE NBC2E FEATURES:

- Free-standing console (permanently installed), made of composite material
- With pump which switches on when the pressure decreases below 1.3 bar, and switches off when the pressure exceeds 3.3 bar
- Permanently connected to the electrical installation
- Water system consists of copper tubes and hoses braided with acid-resistant steel. The external hoses are selected to meet strict operational requirements
- Thermostatic mixer knob for smooth warm water temperature control
- Thermostatic mixer knob for smooth cold water temperature control
- Quick water temperature adjustment lever allowing for switching between warm water and cold water from the thermostates
- Manometer, thermometer
- 3 rubber hoses with nozzles (for pouring, for concentrated and diffused stream of water)
- 3 pressure adjustment or shut-off valves (independent for each hose) • Power-on and pump operation indicator lights
- Power switch of the pump
- 4 adjustable non-slip feet for leveling the device

Technical data:

Warm/cold water pressure [bar]:	4-6
Warm water temperature [°C]:	max. 60
Mixed water temperature [°C]	at least 2° lower than warm water temp.
Power supply (applicable to NBC2E) [V/Hz]:	230/50
Current consumption (applicable to NBC2E) [A]:	4
Dimensions NBC1 (H x W x L) [cm]:	111 x 64 x 54
Dimensions NBC2 (H x W x L) [cm]:	99 x 69 x 58
Diamensions NBC2E (H x W x L) [cm]:	99 x 72 x 59

ORIONMED BALNEO-MED INMED

Bathtube for balneological baths ORIONMED Balneo besides the automatic hydromassage and pearl baths also enables the brine and carbonic acid baths. The bathtub is made of materials resistant to the influence of aggressive chemical and physical factors, which allows for reliable and long-lasting operation in conditions necessary to conduct balneological baths with the use of brine waters.

Technical data:

Min. bath level capacity [l]:	160
Capacity up to overflow [l]:	320
Filling* (up to min. bath level)/emptying [min]:	<2/<4
Current consumption [A]:	14
Power supply [V/Hz]:	~230/50
Dimensions (L x W x H) [cm]:	214 x 85 x 85
Weight (empty) [kg]:	160
Protection class, applied part:	I, type B

✪ FEATURES

- Basin available in two colours: white or calypso green
- Basin made of acrylic (fibreglass mat reinforced) - saline influence-resistant
- Use of water: (160-320 l)
- 26 nozzles for hydromassage without zones (all nozzles work simultaneously)
- Colour touch panel
- Treatment time: up to 30 min
- Dry-run" pump protection system
- Disinfection and descaling system
- Automatic filling, emptying
- Quick filling system at the bottom of the basin
- Automatic rising of hydromassage ducts
- Drying of air ducts
- During the filling there is displayed the temperature of poured water
- Special pump and fittings elements adapted to saline waters
- Rails for palm support and specially shaped parts for arms and legs that facilitate appropriate body position during treatment sessions
- Shower head
- 2 water level sensors

ORIONMED-MED INMED

Therapeutic bathtub for zone hydromassage ORIONMED of advanced design is particularly dedicated for the hydrotherapy treatments. The main functions of the bathtub ORIONMED are automatic zone hydromassage and pearl baths. Also there is possible to perform manual whip underwater massage, baths with light effects and aroma baths. In default, the bathtub enables the conducting of relaxing and healing hydromassage of the whole body.

Technical data:

Min. bath level capacity [l]:	160
Capacity (up to overflow) [l]:	320
Filling* (up to min. bath level)/emptying [min]:	<4/<4
Current consumption [A]:	25
Water jet hose pressure [bar]:	0-3,5
Power supply [V/Hz]:	~230/50
Dimensions (L x W x H) [cm]:	214 x 85 x 85
Weight (empty) [kg]:	170/195 (equipped with pump and jet hose)
Protection class, applied part:	I, type B

✪ FEATURES

- Basin available in two colours: white or calypso green
- Basin made of acrylic (fibreglass mat reinforced)
- Use of water – min. 160 l, max. 320 l
- 26 nozzles for hydromassage divided into 3 independent zones (8, 8, 10 nozzles)
- 126 aeration nozzles for air bubble massage (with intensity adjustment)
- Massage intensity adjustment by supplying air to the nozzles indepently for each zone
- Treatment time: up to 30 min
- Ozonator
- Independent air pump
- Disinfection and descaling system
- Automatic filling
- Semi-automatic drainage - water discharge lever
- Dry-run" pump protection system
- Drying of air ducts
- Easy accessible colour touch panel
- During the filling there is displayed the temperature of the poured water
- Selection of the requested bath temperature within a 30 - 40°C range
- Heater sustaining water temperature during the treatment
- Shower head
- Rails for palm support and specially shaped parts for arms and legs that facilitate appropriate body position during treatment sessions
- 2 water level sensors
- 3 standard programs: P1, P2, P3, 1 user program (P4)

RING SHOWERS-MED INMED

RING SHOWER BRYZA, TYPE: NPL2, NPLE

Ring shower BRYZA, type: NPL2, NPLE is designed for rain and lateral showers. It is a procedure in which the pressure and temperature of many streams of water, which hit the patient's body at the same time, have a fundamental influence. The shower structure is made of stainless steel pipes, from which water flows out under the appropriate pressure through small openings. The temperature of the hot and cold water flowing out is controlled by a temperature mixer. The shower control is performed using the console.

Technical data:

Cold and warm water pressure [bar]:	5-6
Warm water temperature [°C]:	max. 60
Power supply (applicable to NPLE [V/Hz]:	230/50
Power consumption (applicable to NPLE) [W]:	max. 25
Power consumption (version with PUMP) [W]:	800
Dimensions NPL2 (H x W x L) [cm]:	94 x 64 x 42
Dimensions NPLE (H x W x L) [cm]:	94 x 64 x 42
Dimensions shower frame (H x W x L) [cm]:	226 x 89 x 95

✪ BRYZA type NPLE* features:

- Free-standing console (permanently installed) made of composite material
- Water installation made of copper pipes and flexible hoses
- Independent smooth temperature adjustment via 2 thermomixer knobs: for warm and for cold water
- Quick changes of temperature between cold and warm water (2 electrovalves)
- Electronic control panel with temperature indication
- Console has to be permanently connected to the electric system
- 3 standard programs, 4 user programs
- Program switches two valves on and off. One valve controls the flow of warm water and the other one - cold water (these valves are never switched on simultaneously). Switching of the valves takes place in cycles. Each cycle consists of two stages: 1 - warm water, 2 - cold water. The number of cycles can be set by the user between 1 and 7. Can be set any duration for each cycle. For warm water the time is set in minutes (from 0 to 99) and for cold water in seconds (from 0 to 99).
- Compensation tank for reduction of small water pressure fluctuations in the water system (with PUMP option)

✪ BRYZA type NPL2 features:

- Free-standing console (permanently installed) made of composite material
- Water installation made of copper pipes and flexible hoses
- Independent smooth temperature adjustment via 2 thermomixer knobs: for warm and for cold water
- Valve for quick change of water temperature (mixing valve), used for quick warm water - cold water change with the possibility of adding warm water to cold water if the cold water temperature is too low
- Valve to regulate pressure and cut off the water
- Thermometer

JET SHOWER ORKAN TYPE: NBC1, NBC2, NBC2E

Jet shower ORKAN type: NBC1, NBC2, NBC2E is designed to conduct hydrotherapy treatments using a stream of water. The water stream, properly profiled by means of special nozzles, is directed at the patient. It is also possible to dynamically change the temperature of hot-cold water, which guarantees the appropriate effects of the therapy.

NBC1

NBC2E

✪ Jet shower ORKAN type NBC1 features:

- Free-standing console (permanently installed), made of composite material
- Water system consists of copper tubes and hoses braided with acid-resistant steel.
- 2 massage nozzles for jet showers
- 2 manometers for pressure indications (independent for each nozzle)
- 2 thermometers for temperature indications (independent for each nozzle)
- Water dispersion adjustment via a sprinklers (independent for each nozzle)
- The massage nozzles (with forearm supports) rotatable within the treatment area
- 2 thermostatic mixing valves for independent temperature adjustment for the two nozzles
- The ability to work with two nozzles at the same time
- 2 pressure (water stream intensity) adjustment or shut-off valves (independent for each nozzle)
- The nozzles equipped with a lever that opens the stream of water and with a lock allowing for continuous jet shower)
- 4 adjustable feet for leveling the device

✪ Jet shower ORKAN type NBC2E features:

- Free-standing console (permanently installed), made of composite material
- With pump which switches on when the pressure decreases below 1.3 bar, and switches off when the pressure exceeds 3.3 bar
- Permanently connected to the electrical installation
- Water system consists of copper tubes and hoses braided with acid-resistant steel. The external hoses are selected to meet strict operational requirements
- Thermostatic mixer knob for smooth warm water temperature control
- Thermostatic mixer knob for smooth cold water temperature control
- Quick water temperature adjustment lever allowing for switching between warm water and cold water from the thermostates
- Manometer, thermometer
- 3 rubber hoses with nozzles (for pouring, for concentrated and diffused stream of water)
- 3 pressure adjustment or shut-off valves (independent for each hose)
- Power-on and pump operation indicator lights
- Power switch of the pump
- 4 adjustable non-slip feet for leveling the device

✪ Jet shower ORKAN type NBC2 features:

- Free-standing console (permanently installed), made of composite material
- Water system consists of copper tubes and hoses braided with acid-resistant steel. The external hoses are selected to meet strict operational requirements
- Thermostatic mixer knob for smooth warm water temperature control
- Thermostatic mixer knob for smooth cold water temperature control
- Quick water temperature adjustment lever allowing for switching between warm water and cold water from the thermostates
- Manometer, thermometer
- 3 rubber hoses with nozzles (for pouring, for concentrated and diffused stream of water)
- 3 pressure adjustment or shut-off valves (independent for each hose)
- 4 adjustable non-slip feet for leveling the device

Technical data:

Warm/cold water pressure [bar]:	4-6
Warm water temperature [°C]:	max. 60
Mixed water temperature [°C]	at least 2° lower than warm water temp.
Power supply (applicable to NBC2E) [V/Hz]:	230/50
Current consumption (applicable to NBC2E) [A]:	4
Dimensions NBC1 (H x W x L) [cm]:	111 x 64 x 54
Dimensions NBC2 (H x W x L) [cm]:	99 x 69 x 58
Diamensions NBC2E (H x W x L) [cm]:	99 x 72 x 59

THERAPEUTIC BATHTUB AQUANEA-MED INMED

Therapeutic bathtub for zone hydromassage AQUANEA is a modern bathtub, specially designed and intended to perform hydrotherapy treatments. The main function of the bathtub is automatic zone hydromassage, activated from any selected zone of massage nozzles.

Technical data:

Capacity [l]:	160-240
Volume up to overflow [l]:	275
Filling* (up to overflow)/emptying [min]:	<4/<4
Current consumption [A]:	10
Power supply:	400 V ~3 N 50 Hz
Dimensions (L x W x H) [cm]:	240 x 115 x 85
Weight [kg]:	220 ± 15 (full set)
Protection class:	I

FEATURES

- Basin available in two colours: white or calypso green
- Basin made of poliester resins (fiberglass mat reinforced)
- Use of water – min. 160 l, max. 240 l,
- 188 hydromassage nozzles working simultaneously
- 62 aeration nozzles with intensity adjustment
- Hydromassage intensity adjustment
- Ozone generator
- Automatic disinfecting and descaling system
- „Dry-run" pump protection system
- Automatic water canal's rinsing
- Automatic filling with a termostatic mixer
- Automatic emptying
- Temperature measurment during filling the bathtub and during the treatment
- Water level sensor
- Treatment time: up to 30 min
- Multifunctional electronic control panel with easily accesible menu
- Shower head
- One button start

UNDERWATER MASSAGE BATHTUB-MED INMED

Underwater massage bathtub AQUAMEDEN is a bathtub specially designed and intended for performance of underwater massage treatment using the built-in hose or nozzles.

Technical data:

Treatment capacity (minimum) [l]:	350
Capacity (up to overflow) [l]:	500
Filling (up to overflow)/emptying [min]:	6,0/4,5
Jet hose water pressure [bar]:	0-4,5
Current consumption [A]:	12
Power supply [V/Hz]:	230/~50
Dimensions (L x W x H) [cm]:	232 x 100 x 93
Basin edge H [cm]:	86
Weight (empty) [kg]:	230 (fully equipped)
Protection class, applied part:	I, type B

FEATURES

- Basin available in two colours: white or calypso green
- Basin made of high quality deep hot drawn acrylic glass
- Jet hose for underwater massage with 7 mm diameter nozzle
- Interchangeable nozzle tips for the jet hose (option)
- Pressure indicator (up to 4,5 bar)
- Optional hydromassage: 8 side direction jet nozzles + 3 direction jet nozzles for back
- Hydromassage intensity adjustment by supplying air to the nozzles with the aeration knob
- „Dry-run" pump protection system
- Electronic control panel
- Water level sensor
- Water system made at copper and PVC pipes (except connectors and valves)
- Automatic water installation disinfection system
- On display is indicated the time left for massage completion alternately with water temperature
- Railings and feet supports helping to maintain proper body position during treatment
- Shower

THERMOTHERAPY MASS HEATING DEVICES-MED INMED

✪ Features F-40, F-40/B, B-85L, B-130L, B-200L:

- Used materials are resistant to corrosion (stainless steel)
- Equipped with an automatic mixing arm, which is started every few minutes for even maintenence of temperature and suitable consistency of the mass in the container
- Construction of the tank in a heat-insulating coating reduces electricity consumption (F-40, F-40/B)
- Pouring the mass from the tank through a special valve, without a need for using a scoop
- Microprocessor-controlled electronics
- Consists of a tank with a cover
- Drain valve of the tank is heated, which prevents the mass from congealing (F-40)
- The mixing arm drive is stopped automatically when the cover is lifted
- Adjustment of temperature
- Portable control panel
- Oil jacket (B-85L, B-130L and B-200L) - very low energy consumption
- Permanently connected to the power supply
- Wheels with a lock, which enable to move and lock the device in the right work place (B-85L, B-130L, B-200L)

✪ Features C-14:

- For storing mass on trays placed inside the heating unit
- Heater with a fan keeps the present temperature
- Microprocessor-controlled electronics and portable control panel
- Used materials are resistant to corrosion (stainless steel)

Technical data:

	F-40 (for fangoparaffin)	F-40 (for paraffin)	F-40/B	B-85L	B-130L	B-200L	C-14
Temperature range [°C]:	55-80	55-80	30-60	30-60	30-60	30-60	25-80
Working volume of container [l]:	40	40	40	85	130	200	14 trays (40 x 60 x 2 cm)
Sterilization temperature [°C]:	130	110	-	-	-	-	-
Power supply [V/Hz]:	400 3N/50	400 3N/50	400 3N/50	400 3N/50	400 3N/50	400 3N/50	230/50/60
Dimension (L x W x H) [cm]:	66 x 64 x 74	66 x 64 x 74	66 x 64 x 74	97 x 76 x 118	109 x 86 x 132	120 x 97 x 132	76 x 70 x 80
Weight [kg]:	90	90	90	300 (with oil inside)	360 (with oil inside)	380 (with oil inside)	100

UNDERWATER MASSAGE BATHTUB-MED INMED

VICHY-RAINBOW-SHOWER, type VRD (AW7400) is for people in a supine or prone position. The treatment quality of the shower jets can be enhanced by adding coloured light, using Swarovski-Crystals or bath additives, such as salts or nurturing oils.

Technical data (Shower AW7400):

Dimensions (L x W x H) [cm]:	approx. 130 x 65 x 117
Electric supply [V/Hz, W]:	230/50, 100

FEATURES

- 150-250 litres of water per treatment, which is the same as for a bath.
- The shower head equipped with micro nozzles assembled in 2 rows; swaying back and forth is showering the body from the feet up to the neck.
- Very fine water jets massage the body simulating sea waves, a gentle rain shower or intensely stimulating drops.
- By admixing agents (such as dissolved salt or nurturing oils), the well-feeling can even be increased.
- The water is flowing over sparkling Swarovsky crystals, which diffuse the flicker-free LED colour light on the body.
- Control panel: with the control, the duration of the treatment, the admixture of additives/ salts and the disinfection is regulated; a thermostatic mixer with scald protection provides more security; by means of the hand key, the guest can integrate individual short cold shower phases into the treatment – they have a stimulating effect on the circulation.

VICHY- SHOWER MED INMED

Technical data (Shower AW7452):

Two-piece case dimensions (L x W x H) [cm]:	85 x 66 x 24,6
Shower arm lenght [cm]:	180,5

Technical data (table AW7422):

Dimensions (L x W x H) [cm]:	approx. 209 x 80 x 80
For request, in the following heights available [cm]:	70 / 75 / 85 / 90

Technical data (Shower AW7451):

Two-piece case dimensions (L x W x H) [cm]:	85 x 66 x 24,6
Shower arm lenght [cm]:	180,5

Technical data (mattress ZW7423):

Dimensions (L x W x H) [cm]:	approx. 160 x 49 x 2

WHIRL MASSAGE DEVICE WKD-MED INMED

Whirl massage device type WKD is designed for hydrotherapy treatments with a pump-induced water stream. The whirl massage causes hyperemia, reduces swelling and venous blood stasis, while having an analgesic and muscle relaxing effect. For use in professional healthcare facilities, such as hospitals, clinics, etc.

Technical data:

Min. working capacity [l]:	120
Max. working capacity (up to overflow) [l]:	160
Filling* (up to max. bath level)/emptying [min.]:	3/2
Number of nozzles:	6
Current consumption [A]:	5
Power supply [V/Hz]:	230/~50
Dimensions (L x W x H) [cm]:	117 x 62 x 81
Weight (empty) [kg]:	55
Protection class, applied part:	I, type B

✪ FEATURES

- Basin available in two colours: white or calypso green
- Basin made from gelcoat (fibreglass mat reinforced)
- Use of water – min. 120 l (all nozzles immersed)
- Whirl massage via 6 adjustable direction jet nozzles
- „Dry-run" pump protection system
- Massage intensity adjustment by supplying air to the jet nozzles
- Electronically controlled descaling system
- Electronic control panel
- Treatment time: max. 30 min
- Temperature sensor
- Water level sensor
- Automatic filling
- Emptying by means of drain knob
- Shower head
- Profiled treatment chamber

WHIRL MASSAGE DEVICE WKR-MED INMED

Whirl massage device type WKR is designed for hydrotherapy treatments with a pump-induced water stream. The whirl massage causes hyperemia, reduces swelling and venous blood stasis, while having an analgesic and muscle relaxing effect. For use in professional healthcare facilities, such as hospitals, clinics, etc.

Technical data:

Working capacity (lower limbs/spine) [l]:	75/165
Max. working capacity (up to overflow) [l]:	210
Filling* (up to max. bath level)/emptying [min.]:	2,5/4
Number of nozzles:	12
Current consumption [A]:	7
Power supply [V/Hz]:	230/~50
Dimenssions (L x W x H) [cm]:	117 x 68 x 95
Weight (empty) [kg]:	75
Protection class, applied part:	I, type B

✪ FEATURES

- Basin available in two colours: white or calypso green
- Basin made from gelcoat (fibreglass mat reinforced)
- Use of water – min. 75 l (lower limb massage zone)
- Whirl massage via 12 adjustable direction jet nozzles
- 2 zones of massage: I: lower limbs (75 l), II: spine (165 l)
- „Dry-run" pump protection system
- Massage intensity adjustment by supplying air to the jet nozzles
- (independently for each zone)
- Electronically controlled descaling system
- Electronic control panel
- Treatment time: max. 30 min
- Temperature sensor
- Water level sensor
- Automatic filling
- Emptying by the means to drain knob
- Shower head
- Profiled treatment chamber

WHIRL MASSAGE DEVICE WKS-MED INMED

Whirl massage device type WKS is designed for hydrotherapy performed by means of a stream of water generated by the pump. Whirl massage results in hyperemia, decreased oedema, reduced venous blood stasis, accompanied by analgesic effect and muscles relaxation. For use in professional healthcare facilities, such as hospitals, clinics, etc.

FEATURES

- Basin available in two colours: white or calypso green
- Basin made of acrylic (fibreglass mat reinforced)
- Use of water – min. 45 l (all nozzles immersed)
- Whirl massage via 38 nozzles
- Adjustable air supply system for the nozzles
- „Dry-run" pump protection system
- Electronically controlled descaling system
- Electronic control panel
- Treatment time: max. 30 min
- Big diameter drain and filling system
- Emptying by the means of drainage valve
- Temperature sensor
- Water level sensor
- Shower head
- Profiled treatment chamber
- Automatic filling (option)

Technical data:

Min. working capacity [l]:	120
Max. working capacity (up to overflow) [l]:	160
Filling* (up to max. bath level)/emptying [min.]:	3/2
Number of nozzles:	6
Current consumption [A]:	5
Power supply [V/Hz]:	230/~50
Dimensions (L x W x H) [cm]:	117 x 62 x 81
Weight (empty) [kg]:	55
Protection class, applied part:	I, type B

WHIRL MASSAGE DEVICE WKG-MED INMED

Whirl massage device type WKG is designed for hydrotherapy performed by means of a stream of water generated by a pump. Whirl massage results in hyperemia, decreased oedema, reduced venous blood stasis, accompanied by analgesic effect and muscles relaxation. For use in professional medical care facilities, such as hospitals, clinics, etc.

FEATURES

- Basin available in two colours: white or calypso green
- Basin made of acrylic (fibreglass mat reinforced)
- Use of water – min. 37 l (all nozzles immersed)
- Whirl massage via 44 nozzles
- „Dry-run" pump protection system
- Adjustable air supply system for the nozzles
- Electronically controlled descaling system
- Treatment time: max. 30 min.
- Electronic control panel
- Big diameter drain
- Filling by the means of filling valve
- Upper water filling
- Emptying by the means of drainage valve
- Temperature sensor
- Water level sensor
- Shower head
- Profiled treatment chamber
- Automatic filling (option)
- Thermostatic valve (option)

Technical data:

Min. working capacity [l]:	37
Max. working capacity (up to overflow) [l]:	47
Filling (up to overflow)/emptying [s]:	50/60
Number of aeration nozzles:	44
Current consumption (max.) [A]:	5
Power supply [V/Hz]:	230/50
Dimensions (L x W x H) [cm]:	88 x 94 x 92
Weight (empty) [kg]:	60
Class protection, applied part:	I, type B

THERMOTHERAPY UNIT-FIZYOMED

Creates an whirlpool treament system giving a liquid like feeling, mixing solid and gas materials. With its unique treatment style, in a dry enviroment that avoids rash and discomfort to the patient. Increases blood flow and also the metabolizma thus speeding up the treatment and recovery time for the patient.

TEKNIK ÖZELLIKLER / TECHNICAL SPECIFICATION	
Güç Girişi / Power Supply	220-240 V 50/60 Hz
Güç Tüketimi / Power Consumption	2600 W
Boyu / Length	87 cm
Eni / Width	41 cm
Yükseklik / Heigth	80 cm
Tedavi Süresi / Treatment Time	1-99 dk / min
Tedavi Modu / Treatment Mod	Sürekli ve Kesikli / Continuous and Pulssed
Tank Kapasitesi / Tank Capacity	14 kg
Sıcaklık / Temperature	31 - 54
Tedavi Giriş Penceresi / Treatment Entry Window	5
Sigorta / Fuce	16 Amp
Yaklaşık Ağırlığı / Approx. Weigth	35 kg
Sınıf Beyanı / Class Declaration	class II B
Sertifikalar / Certificates	EN ISO 13485 : 2016
	CE 1984

09

Traction & Decompression Therapy

TRACTION THERAPY FERROX

✪ HIGHLIGHTS

1. **Art. 250159 -** Wall bar mountable PULLEY **THERAPY RETURN-**ROPE ELEMENT**
2. **Art. 250309 -** ANKLE SUPPORT**
3. **Art. 240360-** WOODEN GRIP HANDLE **
4. **PVC SAND BAG WITH EYELET ****
   Art. 250090-kg 0,5
   Art. 250100-kg 1
   Art. 250110-kg 2
   Art. 250120-kg 3
   Art. 250130-kg 4
   Art. 250140-kg 5
   Art. 250150-kg 6
5. **Art. 240320 -** SNAPE HOOK FOR THERAPY **PULLEY****
6. **Art. 240340 -** OPEN PULLEY **
7. **Art. 240330-**SPRING CLIP **
8. **Art. 240310-** NYLON ROPE **
9. **Art. 240390-**HEEL SUPPORT WITH HOOK **
10. **Art. 250024 -** PAIR OF ANKLE SUPPORT **
11. **Art. 250025-**TRACTION LEG SUPPORT **
12. **Art. 240370-**WRIST SUPPORT WITH HOOK **
13. **Art. 240380 -** ANKLE SUPPORT WITH HOOK **
14. **Art. 250070 -** LEATHER CHIN SUPPORT **, **without metal bow holder**
15. **Art. 250088 -** SPREADER BAR **
16. **Art. 250080-**IMITATION LEATHER CHIN **SUPPORT **, without metal bow holder**

TRACTION THERAPY FERROX

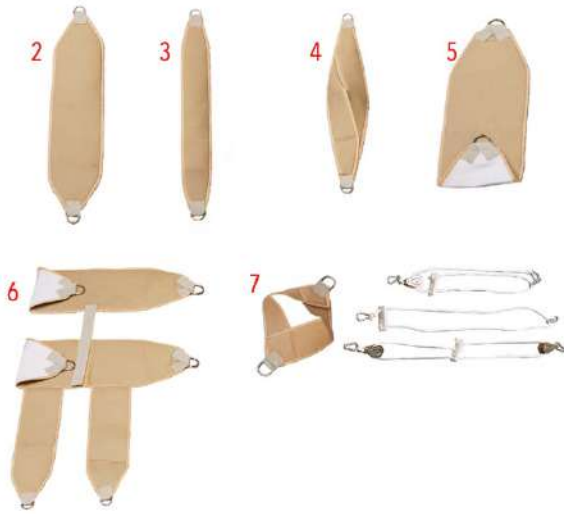

(1) Art. 111810-WALL BAR BENCH **
- adjustable height range 35 □ 55 cm
- dimensions 60 x 30 cm

(KITA) Art. 112242 - ACCESSORY KIT ** equipped with:
- rope with 2 handles
- 2 stainless steel open pulleys
- 1 chin support with metal bow holder

(KIT B) Art. 112243-"PLUS" ACCESSORY KIT ** equipped with:
- 6 m rope
- 2 handles
- 2 open pulleys
- 2 spring clips • 2 ankle supports

(2) Art. 250306 - LEGS**
(3) Art. 250307-ARMS **
(4) Art. 250301 - HEAD **
(5) Art. 250305 - PELVIS **
(6) Art. 250300-COMPLETE HARNESS **
(7) Art. 250310-HEEL SUPPORT **
(8) Art. 250302-PULLEY THERAPY ROPE **
(9) Art. 250303 - PULLEY THERAPY ROPE **
(10) Art. 250304 - PULLEY THERAPY ROPE **

TRACTION ACCESSORY FISIOTECH

SAFETY MAGNET - Code 1214050
Removing the magnet all electrical regulation functions are prevented. This avoids any accidental activation of the actuators.

SAFETY DOUBLE CLICK WITH MAGNET - Code 1214060
A software that allows the movement of the actuators only through a double input of the control. This avoids any accidental activation of the actuators.

SWISS PLUG - Code 1214070

UK 3-PIN PLUG - Code 1214071

TRACTION MACHINE HAOBRO

HB-QY3

PRODUCT PRINCIPLE

The traction force feedback control method is adopted to feed back the parameters input by the operator to the control system to increase and reduce the force in real time,thus realizing the longitudinal traction of the patient's cervical, the longitudinal traction or three dimensional traction, longitudinal traction/rotate traction/forming angle traction, of the patient's lumbar spine.

PRODUCT FEATURES

1. The device can be used in 8 built-in traction modes (continuous, intermittent, and repeated)
2. The device is provided with emergency protection measures
3. Automatic traction compensation function
4. Shoulder and neck heating function
5. Multi-dimensional and multifunctional traction: longitudinal
6. traction, rotary traction, and angle traction
7. Controlled by computer host, in which cases can be stored

HB-QY4

TECHNICAL SPECIFICATIONS

HB-QY1	HB-QY3	HB-QY4
Cervical traction	Cervical traction	/
/	Lumbar traction	Lumbar traction
/	/	Three dimensional traction of lumbar spine (longitudinal traction/rotate traction /forming angle traction)

MANUTHERA 242-LOJER

10

Assistive Devices & Consumables

MOBILITY AID FERROX

✪ HIGHLIGHTS

1. **Art. 270110 – NON-FOLDING WALKING FRAME**
   - Adjustable height 74 cm Δ 91 cm
   - Medical device
2. **Art. 270100 – FOLDING WALKING FRAME**
   - Adjustable height 77 CM Δ 92 cm
   - Medical device
3. **Art. 270070 – FOLDING WALKING FRAME with axillary supports for ambulation**
   - Adjustable height 117 cm Δ 144 cm
   - Medical device
4. **Art. 270080 – Padded seat applicable only on walker Art. 270070**
   - Medical device
5. **Art. 270050 – TRIPOD CANE**
   - 10 different height adjustments 75 cm Δ 103 cm
   - Medical device
6. **Art. 270060 – TETRAPOD CANE**
   - 10 different height adjustments 75 cm Δ 104 cm
   - Medical device

CRUTCH

7. **Art. 270010 – WITH SHOCK ABSORBER**
   - Adjustable height 67 cm Δ 100 cm
   - Medical device
8. **Art. 270020 – WITH SHOCK ABSORBER**
   - Adjustable height 62 cm Δ cm 95 cm
   - Medical device

AXILLA CRUTCH

9. **Art. 270030 – WITH SHOCK ABSORBER**
   - Adjustable height 122 cm Δ 147 cm
   - Medical device
10. **Art. 270040 – WITH SHOCK ABSORBER**
    - Adjustable height 117 cm Δ 145 cm
    - Medical device

ORTHOPAEDIC AIDS

Code 1712110

Code 1712150

WALKER – CODE 1712110

Big foldable walker with four swivel castors, of which two with total brake. Equipped with height-adjustable underarm supports.

TECHNICAL SPECIFICATIONS	
Height adjustment	78 – 95 cm
Underarm support height adjustment	112-145 cm
Length	72 cm
Width	55 cm
Castors dimensions	8 cm
Max load	150 kg

ROLLATOR – CODE 1712150

Blue varnished steel foldable Rollator walker. The Rollator walker is equipped with seat, lever brake, basket, tray, and cane holder

TECHNICAL SPECIFICATIONS	
Height adjustment	**80-98 cm**
Length	70 cm
Width	62 cm
Upholstered polyurethane seat	L 43 x h 62 cm
Pivoting front castors dimensions	20 x 5 cm
Rigid rear castors dimensions	20 x 5 cm
Weight	12 kg
Max load	150 kg

ORTHOPAEDIC AIDS

Code 1711010

Code 1712010

Code 1712020

CRUTCHES – CODE 1711010

Grey varnished aluminium alloy crutches. Fixed arm support in thermoplastic material. Plastic handle with reflector. Nonslip, stain-resistant rubber stopper.
Package 1 pair.
Height adjustable on 10 levels.

TECHNICAL SPECIFICATIONS	
Min/max height ground to handle	68,5-91 cm
Height handle to arm support	24 cm
Weight	0,45 kg
Max load	150 kg

WALKER WITH FOUR STOPPERS – CODE 1712010

Foldable aluminium alloy walker. With four stoppers.

TECHNICAL SPECIFICATIONS	
Height adjustment	80 – 95 cm
Length	45 cm
Width	55 cm
Weight	2,5 kg
Max load	110 kg

WALKER WITH TWO STOPPERS AND TWO CASTORS – CODE 1712020

Foldable aluminium alloy walker.
With two stoppers and two rigid castors.

TECHNICAL SPECIFICATIONS	
Height adjustment	80 – 95 cm
Length	45 cm
Width	55 cm
Weight	2,5 kg
Max load	110 kg

ELECTRIC AND MANUAL WHEELCHAIR

Fully Automatic Intelligent Reclining Wheelchair

Intelligent Long Endurance Reclining Electric Wheelchair

Medical Use Long Endurance, Adjustable Electric Wheelchair

Intelligent Reclining Folding Motorized Electric Wheelchair

Multi-functional Waterproof Aluminum Alloy Frame Wheelchair

Lightweight Manual Reclining Wheelchair

Foldable Lightweight Steel Manual Wheelchair

Electric Standing Handicapped Wheelchair

ORTHOTIC STABILIZATION AND IMMOBILIZATION BRACES

Double Upright OA Knee Brace Osteoarthritis leg support

Pediatric T-scope post op knee brace patella stabilizer

Post op T-scope ROM hip abduction brace with flexion and extension limitation

Orthopedic fracture walker AIR ankle walking boot for foot stabilization

Dual OA knee braces double upright hinges for medial and lateral

Telescopic ROM knee bracing support post-operative hinged knee immobilizer

Telescoping ROM hinged Elbow brace with arm sling and wrist pads

Telescope ROAM knee supports with four protective straps

Telescope ROAM Elbow braces hang support

Adjustable 11" pneumatic ROM walker Boot braces

Children leg splint telescopic post-op knee brace

Limited ROM knee brace pulled-on knee stabilizer

Adjustable ROM hinged Elbow braces with Aluminum Alloy Metal Frame

Foot drop braces dorsal night splint with adjustable straps

Medical Dorsal night splints for Achilles Tendonitis Drop foot braces

Telescope hinged knee braces with aluminum ROM fracture support for orthopedic post-op immobilizantion

IPEX HEALTHCARE

...all for Health and Care...

Postal Address:
IPEX Healthcare Limited,
P. O. Box 42502, Dar Es Salaam, Tanzania.

Physical Address:
Plot No. 08, Bahati Street, Temeke Area,
Dar es Salaam, Tanzania
Tel: +255 712 897 082 / +255 745 226 582
Email: info@ipex.co.tz **Web:** www.ipex.co.tz