Therapy Equipment & Furniture

PRODUCT CATALOGUE

Scan to Download the Catalogue

IPEX HEALTHCARE

...all for Health and Care...

www.ipex.co.tz

IPEx HEALTHCARE

...all for Health and Care...

YOUR RELIABLE & TRUSTED PARTNER

In Physiotherapy, Rehabilitation & Occupational Health Solutions

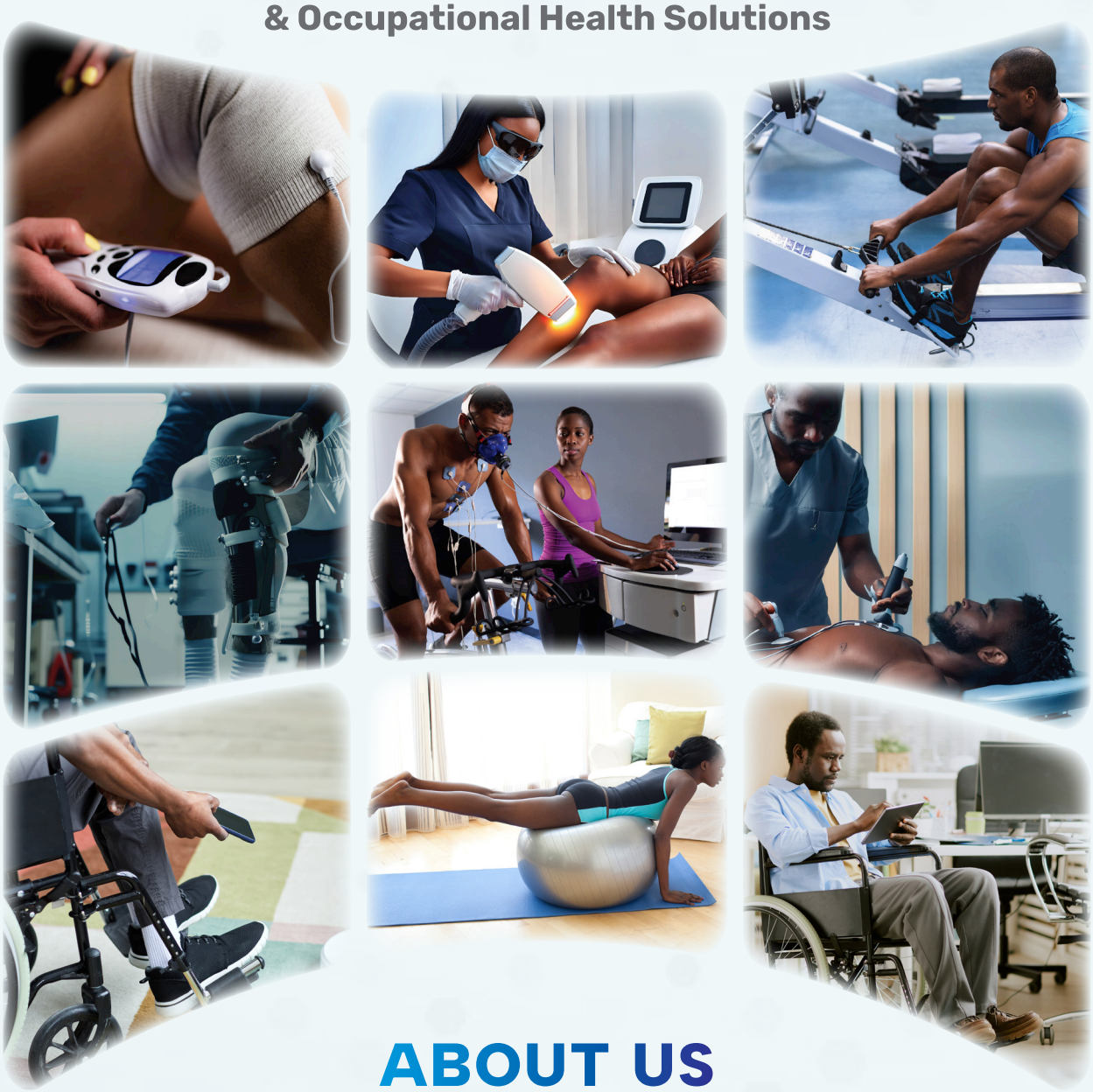

ABOUT US

IPEx Healthcare Limited is a Tanzanian based and Tanzanian registered company dealing with Importation, and Supply of Hospital consumables, Medical, Surgical and Laboratory equipment, supplies, devices and other related products and services in the medical and healthcare sector.

BED FERROX

SERIES CEZANNE PRO

Electric motor assisted kyphosis function

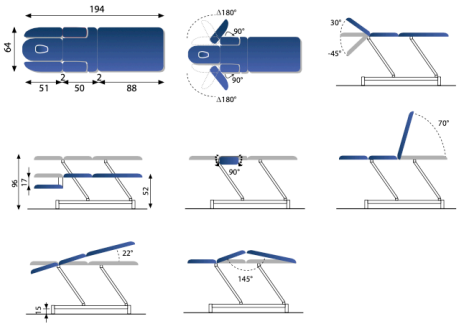

FEATURES

- Three sections, seven elements
- Central section with folding armrest
- Headrest with two armrest pivoting 180°
- Electric Kyphosis and Trendelenburg positions (visceral)
- Electric motors with a thrust force of 8000 N for elevation
- Electric motors with a thrust force of 4000 N for kyphosis position
- Comando a pulsantiera
- Safety control key
- Fire-retardant padding and covering class 1IM
- Electric height adjustment range 52 Δ 96 cm
- Safe working load 150 kg
- Dimensions: 194 x 64 x 52 Δ 96 cm
- Medical device

BED FERROX

SERIES CEZANNE PRO

Electric motor assisted kyphosis function

CEZANNE PRO 5

Art. 240015 Armrests pivoting by 100 degrees High-speed motor

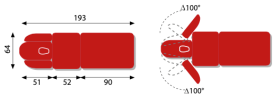

CEZANNE PRO 3

Art. 241015 High-speed motor

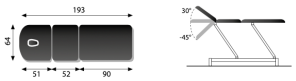

BED FERROX

SERIES CEZANNE JR

FEATURES

- Three sections, seven elements
- Central section with folding armrest
- Headrest with two armrest pivoting 180°
- Electric motor with a thrust force of 8000 N
- Manual control switch
- Safety control key
- Fire-retardant padding and covering class 1IM, washable
- Electric height adjustment range 50 Δ 92 cm
- Safe working load 160 kg
- Dimensions: 197 x 64 x 50 Δ 92 cm
- Medical device

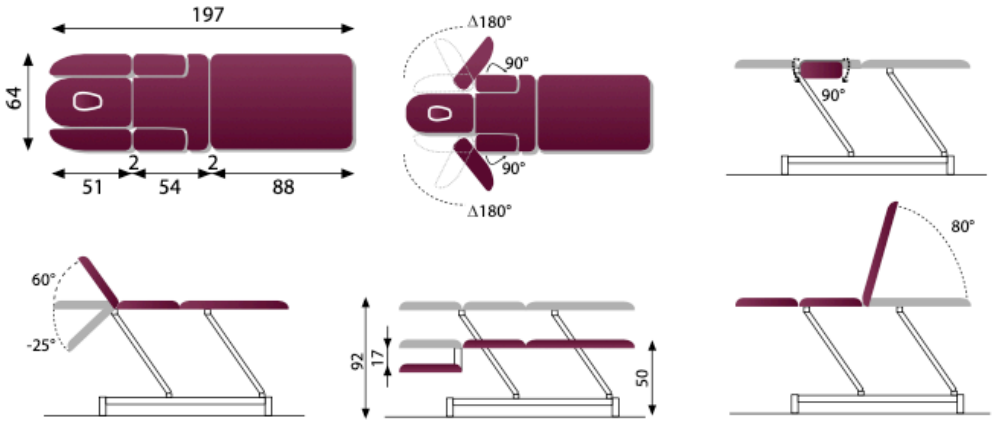

BED FERROX

SERIES CEZANNE JR

CEZANNE JR 5 Art. 240016

Armrests pivoting by 100 degrees
Version shown with optional footbar switch for peripheral control and castors

- Medical device

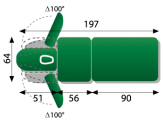

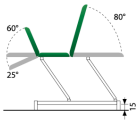

CEZANNE JR 3 Art. 241016

Version shown with optional footbar switch for peripheral control and castors

- Medical device

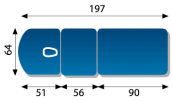

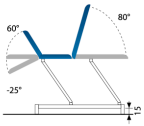

BED FERROX

SERIES MATISSE

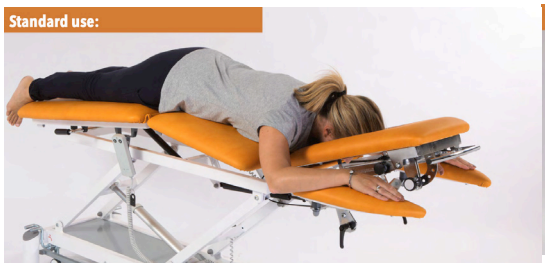

The “REVERSO” head support

Expand your treatment table with new features, so that the patient can SIT or LIE during treatment.

« REVERSO » :

- Tilts up on two sides
- Length is adjustable depending on the size of the patient
- Tilts down for a more comfortable sitting position

The pivoting supports are height adjustable or can be tilted.
The lift system regulates table height and is adjustable.
In standard use, the head support can be tilted up and down.
The mobility of the segments and the uncomplicated arrangement make the work more pleasant and effective.

BED FERROX

SERIES MATISSE Pro

MATISSE PRO 2+2

Art. 241011 – Five mobile sections.
Armrests pivoting by 180 degrees, folding armrest on main sectionMedical device

✪ FEATURES

- Six sector table
- Central section with colapsible armrest
- Headrest with two armrest pivoting 180˚
- Electric motor with a thrust force of 8000 N
- Manual control switch
- Safety control key
- Fire-retardant padding and covering class 1IM
- Electric height adjustment range 50 ▲ 92 cm
- Safe working load 160 kg
- Dimensions: 194 x 64 x 50 ▲ 92cm
- Medical device

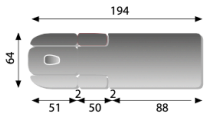

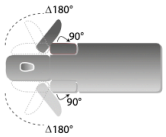

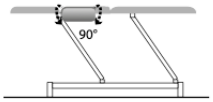

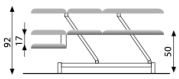

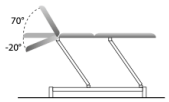

BED FERROX

SERIES MATISSE Pro

MATISSE PRO II

Art. 240011 - Armrests pivoting by 100 ˚degrees
High-speed motor
Treatment table with electrically adjustable height control. For therapy, massages and medical care

✪ FEATURES

- Two section table with gas spring assisted head section
- Electric motor with a thrust force of 8000 N
- Manual control switch
- Safety control key
- Fire-retardant padding and covering class 1IM Electric height adjustment range 50 ▲ 92 cm
- Safe working load 160 kg
- Dimensions: 194 x 64 x 50 A 92 cm
- Medical device

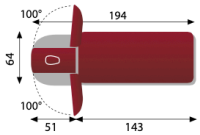

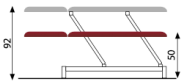

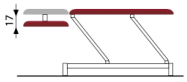

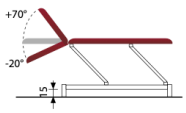

BED FERROX

DEGAS RPG

ART. 240025 RPG

Treatment table with electrically adjustable height control.

FEATURES

- Two section table with 180° pivoting arm supports, height adjustable +17 cm
- Electric motor with a thrust force of 8000 N
- Manual control switch
- Safety control key
- Fire-retardant padding and covering class 1IM
- Electric height adjustment range 50 ▲ 92 cm
- Safe working load 160 kg
- Dimensions: 200 x 65 x 50 ▲ 92 cm
- Medical device

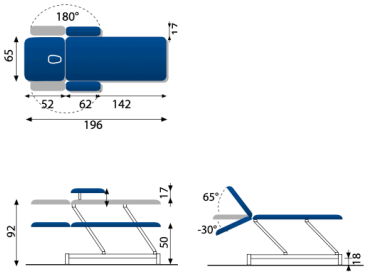

BED FERROX

DEGAS Pro

ART. 240020

Treatment table with electrically adjustable height control. For therapy, massages and medical care.

FEATURES

- Two section table with gas spring assisted head section
- Electric motor with a thrust force of 8000 N
- Manual control switch
- Safety control key
- Fire-retardant padding and covering class 1IM
- Electric height adjustment range 50 ▲ 92 cm
- Safe working load 160 kg
- Dimensions: 194 x 64 x 50 ▲ 92 cm
- Medical device

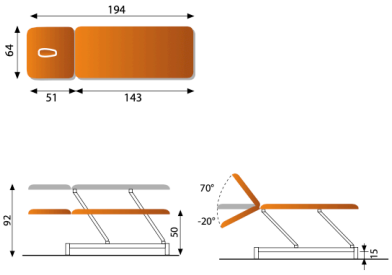

BED FERROX

OS 206

ART. 239000 – POSITIVE and negative-tilt head rest, fixed armrests

✪ FEATURES

- Two section table with gas spring assisted backrest (positive/negative tilt)
- Upholstery clamped or sawn (optional)
- High density HR 75 padding
- Fire-retardant padding and covering
- Electric motor with a thrust force of 8000 N
- Manual control switch
- Safety control key
- Electric height adjustment range 50 ▲ 92 cm
- Safe working load 160 kg
- Dimensions: 190 x 54 x 50 ▲ 92 cm
- Medical device

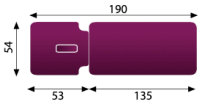

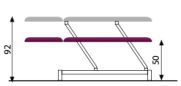

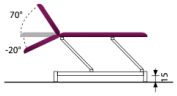

BED FERROX

UNIVERSAL UROLOGY

ART. 239100 – UNIVERSAL

Professional treatment table for kinesitherapy, with integrated option for fitting a stirrup system for uro-gynaecological examination

✪ FEATURES

- Electric motor with a thrust force of 8000 N
- Gas spring assisted regulation of the two backrests
- Pair of safety clip belts
- Manual control switch
- Safety control key
- Fire-retardant padding and covering, class 1IM, washable, density 40
- Electric height adjustment range 50 Δ 92 cm
- Safe working load 150 kgs
- Dimensions: 188 x 64 x 50 Δ 92 cm
- Medical device

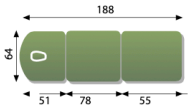

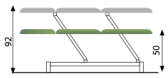

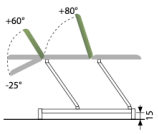

STOOL FERROX

STOOLS

Treatment table accessories,
footboards, stools and chairs

FIXED HEIGHT CHAIRS AND STOOLS

(1) Art. 111810 - ADJUSTABLE-HEIGHT BENCH STOOL WITH STEEL FRAME**

- adjustable height 35 A 65 h cm
- with padded top covered in washable imitation leather
- seat dimensions 60 x 30 cm

(2) Art. 111780-STOOL WITH EPOXY STEEL FRAME**

- with padded top covered in washable imitation leather
- dimensions 60 x 30 x 35 h cm

ADJUSTABLE HEIGHT, GAS SPRING OPERATED SWIVELLING STOOLS

(3) Art. 220190-SWIVELLING STOOL** overstitched padding

- fire-retardant padding and covering
- rubber covered swivelling castors
- adjustable height 45 A 55 h cm

(4) Art. 220194 - "TABOURET" SWIVELLING STOOL**

- fire-retardant padding and covering
- rubber covered swivelling castors
- adjustable height 62 A 85 h cm

FOOTBOARDS

(5) Art. 220181-ONE STEP

- dimensions 40 x 20 x 18 h cm
- chromed steel frame
- Medical device

(6) Art.220180-TWO STEPS

- dimensions 50 x 40 x 36 h cm
- chromed steel frame
- Medical device

BED FERROX

BOTTICELLI

Art. 238000 – Positive and negative tilt
Treatment table with electrically adjustable height control.
For therapy, massages and medical care

✪ FEATURES

- 2 section table with gas spring assisted backrest with positive/negative tilt facility
- Electric motor with a thrust force of 6000 N
- Manual control switch
- Fire-retardant padding and covering class 1IM
- Electric height adjustment range 50 ▲ 92 cm
- Safe working load 140 kg
- Dimensions: 204 x 64 x 50 ▲ 92 cm
- Medical device

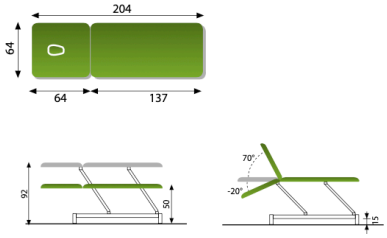

BED FERROX

BOTTICELLI PRO
WITH ARMRESTS

Art. 238001 – Positive/Negative Head Section Tilt with Armrests pivoting 100°
Treatment table with electrically adjustable height control and pivoting armrests. For therapy, massages and medical care

✪ FEATURES

- 4 section table with gas spring assisted backrest with positive/negative tilt facility
- Electric motor with a thrust force of 6000 N
- Fire-retardant padding and covering
- Electric height adjustment range50 ▲ 92 cm
- Safe working load 140 kg
- Dimensions: 194 x 64 x 50 ▲ 92 cm
- Medical device

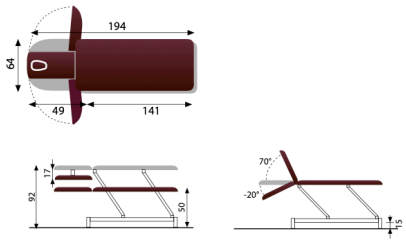

WEDG CUSHION FERROX

PILLOWS AND CUSHIONS

Treatment table accessories. Padded in and covered with imitation leather fire-retardant material.

✪ VARIOUS SIZES AVAILABLE:

(1) WEDGE-SHAPE WITH BREATHING HOLE **
Art. 240067 40 x 18 x 9 cm

(2)-(3) SEMI-CYLINDRICAL **
Art. 240280 30 x 15 x 8 cm
Art. 240286 50 x 25 x 18 cm

(4) TRAPEZOIDAL **
Art. 240290 40 x 50 x 30 cm

(5) ANATOMICAL **
Art. 240065 50 x 27 x 6 A9 h cm for neck
Art. 240066 75 x 50 x 6 A 19 h cm for legs

(6)-(7)-(8)-(9) CYLINDRICAL **
Art. 240080 Ø 8 x 20 cm
Art. 240090 Ø 15 x 35 cm
Art. 240100 Ø 15 x 50 cm
Art. 240110 Ø 20 x 100 cm
Art. 240120 Ø 25 x 50 cm
Art. 240130 Ø 25 x 100 cm

(10)-(11) WEDGE-SHAPE **
Art. 240180 30 x 30 x 10 cm
Art. 240190 40 x 30 x 10 cm
Art. 240195 40 x 50 x 15 cm
Art. 240200 60 x 40 x 15 cm
Art. 240210 60 x 60 x 15 cm
Art. 240220 60 x 60 x 20 cm
Art. 240230 60 x 40 x 30 cm

(12) RECTANGULAR **
Art. 240240 40 x 20 x 10 cm
Art. 240250 40 x 20 x 15 cm
Art. 240260 40 x 30 x 10 cm
Art. 240270 60 x 25 x 10 cm

(13) CUBIC **
Art. 240140 30 x 30 x 30 cm
Art. 240150 40 x 40 x 40 cm
Art. 240160 50 x 50 x 50 cm
(14) Art. 240296 for breast support**
(15) Art. 240295 sculptured leg suppor cushion **
(16) Art. 00151 THE ORIGINAL
** special upholstery cleaning set.

BED FERROX

SERIES PICASSO

PICASSO XLTREND – Art.240018
Long Backrest XL 84 cm – positive tilt only.
Treatment table with electrically adjustable height control and pivoting armrests. For therapy, massages and medical care

✪ FEATURES

- 2 section table with gas spring operated backrest
- Electric motor with a thrust force of 8000 N
- Manual control switch
- Safety control key
- Fire-retardant padding and covering class 1IM
- Electric height adjustment range 50 ▲ 92 cm
- Safe working load 160 kg
- Dimensions: 198 x 64 x 50 ▲ 92 cm
- Medical device

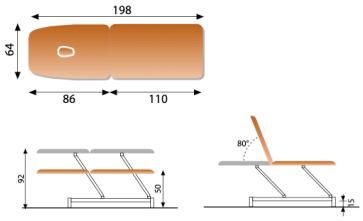

BED FERROX

SERIES PICASSO

PICASSO XLL TREND – Art. 240018 L
Width 80 cm – positive tilt only.
Treatment table with electrically adjustable height control. For therapy, massages and medical care

✪ FEATURES

- 2 section table with gas spring operated backrest
- Electric motor with a thrust force of 8000 N
- Manual control switch
- Safety control key
- Fire-retardant padding and covering class 1IM
- Electric height adjustment range 50 ▲ 92 cm
- Safe working load 160 kg
- Dimensions: 198 x 80 x 50 ▲ 92 cm
- Medical device

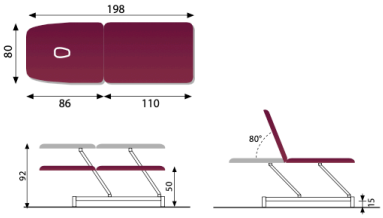

BED FERROX

SERIES PICASSO

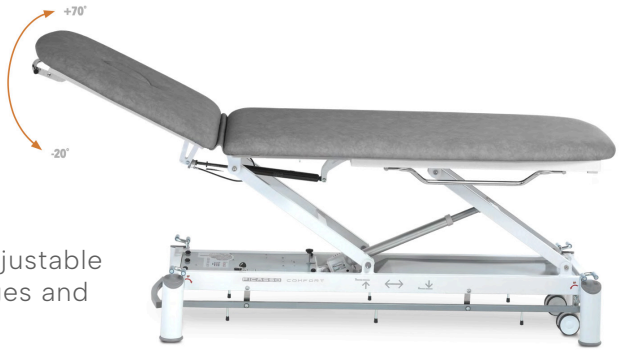

PICASSO COMFORT
ART. 238500 – POSITIVE AND NEGATIVE TILT

Treatment table with electrically adjustable height control. For therapy, massages and medical care

FEATURES

- 2 section table with gas spring assisted large backrest with positive/negative tilt facility
- Electric motor with a thrust force of 8000 N
- Manual control switch
- Towel hanger
- Fire-retardant padding and covering class 1IM
- Electric height adjustment range 50 Δ 92 cm
- Safe working load 160 kg
- Dimensions: 209 x 64 x 50 ▲ 92 cm
- Medical device

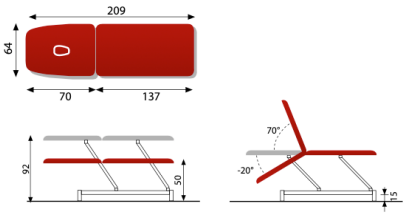

BED FERROX

SERIES PICASSO

PICASSO CLUB
Art. 240009 – Positive and negative tilt

Treatment table with electrically adjustable height control. For therapy, massages and medical care

FEATURES

- 2 section table with gas spring assisted backrest with positive/negative tilt facility
- Electric motor with a thrust force of 8000 N
- Manual control switch
- Fire-retardant padding and covering class 1IM
- Electric height adjustment range50 ▲ 92 cm
- Safe working load 160 kg
- Dimensions: 209 x 64 x 50 ▲ 92 cm
- Medical device

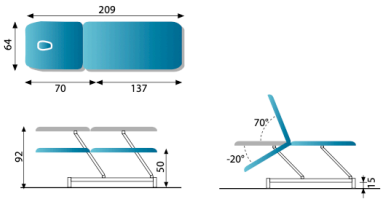

BED FERROX

SERIES PICASSO

PICASSO QUATTRO
ART. 240022 – 4 SECTIONS

Treatment table with electrically adjustable height control.
For therapy, massages and medical care

✪ FEATURES

- 4 section table
- Gas spring assisted backrest and split leg sections
- Electric motor with a thrust force of 8000 N
- Manual control switch
- Safety control key
- Fire-retardant padding and covering class 1IM
- Electric height adjustment range 50 ▲ 92 cm
- Safe working load 140 kg
- Dimensions: 198 x 64 x 50 ▲ 92 cm
- Medical device

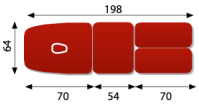

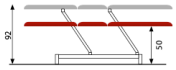

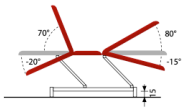

BED FERROX

SERIES PICASSO

PICASSO SUITE – POSITIVE TILT ONLY ART. 240018S

Treatment table with electrically adjustable height control.
For therapy, massages and medical care

✪ FEATURES

- 3 section table
- Gas spring assisted backrest
- Electric motor with a thrust force of 8000 N
- Manual control switch
- Safety control key
- Fire-retardant padding and covering class 1IM
- Electric height adjustment range 50 ▲ 92 cm
- Safe working load 160 kg
- Dimensions: 205 x 62 x 50 ▲ 92 cm
- Medical device

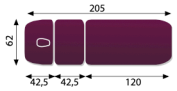

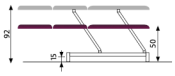

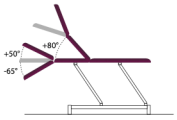

BED FERROX

SERIES CHAGALL

CHAGALL 6 NEO – Art. 240002 – 6 Sections

Quick height adjustment within 34 seconds. electrically adjustable backrest function

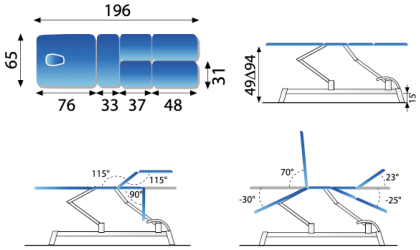

✪ FEATURES

- 5 joint, 6 section table
- 2 electric motors with a thrust force of 10000 N and 6000 N (backrest)
- Manual control switch
- Safety control key
- Gas spring assisted regulation of split leg sections
- Trendelenburg and kyphosis positions
- Fire-retardant padding and covering class 1IM
- Electric height adjustment range 49 ▲ 94 cm
- Safe working load 250 kg
- Dimensions: 196 x 65 x 49 ▲ 94 cm
- Medical device

BED FERROX

SERIES CHAGALL

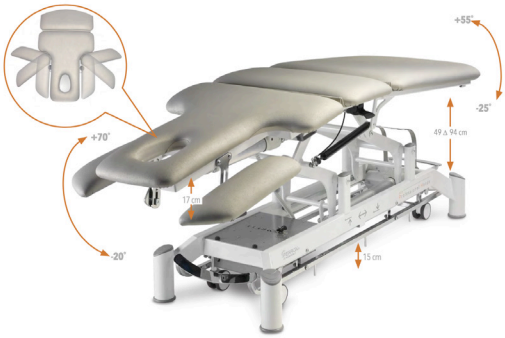

CHAGALL 5 NEO

Art. 240001 – 5 sections Quick height adjustment within 34 seconds. Electrically adjustable backrest function Armrests pivoting by 100 degrees

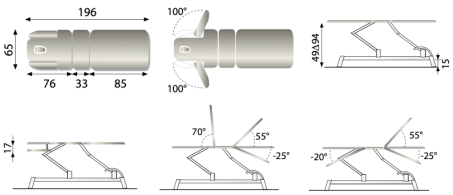

✪ FEATURES

- 4 joint, 5 section table
- 2 electric motors with a thrust force of 10000 N and 6000 N (backrest)
- Manual control switch
- Safety control key
- Gas spring assisted regulation of leg section
- Trendelenburg and kyphosis positions
- Electric height adjustment range 49 ▲ 94 cm
- Fire-retardant padding and covering class 1IM, washable Safe working load 250 kg
- ·Dimensions: 196 x 65 x 49 ▲ 94 cm
- Medical device

BED FERROX

SERIES CHAGALL

CHAGALL 3 NEO – Art. 240000 – 3 Sections Quick Height Adjustment Within 34 Seconds. Electrically Adjustable Backrest

✪ FEATURES

- 2 joint, 3 section table
- 2 electric motors with a thrust force of 10000 N and 6000 N (backrest)
- Manual control switch
- Safety control key
- Gas spring assisted leg section
- Trendelenburg and kyphosis position
- ·Electric height adjustment range 49 ▲ 94 cm
- Fire-retardant padding and covering class 1IM, washable
- Safe working load 250 kg
- Dimensions: 196 x 65 x 49 ▲ 94 cm
- Medical device

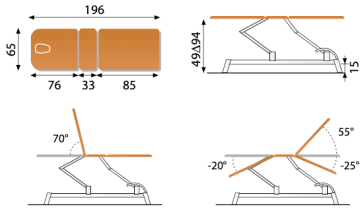

BED FERROX

SERIES CHAGALL

CHAGALL 2 NEO – Art. 243001 – 2sections Quick height adjustment within 34 seconds. Electrically adjustable backrest. Bariatric use.

✪ FEATURES

- Two sections table
- 2 electric motors with a thrust force of 10000 N and 6000 N (backrest)
- Manual control switch
- Safety control key
- Electric height adjustment range 49 ▲ 94 cm
- Fire-retardant padding and covering class 1IM, washable
- Safe working load 250 kg
- Dimensions: 200 x 70 x 49 ▲ 94 cm
- Medical device

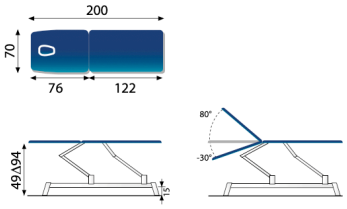

BED FERROX

BOBATH PRO POWER 200X120

(1) BOBATH "PRO POWER" – Art. 240041/TE electrically assisted backrest

- Electric motor with a thrust force of 10000 N
- Tubular protection for upholstery
- Hand switch control
- Class IM1 fire retardant padding and covering
- Electric height adjustment range 46 ▲ 94 cm
- Gas spring assisted tilting of backrest up to + 85°
- Safe working load: 300 kg
- Dimensions: 200 x 120 x 46 ▲ 94 cm
- Medical device

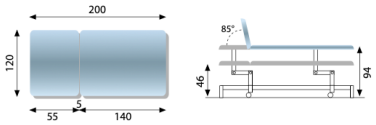

(2) BOBATH "PRO POWER" – art.240041 D

- Electric motor with a thrust force of 10000 N
- Tubular protection for upholstery
- Foot pedal control
- Safety control key
- Class IM1 fire retardant padding and covering
- Electric height adjustment range 46 ▲ 94 cm
- Safe working load: 300 kg
- Dimensions: 200 x 120 x 46 ▲ 94 cm
- Medical device

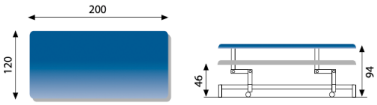

BED FERROX

BOBATH 200X200

(1) BOBATH "GRAN COMFORT"

- Electric motor with a thrust force of 10000 N
- Tubular protection for upholstery
- Two sets foot pedal control
- Safety control key
- Class IM1 fire retardant padding and covering
- Transport wheels
- Electric height adjustment range 46 ▲ 94 cm
- Safe working load: 300 kg
- Dimensions: 200 x 200 x 46 ▲ 94 cm
- Medical device

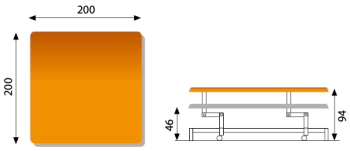

BED FERROX

BOBATH JR 200X120

(1) BOBATH JR – ART. 240006 As described for Art. 240006 but with electrically assisted backrest

- Hand switch control
- Medical device

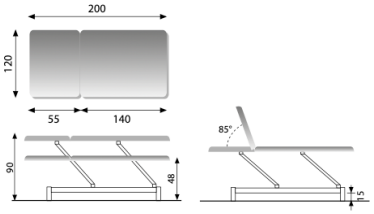

(2) BOBATH Jr – Art. 240006

- Electric motor with a thrust force of 8000 N
- Foot pedal control
- Safety control key
- Fire-retardant padding and covering class 1IM
- Electric height adjustment range 48 ▲ 90 cm
- Safe working load 160 kg
- Dimensions: 200 x 120 x 48 ▲ 90 cm
- Medical device

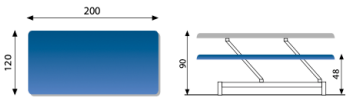

BED FERROX

BOBATH JR 200X100

(1) BOBATH JR – ART. 240007

- Electric motor with a thrust force of 8000 N
- Manual control switch
- Safety control key
- Fire-retardant padding and covering class 1IM
- Electric height adjustment range 48 ▲ 90 cm
- Safe working load 160 kg
- Dimensions: 200 x 100 x 48 ▲ 90 cm
- Medical device

(2) BOBATH JR – ART. 240007 TE –

As described for Art. 240007 but with electrically assisted backrest

- Hand switch control
- Medical device

BED FERROX

TIEPOLO 100X200

TIEPOLO 100X200 – ART. 240033

Fixed height Bobath table with steel frame for medical examination, therapy and massages

- Bobath therapy treatment table
- Fire-retardant padding and covering class 1IM, washable
- Safe working load 200 kg
- dimensions 200 x 100 x 50 h cm
- Medical device

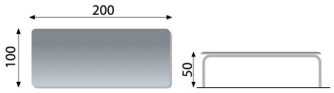

TILTING BED FERROX

MICHELANGELO

ART. 250177 – VARIABLE HEIGHT, 5 FLOOR CONTACT POINTS FOR EXTRA STABILITY.

Very comfortable double density 72cm upholstery.
Tilt Table with two electric motors for height and tilt adjustment

- Height adjustment range 50 ▵ 95 cm for easy transfer of wheelchair patients
- Gas spring assisted backrest.
- Easy patient hoist transfer.
- 2 electric motors with a thrust force 10000 N for height and 10000 N for tilt adjustment
- +80 degree gas strut adjustable backrest.
- Manual hand switch with safety lock function
- Electric height adjustment range 50 ▵ 95 cm
- Fitted with 5 fixation belts made by Socopedic™ in Cordura™
- Equin/Talus footrests -+15 degrees adjustable incline
- Tilt adjustment up to + 88°
- 40 density filler foam
- Class IM1 fire resistant foam and upholstery
- Inclinometer
- Two fixed and two swivelling castors with brake
- Vertical and horizontal safety work load 160 kg
- Dimensions: 200 x 74 x 50 ▵ 95 h cm
- Medical device

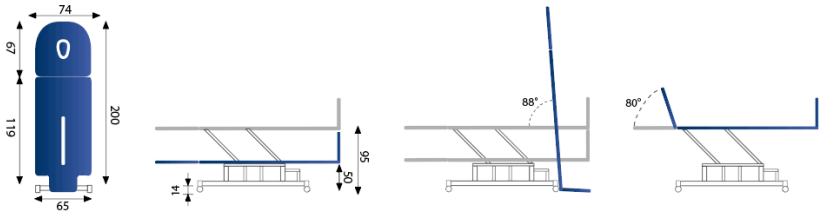

BED FERROX

DALÌ – GOYA WITH BACKREST

(1) DALÍ – Art. 220151 P

Fixed height treatment table with steel frame. For medical examination, therapy and massages.

- 2 section table with gas spring assisted regulation of backrest. Positive tilt only.
- Fire-retardant padding and covering class 1IM
- Dimensions: 195 x 65 x 80 cm
- Medical device

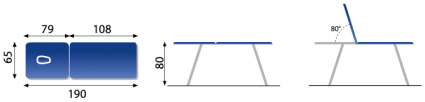

(2) GOYA – ART. 220155

Fixed height treatment table with steel frame. For medical examination, therapy and massages

- 1 joint, 2 section table with gas spring assisted backrest
- Fire-retardant padding and covering class 1IM
- Gas spring assisted regulation of backrest section
- positive / negative tilt facility
- Dimensions: 203 x 65 x 80 cm
- Medical device

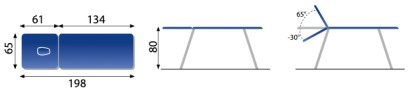

BED FERROX

TIEPOLO 200X200

TIEPOLO 200X200 – ART. 240032

Fixed height Bobath table with steel frame for medical examination, therapy and massages

- Bobath therapy treatment table
- Fire-retardant padding and covering class 1IM, washable
- Safe working load 200 kg
- dimensions 200 x 200 x 50 h cm
- Medical device

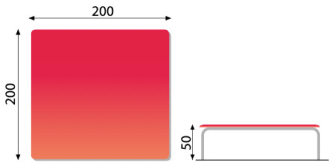

TILTING BED FERROX

RAFFAELLO

ART. 250174 D – VARIABLE HEIGHT ADJUSTMENT

Tilt Table with two electric motors for height and tilt adjustment

- Height adjustment range 49 Δ 94 cm for easy transfer of wheelchair patients
- Gas spring assisted regulation of backrest
- The design of the support frame allows smooth lifting and transfer of the patient
- 2 electric motors with a thrust force 10000 N for height and 10000 N for tilt adjustment
- Manual hand switch with safety lock function
- Electric height adjustment range 49 ▲ 94 cm
- Independently adjustable and folding twin footboard. Positive/ negative tilt + - 15˚
- Tilt adjustment up to + 88˚
- Fire-retardant padding and covering class 1IM
- Gas spring assisted backrest tilt adjustment + 80˚
- Equipped with set of 5 fixation belts
- Two fixed and two swivelling castors with brake
- Goniometer
- Vertical and horizontal safety work load 160 kg
- Dimensions: 200 x 70 x 49 ▲ 94 h cm
- Medical device

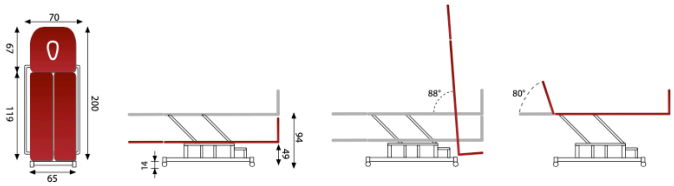

TILTING BED FERROX

CANOVA

Art. 250171 D – Single leg section Tilt table with electric tilt adjustment

- Electric motor with a thrust force of 6000 N for positive tilt option
- Positive tilt up to + 88˚
- Manual hand switch with safety lock function
- Equipped with set of 3 fixation belts
- Manual control switch
- Fire-retardant padding and covering class 1IM
- Folding and adjustable footboard + - 15˚
- Two fixed and two swivelling castors all with blocking mechanism
- Patient transfer access 14 cm
- Safety work load 120 kg
- Dimensions: 200 x 65 x 49h cm
- Medical device

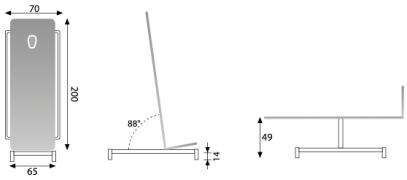

TILTING BED FERROX

CANALETTO

Art. 250172 Independently adjustable twin footboard

- Electric motor with a thrust force of 8000 N
- Positive tilt up to + 88°
- Manual hand switch with safety lock function
- Independently adjustable and folding twin footboard. Positive/negative tilt + - 15°
- Equipped with set of 5 fixation belts
- Fire-retardant padding and covering class 1IM
- Two fixed and two swivelling castors with brakes
- Safety work load 140 kg
- Dimensions: 200 x 74 x 49h cm
- Medical device

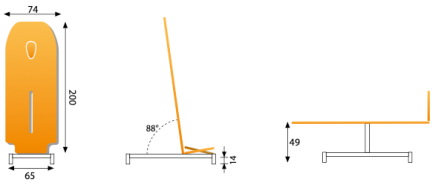

BED FERROX

MODÍ – WITH HEADREST

MODÍ – Art. 220151

Fixed height treatment table with steel frame. For medical examination, therapy and massages

- 1 joint, 2 section table with gas spring assisted headrest
- Fire-retardant padding and covering class 1IM
- Gas spring assisted regulation of head section positive / negative tilt facility
- Dimensions: 195 x 65 x 80 cm
- Medical device

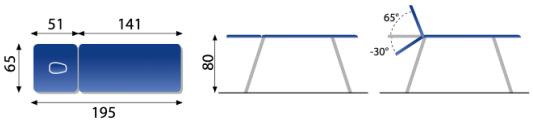

BED FERROX

MARTINI– MARTINI plus

MARTINI – Art. 220156

Fixed height treatment table with steel frame. For medical examination, therapy and massages.

(1) MARTINI – Art.220156

- 1-joint, 2-section table
- Manual rack-and-pinion adjustment of head section
- Foam in bidensity: T35/PK40
- Safe working load: 140 kg
- Dimensions: 202 x 67 x 68 h cm
- Medical device

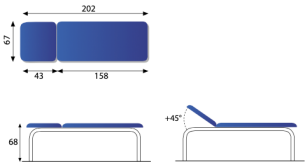

MARTINI PLUS – ART. 220158

Fixed height treatment table with steel frame. For medical examination, therapy and massages

MARTINI Plus – Art.220158

- 1-joint, 2-section table
- Manual rack-and-pinion adjustment of head section
- Foam in bidensity: T35/PK40
- Safe working load :140 kg
- Dimensions 202 x 82 x 68 h cm
- Medical device

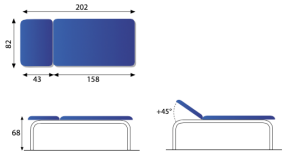

BED FERROX

SERIES MATISSE

MATISSE "REVERSO"

Art. 242011 – 100°pivoting arm supports
Quick height adjustment within 43 seconds

Table with electric height adjustment for therapy, massage, and medical treatment

- 2-section treatment table with four segments
- Headrest adjustment assisted by gas springs
- Electric lift system with a force of 8000N
- Manual control
- Safety key
- Flame retardant coating and foam M1
- Height adjustable from 50 ▲ 92 cm
- Safe working load: 160 kg
- Dimensions: 204 x 64 x 50 ▲ 92 cm
- Medical device

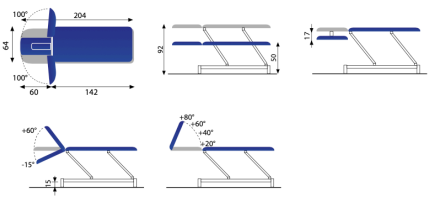

BED FERROX

BERNINI – TIZIANO

BERNINI – Art. 220300
Fixed height treatment table with natural beech frame for medical
examination, therapy and massages.

(1) BERNINI – Art. 220300 cm 195 x 65 x 78 h
- 1 joint, 2 section
- Manual rack-and-pinion adjustment of head section

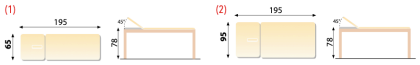

OPTIONS:
- Art. 220168 F - breathing hole and plug
- Art. 220170 A - paper roll holder
- Art. 220340 - wooden shelf **

- Medical device

(2) BERNINI – Art. 220305 A cm 195 x 95 x 78 h
OPTIONS:
- Art. 220168 F - breathing hole and plug
- Art. 220171 A - paper roll holder
- Art. 220341 - wooden shelf **

- Medical device

TIZIANO – Art. 220301F
Fixed height treatment table with natural beech frame for medical
examination, therapy and massages.

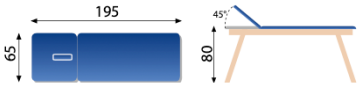

(3) TIZIANO – Art. 220301F cm 195 x 65 x 80 h
- 1 joint, 2 section
- Manual rack-and-pinion adjustment of head section
- Medical device

OPTIONS:
- Art. 220168 F - breathing hole and plug
- Art. 220170 A - paper roll holder

FURNITURE FISIOTECH

GLASS DOOR CABINETS
Tempered glass door cabinets with four adjustable shelves and hinged doors, painted steel structure.

TECHNICAL SPECIFICATIONS	
Length	80 / 60 cm
Width	40 cm
Height	180 / 160 cm

MODELS	DIMENSIONS	CODE
Two hinged doors	80 x 40 x 180 cm	1611011
One hinged door	60 x 40 x 160 cm	1611012

DESK – Code 1611101
Desk with three drawers, painted steel structure and plywood board.

Code 1611101

TECHNICAL SPECIFICATIONS	
Length	130 cm
Width	80 cm
Height	73 cm

REVOLVING CHAIR – Code 1611201
Revolving chair with functional aesthetical features, with a high backrest in constant contact with your back.

Code 1611201

TECHNICAL SPECIFICATIONS	
Depth	63 cm
Width	54 cm
Height	109 cm
Seat depth	44 cm
Seat width	46 cm
Seat height	55 cm

UPHOLSTERED CHAIR – Code 1611202
Chair with non-deformable padding, painted steel structure.

Code 1611202

TECHNICAL SPECIFICATIONS	
Depth	66 cm
Width	71 cm
Height	75 cm
Seat depth	49 cm
Seat width	50 cm
Seat height	42 cm

NEW BED FISIOTECH

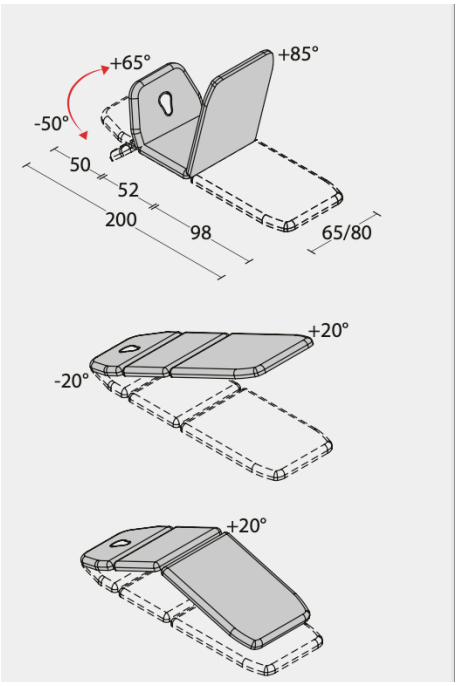

TECHNICAL SPECIFICATIONS	
Height adjustment	electrical or hydraulic 47-92 cm
Length	200 cm
Width	65 / 80 cm
Max. working load	200 kg
Headrest adjustment	with gas spring +65° -50°
Middle section adjustment	with gas spring or electrically +20°
Footrest adjustment	with gas spring +85°
Trendelenburg position	+20°
Breathing hole and bung	as standard
Padding and upholstery fire-resistance rating	1IM
Padding: density/thickness	30 (kg/m³) / 4 cm
Lateral offset	24 cm
Under bed clearance (model with all round bar excluded)	12 cm
Weight	80 kg

ACCESSORIES	CODE
Paper roll holder	1210010
Four castors	1218020
Safety magnet	1221030
Safety double click	1221040

ACCESSORIES	CODE
Swiss plug	1221050
UK 3-pin plug	1221060
Double-ply paper roll	1210060

FURNITURE FISIOTECH

REVOLVING COAT RACK – Code 1611301
Standing, revolving coat rack with umbrella stand and drip tray.

Code 1611301

SCREEN – Code 1611401
Screen made of anodized aluminium tube frame.
Washable, self-extinguishing plastic curtains.
Ø 5 cm castors (central ones with brake).

Code 1611401

TECHNICAL SPECIFICATIONS	
Total width	16
Height	17
Section width	55

TERAPEUTA SCM-7-MED INMED

FEATURES

- 7-section for massage table.
- Adjustable head section from -70° to +40° with a gas spring.
- Face hole in the head section with 2 removable face hole covers (round, crescent).
- Fold-down side sections in the middle section with a semi-automatic blocking/ release system.
- Innovative self-locking fold-down armrests in head section (one hand operated) -
- SmartS4Arms (Smart Slide For Arms).
- Adjustable leg section from -10° to 80° with 2 gas springs.
- Release handle of the gas spring system in the leg section accessible from both sides of the table.
- Two-layer padding with upholstery in many colours.
- Powder coated, very stable steel frame.
- Traction support sleeves.
- Personal Authorization Safety System with 2 magnetic safety keys.
- HalloTronic® System for electric high/low height adjustment from 47 to 95 cm with a lifting capacity up to 225 kg.
- Powder coated steel high/low height adjustment foot bar accessible from each side of the table.
- Rubber feet with 1 cm height adjustment allowing for the levelling of the table.
- Two ways of frame painting: „white" or „twintone".

2 ways of frame painting

Box dimensions: **220 x 85 x 75 cm** Weight: **+50 kg**

Length: **205 cm** | Height: **47-95 cm** | Width: **69 cm** | Weight: **95/110 kg** | Max load*: **225 kg**

BED FISIOTECH

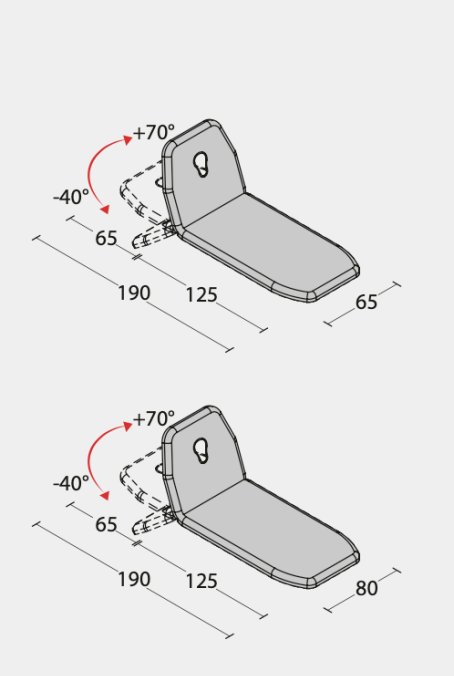

TECHNICAL SPECIFICATIONS	
Height adjustment	electrical or hydraulic 49-95 cm
Length	190 cm
Width	65 / 80 cm
Max. working load	200 kg
Headrest adjustment	with gas spring +70° -40°
Breathing hole and bung	as standard
Padding and upholstery fire-resistance rating	1IM
Padding: density/thickness	30 (kg/m³) / 4 cm
Lateral offset	none
Under bed clearance	12 cm
Weight	70 kg

ACCESSORIES	CODE
Paper roll holder	1218010
Four castors	1218020
Terry towel couch cover 65 cm	1210040
Terry towel couch cover 80 cm	1210050
Double-ply paper roll	1210060

ACCESSORIES	CODE
Safety magnet	1218030
Safety double click	1218040
Swiss plug	1218050
UK 3-pin plug	1218051

FURNITURE FISIOTECH

REVOLVING STOOL
Stool with five spokes. The height is adjustable with a gas spring. The seat is upholstered in a fire-resistant leatherette. See colours and materials in the chart on the back cover flap.

TECHNICAL SPECIFICATIONS	
Height adjustment	40-55 cm
Base diameter	60 cm
Seat diameter	35 cm
Max load	120 kg

MODELS	CODE
Black frame with castors	1612011
Black frame with feet	1612012
Chrome-plated frame with castors	1612013
Chrome-plated frame with feet	1612014

UPHOLSTERED BENCH
Powder-coated steel structure, padded seat upholstered in class 1IM fire-resistant, washable leatherette. Maximum load 150 Kg.

MODELS	DIMENSIONS	CODE
Small	60 x 30 x 45 cm	1613011
Big	120 x 30 x 45 cm	1613012

NEW BED FISIOTECH

Model shown Code 1121C30C1SB1 + Accessories Code1218020

All around foot bar switch

Model shown Code 1121C30C1CB1
+ Accessories Code 1218020

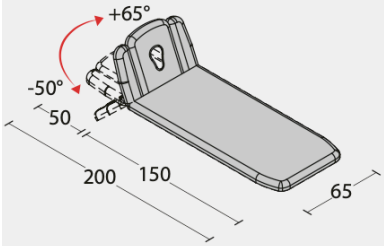

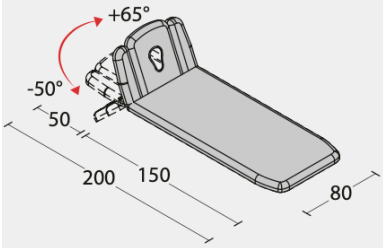

TECHNICAL SPECIFICATIONS	
Height adjustment	electrical or hydraulic 47-92 cm
Length	200 cm
Width	65 / 80 cm
Max. working load	200 kg
Headrest adjustment	with gas spring +65° -50°
Armrests on headrest adjustment	manual
Breathing hole and bung	as standard
Padding and upholstery fire-resistance rating	1IM
Padding: density/thickness	30 (kg/m³) / 4 cm
Lateral offset	24 cm
Under bed clearance (model with all round bar excluded)	12 cm
Weight	75 kg

ACCESSORIES	CODE
Paper roll holder	1210010
Four castors	1218020
Collapsible cotsides	1221070
Safety magnet	1221030

ACCESSORIES	CODE
Safety double click	1221040
Swiss plug	1221050
UK 3-pin plug	1221060
Double-ply paper roll	1210060

BED FISIOTECH

Model shown Code 1118B20C1SB2 + Accessories Code 1218020

Aluminium all around foot bar switch

Comfort padding

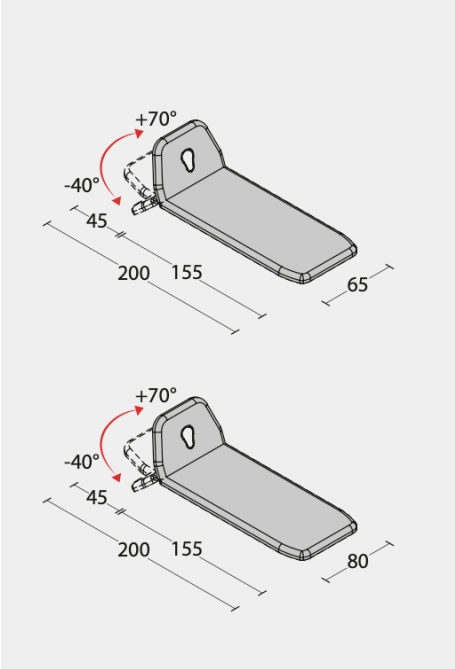

TECHNICAL SPECIFICATIONS	
Height adjustment	electrical or hydraulic 49-95 cm
Length	200 cm
Width	65 / 80 cm
Max. working load	200 kg
Headrest adjustment	with gas spring +70°- -40°
Breathing hole and bung	as standard
Padding and upholstery fire-resistance rating	1IM
Padding: density/thickness	30 (kg/m³) / 4 cm
Lateral offset	none
Under bed clearance	12 cm
Weight	70 kg

ACCESSORIES	CODE
Paper roll holder	1218010
Four castors	1218020
Terry towel couch cover 65 cm	1210040
Terry towel couch cover 80 cm	1210050
Double-ply paper roll	1210060

ACCESSORIES	CODE
Safety magnet	1218030
Safety double click	1218040
Swiss plug	1218050
UK 3-pin plug	1218051

FURNITURE FISIOTECH

WOODEN STOOL
Clear varnished hardwood beech stool. Maximum load 120 Kg.

MODELS	DIMENSIONS	CODE
Small	18 x 37 x 15 cm	1612201
Big	30 x 50 x 45 cm	1612202

WOODEN CHAIR
Clear-varnished beech wood chairs with or without armrests. Maximum load 110 Kg.

MODELS	DIMENSIONS	CODE
Without armrests	51 x 53 x 82 cm	1611203
With armrests	56 x 59 x 82 cm	1611204

MOVING MEDICAL TROLLEY
Multi-purpose medical trolley. It can be fully disassembled. RAL 9001 powder-coated steel tube, RAL 7035 powder-coated steel shelves, complete with Ø 5 cm swivel castors.

TECHNICAL SPECIFICATIONS	
Width	50 / 65 cm
Depth	34 / 45 cm
Height	82 cm

MODELS	DIMENSIONS	CODE
Small, two shelves	50 x 34 x 82 cm	1614010
Small, three shelves	50 x 34 x 82 cm	1614020
Big, two shelves	65 x 45 x 82 cm	1614030
Big, three shelves	65 x 45 x 82 cm	1614040

NEW BED FISIOTECH

Model shown Code 1121D30C1SB1 + Accessories Code1218020

Trendelenburg position

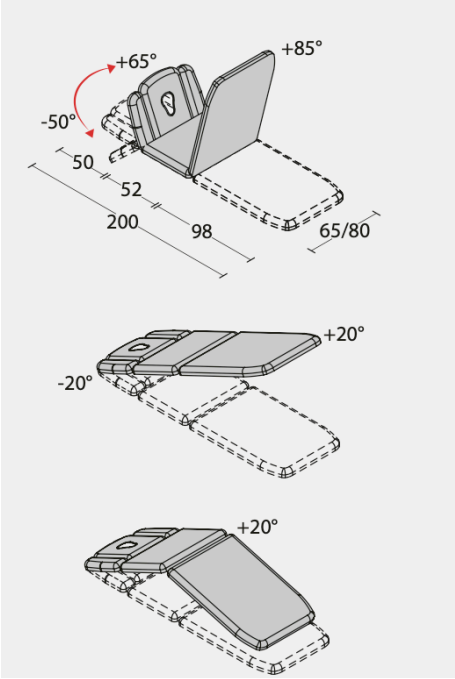

TECHNICAL SPECIFICATIONS	
Height adjustment	electrical or hydraulic 47-92 cm
Length	200 cm
Width	65 / 80 cm
Max. working load	200 kg
Headrest adjustment	with gas spring +65° -50°
Armrests on headrest adjustment	manual
Middle section adjustment	with gas spring or electrically +20°
Footrest adjustment	with gas spring +85°
Trendelenburg position	+20°
Breathing hole and bung	as standard
Padding and upholstery fire-resistance rating	11M
Padding: density/thickness	30 (kg/m³) / 4 cm
Lateral offset	24 cm
Under bed clearance (model with all round bar excluded)	12 cm
Weight	85 kg

ACCESSORIES	CODE
Paper roll holder	1210010
Four castors	1218020
Safety magnet	1221030
Safety double click	1221040

ACCESSORIES	CODE
Swiss plug	1221050
UK 3-pin plug	1221060
Double-ply paper roll	1210060

BED FISIOTECH

Model shown Code 1118C20C1SV1 + Accessories Code 1218020

Hydraulic control

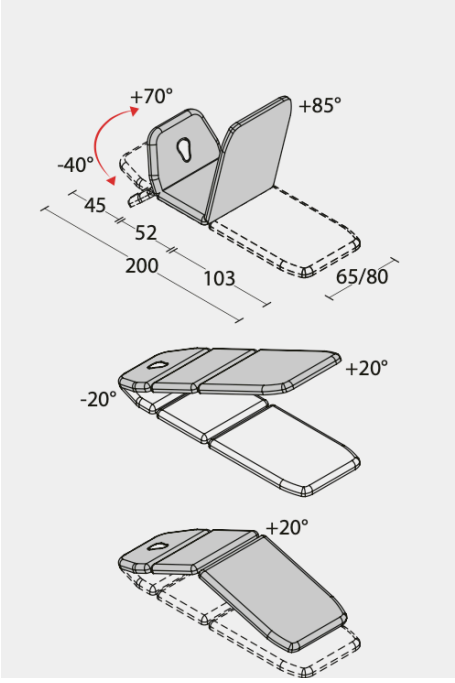

TECHNICAL SPECIFICATIONS	
Height adjustment	electrical or hydraulic 49-95 cm
Length	200 cm
Width	65 / 80 cm
Max. working load	200 kg
Headrest adjustment	with gas spring +70° -40°
Middle section adjustment	with gas spring or electrically +20°
Footrest adjustment	with gas spring +85°
Trendelenburg position	+20°
Breathing hole and bung	as standard
Padding and upholstery fire-resistance rating	1IM
Padding: density/thickness	30 (kg/m³) / 4 cm
Lateral offset	none
Under bed clearance	12 cm
Weight	70 kg

ACCESSORIES	CODE
Paper roll holder	1218010
Four castors	1218020
Terry towel couch cover 65 cm	1210040
Terry towel couch cover 80 cm	1210050
Double-ply paper roll	1210060

ACCESSORIES	CODE
Safety magnet	1218030
Safety double click	1218040
Swiss plug	1218050
UK 3-pin plug	1218051

FURNITURE FISIOTECH

MULTI-PURPOSE TROLLEY
Multi-purpose trolley with welded 18/10 (AISI 304) stainless steel 25-mm tube structure.

With two stainless steel pushing handles.
Complete with four swivel castors Ø125 mm and bumpers.

TECHNICAL SPECIFICATIONS	
Width	82 cm
Depth	52 cm
Height	82 cm

MODELS	CODE
With two shelves	1614101
With two horizontal drawers	1614111

Code 1614101

Code 1614111

COUCH STAIRS
Couch stairs with chrome-plated structure and nonslip steps.

TECHNICAL SPECIFICATIONS	
Step depth	20 cm
Step width	38 cm
First step height	22 cm
Second step height	44 cm
Maximum load	150 kg

MODELS	DIMENSIONS	CODE
Single step	39 x 28 x 22 cm	1612101
Two steps	39 x 52 x 44 cm	1612102

Code 1612101

Code 1612102

NEW BED FISIOTECH

Model shown Code 1121E30C1SB1 + Accessories Code 1218020

Hydraulic control

All around foot bar switch

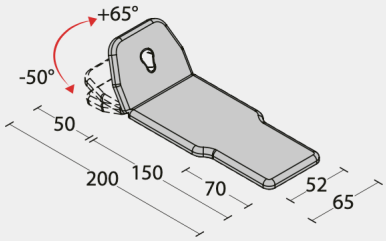

TECHNICAL SPECIFICATIONS	
Height adjustment	electrical or hydraulic 47-92 cm
Length	200 cm
Width	65 cm
Max. working load	200 kg
Headrest adjustment	with gas spring +65° -50°
Breathing hole and bung	as standard
Padding and upholstery fire-resistance rating	1IM
Padding: density/thickness	30 (kg/m³) / 4 cm
Lateral offset	24 cm
Under bed clearance (model with all round bar excluded)	12 cm
Weight	70 kg

ACCESSORIES	CODE
Paper roll holder	1210010
Four castors	1218020
Safety magnet	1221030
Safety double click	1221040

ACCESSORIES	CODE
Swiss plug	1221050
Presa UK	1221060
UK 3-pin plug	1210060

BED FISIOTECH

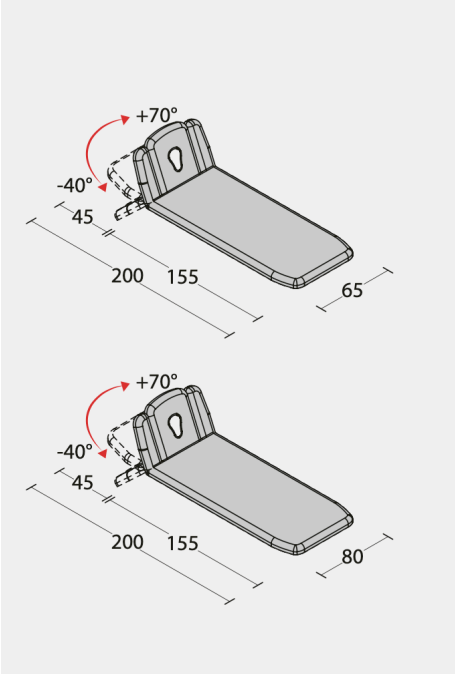

TECHNICAL SPECIFICATIONS	
Height adjustment	electrical or hydraulic 49-95 cm
Length	200 cm
Width	65 / 80 cm
Max. working load	200 kg
Headrest adjustment	with gas spring +70° -40°
Armrests on headrest adjustment	manual
Breathing hole and bung	as standard
Padding and upholstery fire-resistance rating	1IM
Padding: density/thickness	30 (kg/m³) / 4 cm
Lateral offset	none
Under bed clearance	12 cm
Weight	70 kg

ACCESSORIES	CODE
Paper roll holder	1218010
Four castors	1218020
Terry towel couch cover 65 cm	1210040
Terry towel couch cover 80 cm	1210050
Double-ply paper roll	1210060

ACCESSORIES	CODE
Safety magnet	1218030
Safety double click	1218040
Swiss plug	1218050
UK 3-pin plug	1218051

FURNITURE FISIOTECH

CHANGING ROOM BENCHES
Simple changing room bench, varnished steel tube frame and wooden planks.

TECHNICAL SPECIFICATIONS	
Height	45 cm
Depth	35 cm
MODELS	**CODE**
Width 1 mt	1613021
Width 2 mt	1613022

Code 1613021

Code 1613022

CHANGING ROOM BENCHES
Changing room bench with backrest, varnished steel tube frame and wooden planks.

TECHNICAL SPECIFICATIONS	
Height	85 cm
Depth	40 cm
MODELS	**CODE**
Width 1 mt	1613023
Width 2 mt	1613024

Code 1613023

Code 1613024

CHANGING ROOM BENCHES
Complete changing room bench, varnished steel tube frame and wooden planks.

TECHNICAL SPECIFICATIONS	
Height	180 cm
Depth	40 cm
MODELS	**CODE**
Width 1 mt	1613025
Width 2 mt	1613026

Code 1613025

Code 1613026

NEW BED FISIOTECH

Model shown Code 1121F30C1CB1 + Accessories Code 1218020

Model shown Code 1121F30C1SB1 + Accessories Code 1218020

Retractable castors

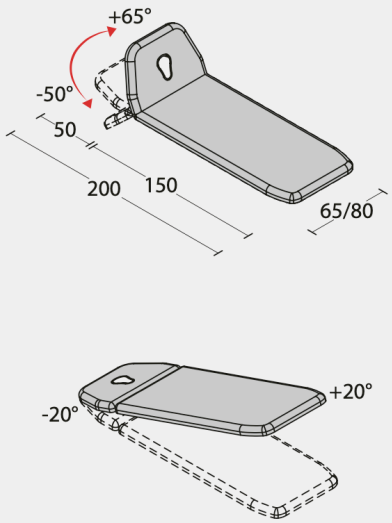

TECHNICAL SPECIFICATIONS	
Height adjustment	electrical or hydraulic 47-92 cm
Length	200 cm
Width	65 / 80 cm
Max. working load	200 kg
Headrest adjustment	with gas spring +65°-50°
Trendelenburg Position	with gas spring +20°
Breathing hole and bung	as standard
Padding and upholstery fire-resistance rating	1IM
Padding: density/thickness	30 (kg/m³) / 4 cm
Lateral offset	24 cm
Under bed clearance (model with all round bar excluded)	12 cm
Weight	75 kg

ACCESSORIES	CODE
Paper roll holder	1210010
Four castors	1218020
Safety magnet	1221030
Safety double click	1221040

ACCESSORIES	CODE
Swiss plug	1221050
UK 3-pin plug	1221060
Double-ply paper roll	1210060

BED FISIOTECH

Model shown Code 1118H30C1SG2 + Accessories Code 1218020

Manual armrest adjustment

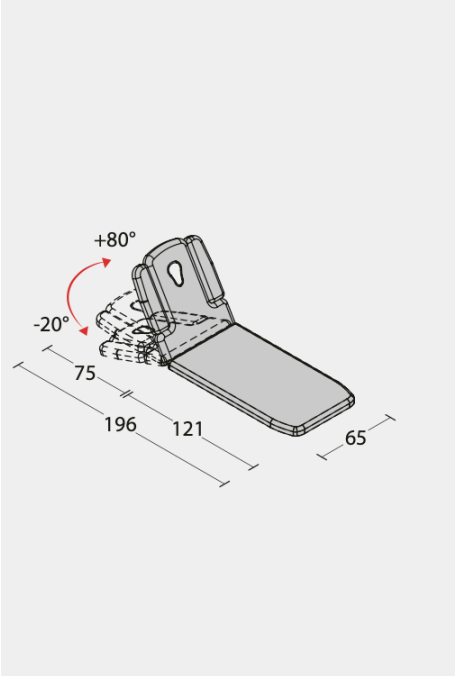

TECHNICAL SPECIFICATIONS	
Height adjustment	electrical or hydraulic 49-95 cm
Length	200 cm
Width	65 cm
Max. working load	200 kg
Headrest adjustment	with gas spring +80° -20°
Armrests on headrest adjustment	manual
Breathing hole and bung	as standard
Padding and upholstery fire-resistance rating	1IM
Padding: density/thickness	30 (kg/m³) / 4 cm
Lateral offset	none
Under bed clearance	12 cm

ACCESSORIES	CODE
Paper roll holder	1218010
Four castors	1218020
Terry towel couch cover 65 cm	1210040
Double-ply paper roll	1210060

ACCESSORIES	CODE
Safety magnet	1218030
Safety double click	1218040
Swiss plug	1218050
UK 3-pin plug	1218051

FURNITURE FISIOTECH

WALL CLOTHES RACK
Wall clothes rack with bag rack, varnished steel structure and wooden planks.

MODELS	CODE
Width 1 mt with 3 hooks	1613031
Width 2 mt with 6 hooks	1613032

Code 1613032

SIMPLE CLOTHES RACK
Wooden wall clothes rack.

MODELS	CODE
Width 1 mt with 3 hooks	1613033
Width 2 mt with 6 hooks	1613034

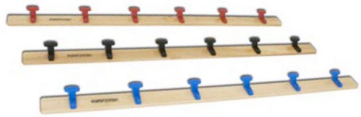

Code 1613034

FOOTREST
Wooden footrest with rubber feet..

MODELS	CODE
Width 1 mt	1613041
Width 2 mt	1613042

NEW BED FISIOTECH

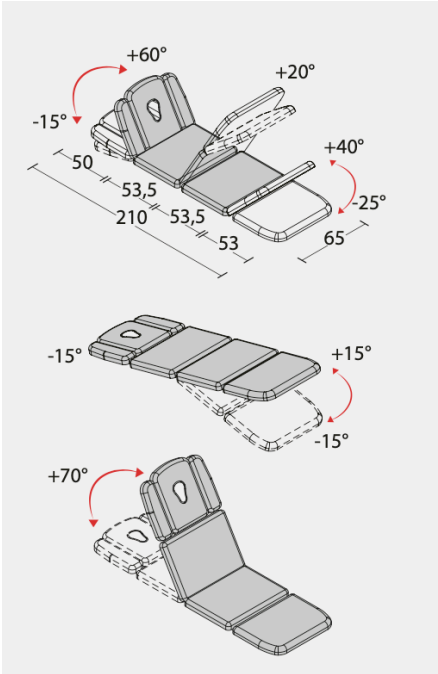

TECHNICAL SPECIFICATIONS	
Height adjustment	electrical 58-102 cm
Length	210 cm
Width	65 cm
Max. working load	200 kg
Headrest adjustment	with gas spring +60° -15°
Armrests on headrest adjustment	manual
Middle section adjustment	electrically +70° -15°
Upper footrest adjustment	electrically +20° -15°
Lower footrest adjustment	with gas spring +40° -25°
Trendelenburg / AntiTrendelenburg position	with gas spring and electrically 15°
Breathing hole and bung	as standard
Padding and upholstery fire-resistance rating	1IM
Padding: density/thickness	30 (kg/m³) / 4 cm
Lateral offset	24 cm
Under bed clearance (model with all round bar excluded)	12 cm
Weight	105 kg

ACCESSORIES	CODE
Floor paper roll holder	1210020
Four castors	1218020
Safety magnet	1221030

ACCESSORIES	CODE
Swiss plug	1221050
UK 3-pin plug	1221060
Double-ply paper roll	1210060

BED FISIOTECH

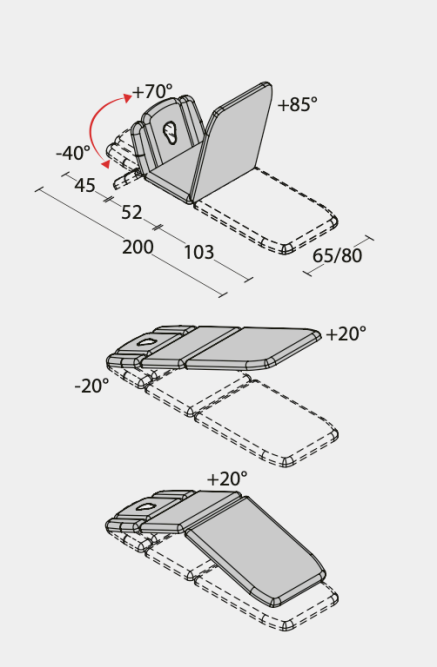

TECHNICAL SPECIFICATIONS	
Height adjustment	electrical or hydraulic 49-95 cm
Length	200 cm
Width	65 / 80 cm
Max. working load	200 kg
Headrest adjustment	with gas spring +70° -40°
Armrests on headrest adjustment	manual
Middle section adjustment	with gas spring or electrically +20°
Footrest adjustment	with gas spring +85°
Trendelenburg position	+20°
Breathing hole and bung	as standard
Padding and upholstery fire-resistance rating	1IM
Padding: density/thickness	30 (kg/m³) / 4 cm
Lateral offset	none
Under bed clearance	12 cm
Weight	70 kg

ACCESSORIES	CODE
Paper roll holder	1218010
Four castors	1218020
Terry towel couch cover 65 cm	1210040
Terry towel couch cover 80 cm	1210050
Double-ply paper roll	1210060

ACCESSORIES	CODE
Safety magnet	1218030
Safety double click	1218040
Swiss plug	1218050
UK 3-pin plug	1218051

NEW BED FISIOTECH

Model shown Code 1121N30C2SG4 + Accessories Code 1218020

All around foot bar switch

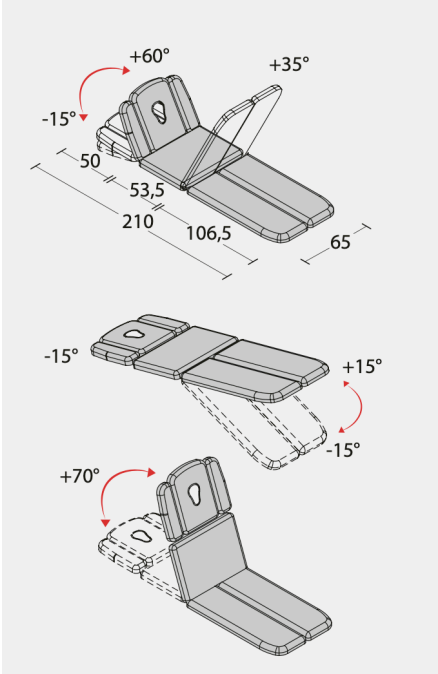

TECHNICAL SPECIFICATIONS	
Height adjustment	electrical 58-102 cm
Length	210 cm
Width	65 cm
Max. working load	200 kg
Headrest adjustment	with gas spring +60° -15°
Armrests on headrest adjustment	manual
Middle section adjustment	electrically +70° -15°
Footrest adjustment	with gas spring +35° -15°
Trendelenburg / AntiTrendelenburg position	with gas spring and electrically 15°
Breathing hole and bung	as standard
Padding and upholstery fire-resistance rating	1IM
Padding: density/thickness	30 (kg/m³) / 4 cm
Lateral offset	24 cm
Under bed clearance (model with all round bar excluded)	12 cm
Weight	100 kg

OPTIONAL	CODICE
Floor paper roll holder	1210020
Four castors	1218020
Safety magnet	1221030

OPTIONAL	CODICE
Swiss plug	1221050
UK 3-pin plug	1221060
Double-ply paper roll	1210060

BED FISIOTECH

Model shown Code 1118F20A15A1 + Accessories Code 1218020

Manual armrest adjustment

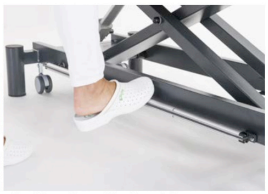

Aluminium all around foot bar switch

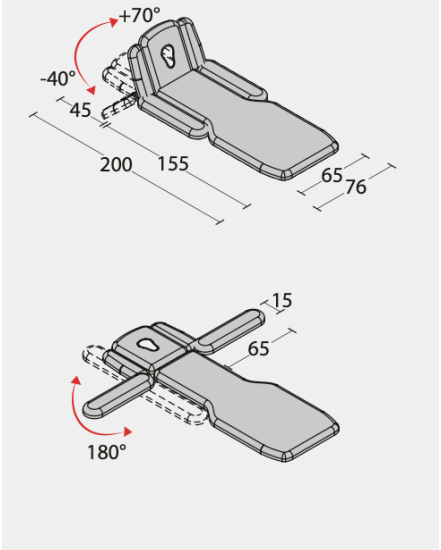

TECHNICAL SPECIFICATIONS	
Height adjustment	electrical or hydraulic 49-95 cm
Length	200 cm
Width	65 cm
Max. working load	200 kg
Headrest adjustment	with gas spring +70° -40°
Armrests on headrest adjustment	manual
Removable armrests rotating by	180°
Breathing hole and bung	as standard
Padding and upholstery fire-resistance rating	1IM
Padding: density/thickness	30 (kg/m³) / 4 cm
Lateral offset	none
Under bed clearance	12 cm
Weight	70 kg

ACCESSORIES	CODE
Paper roll holder	1218010
Four castors	1218020
Double-ply paper roll	1210060
Safety magnet	1218030

ACCESSORIES	CODE
Safety double click	1218040
Swiss plug	1218050
UK 3-pin plug	1218051

NEW BED FISIOTECH

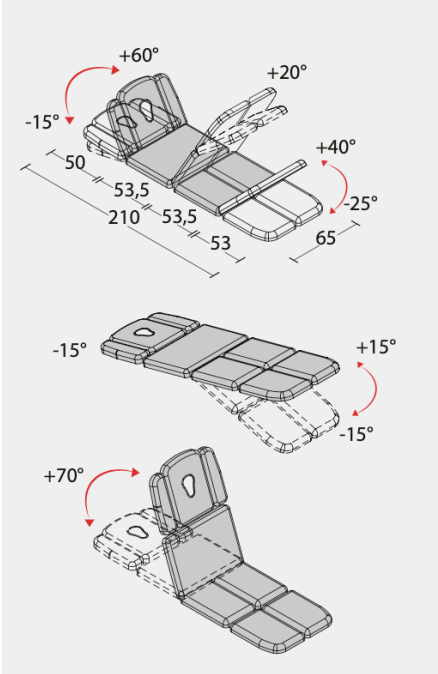

TECHNICAL SPECIFICATIONS	
Height adjustment	electrical 58-102 cm
Length	210 cm
Width	65 cm
Max. working load	200 kg
Headrest adjustment	with gas spring +60° -15°
Armrests adjustment	manual
Middle section adjustment	electrically +70° -15°
Footrests adjustment	with gas spring +35° -15°
Trendelenburg / AntiTrendelenburg position	with gas spring and electrically 15°
Breathing hole and bung	as standard
Padding and upholstery fire-resistance rating	1IM
Padding: density/thickness	30 (kg/m³) / 4 cm
Lateral offset	24 cm
Under bed clearance (model with all round bar excluded)	12 cm
Weight	105 kg

ACCESSORIES	CODE
Floor paper roll holder	1210020
Four castors	1218020
Safety magnet	1221030

ACCESSORIES	CODE
Swiss plug	1221050
UK 3-pin plug	1221060
Double-ply paper roll	1210060

BED FISIOTECH

Model shown Code 1118G30C2SN1 + Accessories Code 1218020

Sitting position

Trendelenburg position

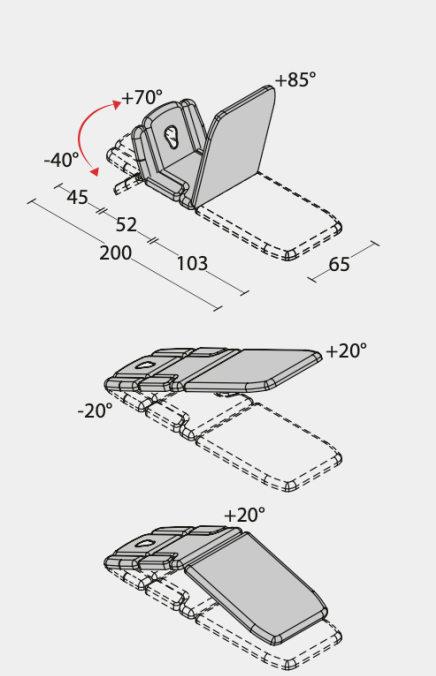

TECHNICAL SPECIFICATIONS	
Height adjustment	electrical 49-95 cm
Length	200 cm
Width	65 cm
Max. working load	200 kg
Headrest adjustment	with gas spring +70° -40°
Armrests on headrest adjustment	manual
Middle section adjustment	electrically +20°
Middle section armrests	foldable
Footrest adjustment	with gas spring +85°
Trendelenburg position	+20°
Breathing hole and bung	as standard
Padding and upholstery fire-resistance rating	1IM
Padding: density/thickness	30 (kg/m³) / 4 cm
Lateral offset	none
Under bed clearance	12 cm
Weight	70 kg

ACCESSORIES	CODE
Paper roll holder	1218010
Four castors	1218020
Terry towel couch cover 65 cm	1210040
Double-ply paper roll	1210060

ACCESSORIES	CODE
Safety magnet	1218030
Safety double click	1218040
Swiss plug	1218050
UK 3-pin plug	1218051

BED FISIOTECH

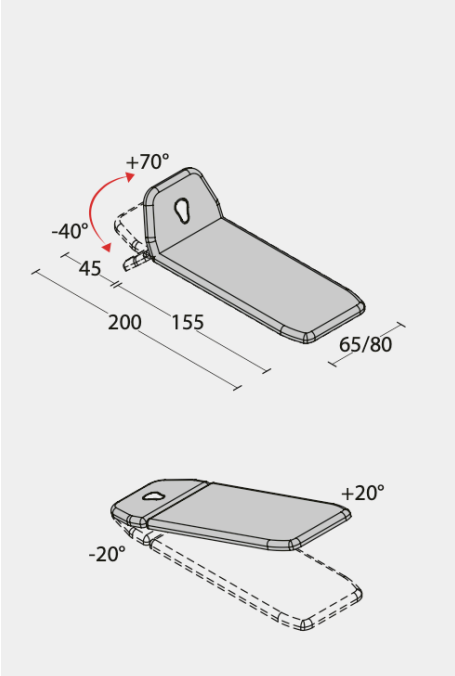

TECHNICAL SPECIFICATIONS	
Height adjustment	electrical or hydraulic 49-95 cm
Length	200 cm
Width	65 / 80 cm
Max. working load	200 kg
Headrest adjustment	with gas spring +70° -40°
Trendelenburg position	with gas spring or electrically +20°
Breathing hole and bung	as standard
Padding and upholstery fire-resistance rating	1IM
Padding: density/thickness	30 (kg/m³) / 4 cm
Lateral offset	none
Under bed clearance	12 cm
Weight	70 kg

ACCESSORIES	CODE
Paper roll holder	1218010
Four castors	1218020
Terry towel couch cover 65 cm	1210040
Terry towel couch cover 80 cm	1210050
Double-ply paper roll	1210060

ACCESSORIES	CODE
Safety magnet	1218030
Safety double click	1218040
Swiss plug	1218050
UK 3-pin plug	1218051

BED FISISOTECH

Model shown Code 1118N20C1SA1 + Accessories Code 1218020

Trendelenburg position

Hydraulic control

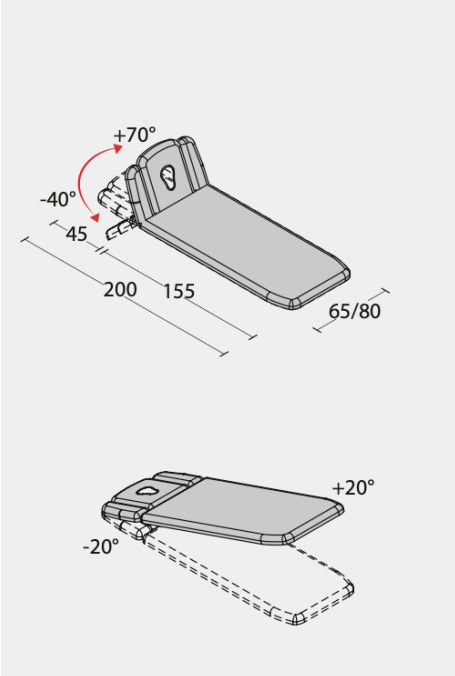

TECHNICAL SPECIFICATIONS	
Height adjustment	electrical or hydraulic 49-95 cm
Length	200 cm
Width	65 / 80 cm
Max. working load	200 kg
Headrest adjustment	with gas spring +70° -40°
Armrests on headrest adjustment	manual
Trendelenburg position	with gas spring or electrically +20°
Breathing hole and bung	as standard
Padding and upholstery fire-resistance rating	1IM
Padding: density/thickness	30 (kg/m³) / 4 cm
Lateral offset	none
Under bed clearance	12 cm
Weight	70 kg

ACCESSORIES	CODE
Paper roll holder	1218010
Four castors	1218020
Terry towel couch cover 65 cm	1210040
Terry towel couch cover 80 cm	1210050
Double-ply paper roll	1210060

ACCESSORIES	CODE
Safety magnet	1218030
Safety double click	1218040
Swiss plug	1218050
UK 3-pin plug	1218051

BED FISIOTECH

Model shown Code 1118P30C1SB1 + Accessories Code 1218020

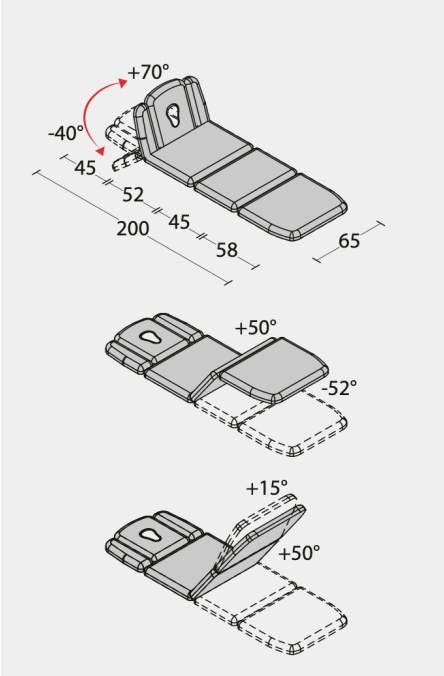

TECHNICAL SPECIFICATIONS	
Height adjustment	electrical or hydraulic 49-95 cm
Length	200 cm
Width	65 cm
Max. working load	200 kg
Headrest adjustment	with gas spring +70° -40°
Armrests on headrest adjustment	manual
Middle section	fixed
Upper footrest adjustment	with gas spring +50°
Lower footrest adjustment	with gas spring +15° -52°
Breathing hole and bung	as standard
Padding and upholstery fire-resistance rating	1IM
Padding: density/thickness	30 (kg/m³) / 4 cm
Lateral offset	none
Under bed clearance	12 cm
Weight	90 kg

ACCESSORIES	CODE
Paper roll holder	1218010
Four castors	1218020
Terry towel couch cover 65 cm	1210040
Double-ply paper roll	1210060

ACCESSORIES	CODE
Safety magnet	1218030
Safety double click	1218040
Swiss plug	1218050
UK 3-pin plug	1218051

BED FISISOTECH

Model shown Code 1111A10C1SB2 + Accessories Code 1211010

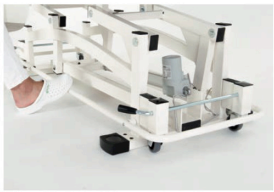

All around foot bar switch

Hydraulic control

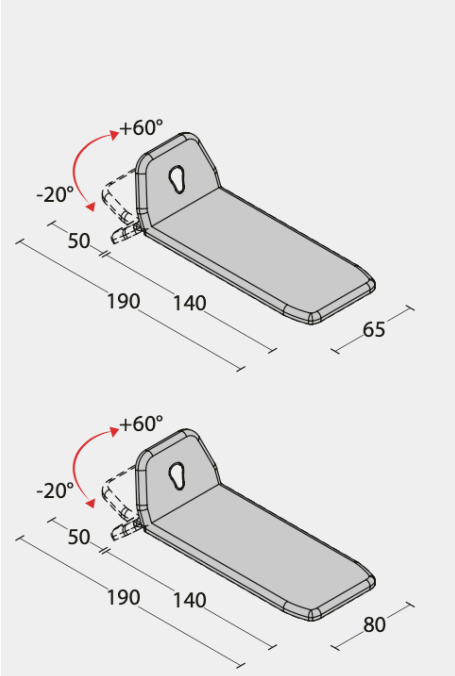

TECHNICAL SPECIFICATIONS	
Height adjustment	electrical or hydraulic 45-90 cm
Length	190 cm
Width	65 / 80 cm
Max. working load	200 kg
Headrest adjustment	with gas spring +60° -20°
Breathing hole and bung	as standard
Padding and upholstery fire-resistance rating	1IM
Padding: density/thickness	30 (kg/m³) / 4 cm
Lateral offset	17 cm
Weight	70 kg

ACCESSORIES	CODE
Paper roll holder	1210010
Four castors	1211010
Collapsible cotsides	1210030
Terry towel couch cover 65 cm	1210040
Terry towel couch cover 80 cm	1210050

ACCESSORIES	CODE
Double-ply paper roll	1210060
Safety magnet	1211020
Safety double click	1211030
Swiss plug	1211040
UK 3-pin plug	1211041

BED FISIOTECH

Model shown Code 1111B10C1SB1 + Accessories Code 1211010

Trendelenburg position

Paper roll holder

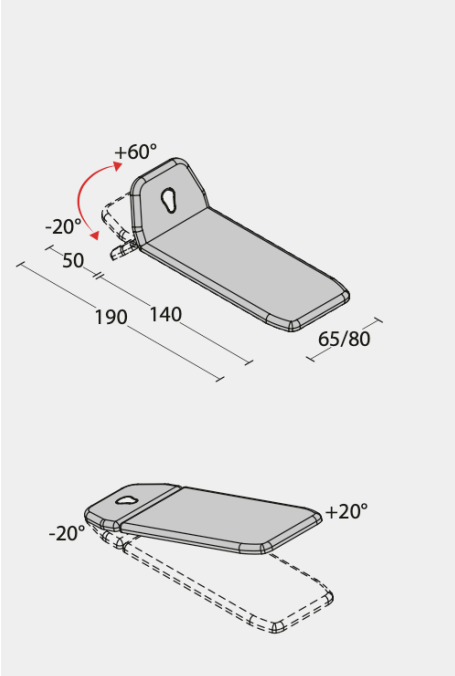

TECHNICAL SPECIFICATIONS	
Height adjustment	electrical or hydraulic 45-90 cm
Length	190 cm
Width	65 / 80 cm
Max. working load	200 kg
Headrest adjustment	with gas spring +60° -20°
Trendelenburg position	with gas spring +20°
Breathing hole and bung	as standard
Padding and upholstery fire-resistance rating	1IM
Padding: density/thickness	30 (kg/m³) / 4 cm
Lateral offset	17 cm
Weight	70 kg

ACCESSORIES	CODE
Paper roll holder	1210010
Four castors	1211010
Terry towel couch cover 65 cm	1210040
Terry towel couch cover 80 cm	1210050
Double-ply paper roll	1210060

ACCESSORIES	CODE
Safety magnet	1211020
Safety double click	1211030
Swiss plug	1211040
UK 3-pin plug	1211041

BED FISIOTECH

Model shown Code 1111C10C1SB1 + Accessories Code 1211010

All around foot bar switch

Hydraulic control

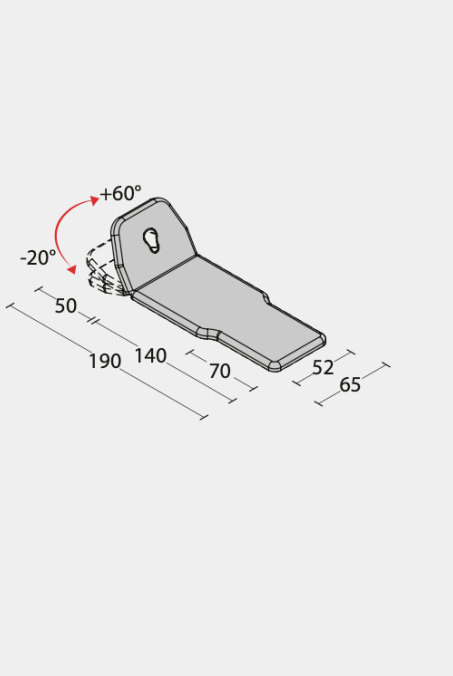

TECHNICAL SPECIFICATIONS	
Height adjustment	electrical or hydraulic 45-90 cm
Length	190 cm
Width	65 cm
Max. working load	200 kg
Headrest adjustment	with gas spring +60° -20°
Breathing hole and bung	as standard
Padding and upholstery fire-resistance rating	1IM
Padding: density/thickness	30 (kg/m³) / 4 cm
Lateral offset	17 cm
Weight	70 kg

ACCESSORIES	CODE
Paper roll holder	1218010
Four castors	1211010
Double-ply paper roll	1210060
Safety magnet	1211020

ACCESSORIES	CODE
Safety double click	1211030
Swiss plug	1211040
UK 3-pin plug	1211041

BED FISIOTECH

Model shown Code 1111D10C1SA1 + Accessories Code 1211010

Terry towel couch cover

Manual armrest adjustment

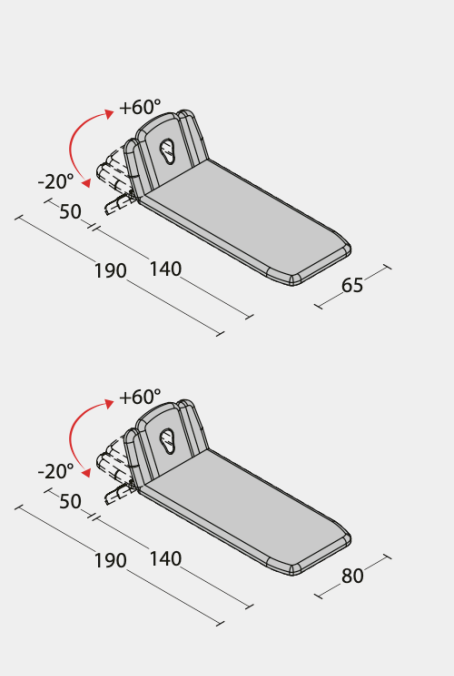

TECHNICAL SPECIFICATIONS	
Height adjustment	electrical or hydraulic 45-90 cm
Length	190 cm
Width	65 / 80 cm
Max. working load	200 kg
Headrest adjustment	with gas spring +60° -20°
Armrests on headrest adjustment	manual
Breathing hole and bung	as standard
Padding and upholstery fire-resistance rating	1IM
Padding: density/thickness	30 (kg/m³) / 4 cm
Lateral offset	17 cm
Weight	70 kg

ACCESSORIES	CODE
Paper roll holder	1210010
Four castors	1211010
Collapsible cotsides	1210030
Terry towel couch cover 65 cm	1210040
Terry towel couch cover 80 cm	1210050

ACCESSORIES	CODE
Double-ply paper roll	1210060
Safety magnet	1211020
Safety double click	1211030
Swiss plug	1211040
UK 3-pin plug	1211041

BED FISIOTECH

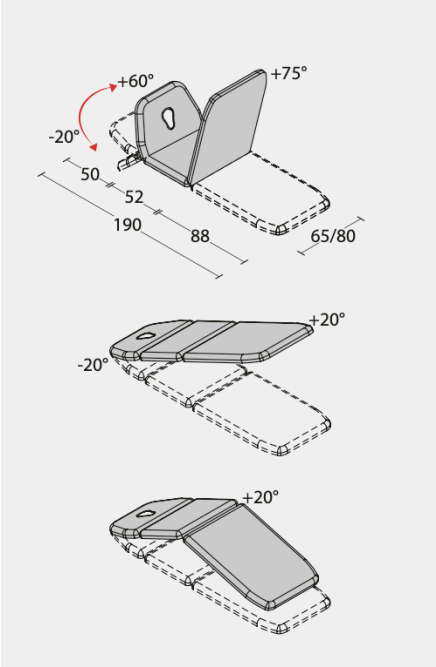

TECHNICAL SPECIFICATIONS	
Height adjustment	electrical or hydraulic 45-90 cm
Length	190 cm
Width	65 / 80 cm
Max. working load	200 kg
Headrest adjustment	with gas spring +60° -20°
Middle section adjustment	with gas spring +20°
Footrest adjustment	with gas spring +75°
Trendelenburg position	+20°
Breathing hole and bung	as standard
Padding and upholstery fire-resistance rating	1IM
Padding: density/thickness	30 (kg/m³) / 4 cm
Lateral offset	17 cm
Weight	70 kg

ACCESSORIES	CODE
Paper roll holder	1210010
Four castors	1211010
Terry towel couch cover 65 cm	1210040
Terry towel couch cover 80 cm	1210050
Double-ply paper roll	1210060

ACCESSORIES	CODE
Safety magnet	1211020
Safety double click	1211030
Swiss plug	1211040
UK 3-pin plug	1211041

BED FISIOTECH

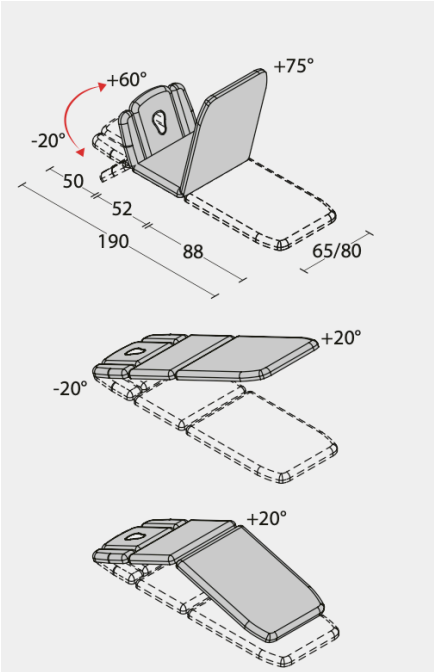

TECHNICAL SPECIFICATIONS	
Height adjustment	electrical or hydraulic 45-90 cm
Length	190 cm
Width	65 / 80 cm
Max. working load	200 kg
Headrest adjustment	with gas spring +60° -20°
Armrests on headrest adjustment	manual
Middle section adjustment	with gas spring +20°
Footrest adjustment	with gas spring +75°
Trendelenburg position	+20°
Breathing hole and bung	as standard
Padding and upholstery fire-resistance rating	1IM
Padding: density/thickness	30 (kg/m³) / 4 cm
Lateral offset	17 cm
Weight	70 kg

ACCESSORIES	CODE
Paper roll holder	1210010
Four castors	1211010
Terry towel couch cover 65 cm	1210040
Terry towel couch cover 80 cm	1210050
Double-ply paper roll	1210060

ACCESSORIES	CODE
Safety magnet	1211020
Safety double click	1211030
Swiss plug	1211040
UK 3-pin plug	1211041

BED FISIOTECH

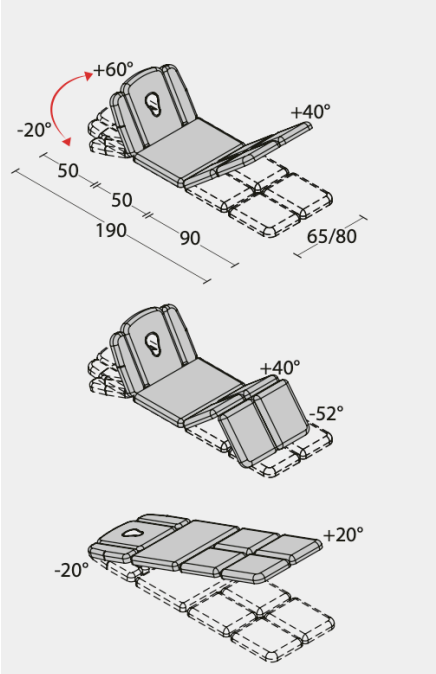

TECHNICAL SPECIFICATIONS	
Height adjustment	electrical or hydraulic 45-90 cm
Length	190 cm
Width	65 / 80 cm
Max. working load	200 kg
Headrest adjustment	with gas spring +60° -20°
Armrests on headrest adjustment	manual
Middle section adjustment	with gas spring +20°
Footrests adjustment	with gas spring +40° -52°
Trendelenburg position	+20°
Breathing hole and bung	as standard
Padding and upholstery fire-resistance rating	1IM
Padding: density/thickness	30 (kg/m³) / 4 cm
Lateral offset	17 cm
Weight	70 kg

ACCESSORIES	CODE
Paper roll holder	1210010
Four castors	1211010
Terry towel couch cover 65 cm	1210040
Terry towel couch cover 80 cm	1210050
Double-ply paper roll	1210060

ACCESSORIES	CODE
Safety magnet	1211020
Safety double click	1211030
Swiss plug	1211040
UK 3-pin plug	1211041

BED FISIOTECH

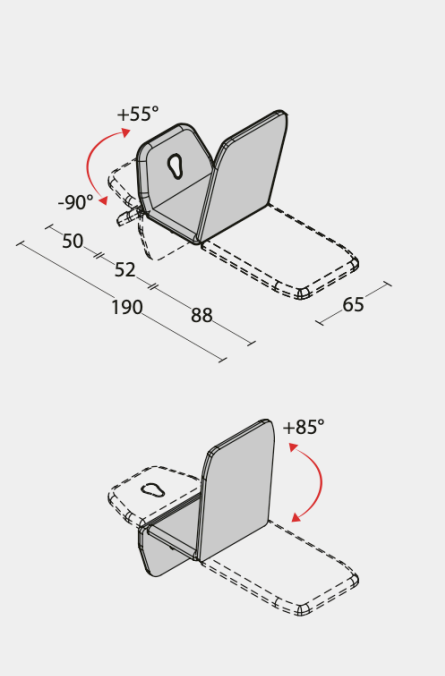

TECHNICAL SPECIFICATIONS	
Height adjustment	electrical or hydraulic 56-96 cm
Length	190 cm
Width	65 cm
Max. working load	200 kg
Headrest adjustment	with gas spring +55° -90°
Middle section	fixed
Footrest adjustment	with gas spring +85°
Breathing hole and bung	as standard
Padding and upholstery fire-resistance rating	1IM
Padding: density/thickness	30 (kg/m³) / 4 cm
Lateral offset	17 cm
Weight	70 kg

ACCESSORIES	CODE
Paper roll holder	1210010
Four castors	1211010
Terry towel couch cover 65 cm	1210040
Double-ply paper roll	1210060

ACCESSORIES	CODE
Safety magnet	1211020
Safety double click	1211030
Swiss plug	1211040
UK 3-pin plug	1211041

BED FISIOTECH

Model shown Code 1112A10R05G3 + Accessories Code 1212010

Retractable castors

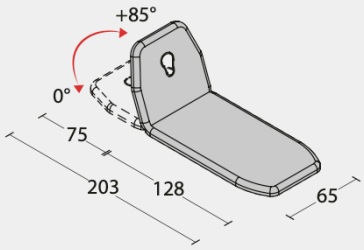

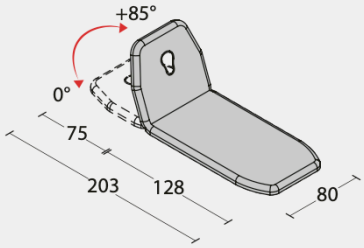

TECHNICAL SPECIFICATIONS	
Height adjustment	electrical or hydraulic 49-81 cm
Length	203 cm
Width	65 / 80 cm
Max. working load	200 kg
Headrest adjustment	with gas spring 0° +85°
Breathing hole and bung	as standard
Padding and upholstery fire-resistance rating	1IM
Padding: density/thickness	30 (kg/m³) / 4 cm
Lateral offset	35 cm
Under bed clearance	14,5 cm
Weight	60 kg

ACCESSORIES	CODE
Four castors	1212010
Paper roll holder	1210010
Collapsible cotsides	1210030
Terry towel couch cover 65 cm	1210040
Terry towel couch cover 80 cm	1210050

ACCESSORIES	CODE
Double-ply paper roll	1210060
Safety magnet	1212020
Safety double click	1212030
Swiss plug	1212040
UK 3-pin plug	1212041

BED FISIOTECH

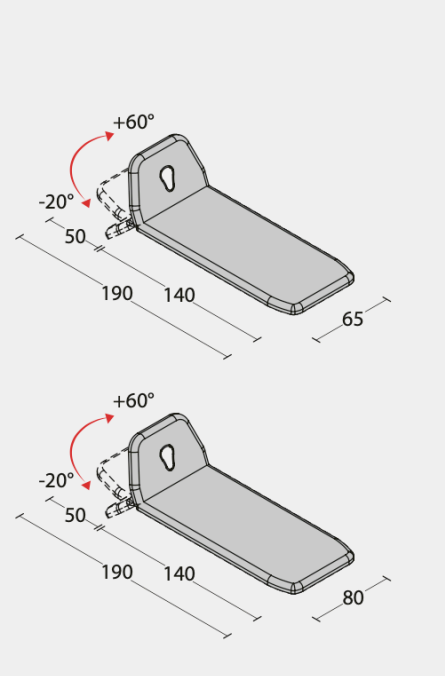

TECHNICAL SPECIFICATIONS	
Height adjustment	electrical or hydraulic 49-81 cm
Length	190 cm
Width	65 / 80 cm
Max. working load	200 kg
Headrest adjustment	with gas spring +60° -20°
Breathing hole and bung	as standard
Padding and upholstery fire-resistance rating	1IM
Padding: density/thickness	30 (kg/m³) / 4 cm
Lateral offset	35 cm
Under bed clearance	14,5 cm
Weight	60 kg

ACCESSORIES	CODE
Four castors	1212010
Paper roll holder	1210010
Collapsible cotsides	1210030
Terry towel couch cover 65 cm	1210040
Terry towel couch cover 80 cm	1210050

ACCESSORIES	CODE
Double-ply paper roll	1210060
Safety magnet	1212020
Safety double click	1212030
Swiss plug	1212040
UK 3-pin plug	1212041

BED FISIOTECH

Model shown Code 1112C10C1SG1 + Accessories Code 1212010

Sitting position

All around foot bar switch

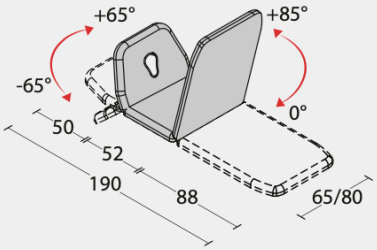

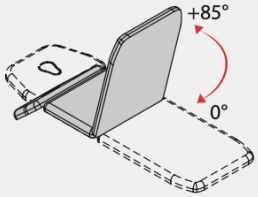

TECHNICAL SPECIFICATIONS	
Height adjustment	electrical or hydraulic 49-81 cm
Length	190 cm
Width	65 / 80 cm
Max. working load	200 kg
Headrest adjustment	with gas spring +65° -65°
Middle section	fixed
Footrest adjustment	with gas spring +85°
Breathing hole and bung	as standard
Padding and upholstery fire-resistance rating	1IM
Padding: density/thickness	30 (kg/m³) / 4 cm
Lateral offset	35 cm
Under bed clearance	14,5 cm
Weight	60 kg

ACCESSORIES	CODE
Four castors	1212010
Paper roll holder	1210010
Terry towel couch cover 65 cm	1210040
Terry towel couch cover 80 cm	1210050
Double-ply paper roll	1210060

ACCESSORIES	CODE
Safety magnet	1212020
Safety double click	1212030
Swiss plug	1212040
UK 3-pin plug	1212041

BED FISIOTECH

Model shown Code 1112D10P1SA1 + Accessories Code 1212010

Hydraulic control

Manual armrest adjustment

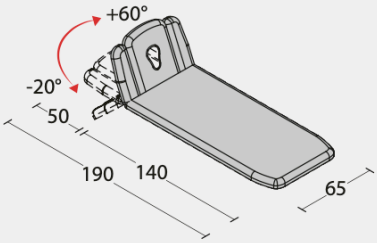

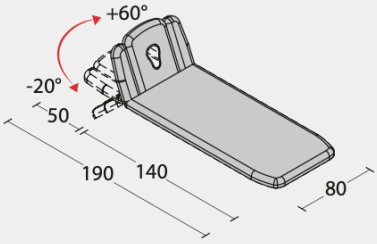

TECHNICAL SPECIFICATIONS	
Height adjustment	electrical or hydraulic 49-81 cm
Length	190 cm
Width	65 / 80 cm
Max. working load	200 kg
Headrest adjustment	with gas spring +60° -20°
Armrests on headrest adjustment	manual
Breathing hole and bung	as standard
Padding and upholstery fire-resistance rating	1IM
Padding: density/thickness	30 (kg/m³) / 4 cm
Lateral offset	35 cm
Under bed clearance	14,5 cm
Weight	60 kg

ACCESSORIES	CODE
Four castors	1212010
Paper roll holder	1210010
Collapsible cotsides	1210030
Terry towel couch cover 65 cm	1210040
Terry towel couch cover 80 cm	1210050

ACCESSORIES	CODE
Double-ply paper roll	1210060
Safety magnet	1212020
Safety double click	1212030
Swiss plug	1212040
UK 3-pin plug	1212041

BED FISIOTECH

Model shown Code 1113A14P1NB1 + Accessories Code 1213010

Retractable castors

Collapsible cotsides

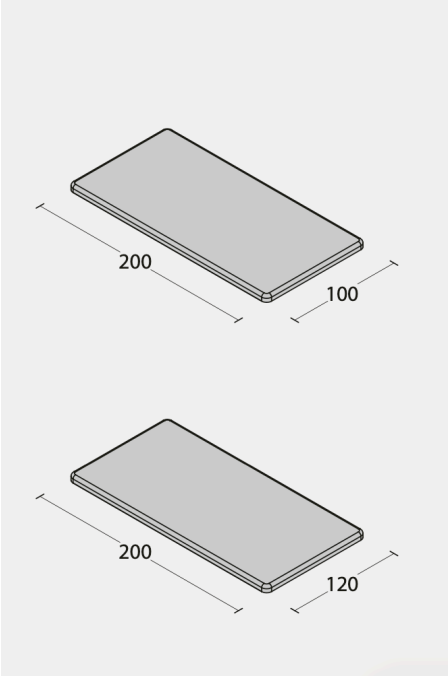

TECHNICAL SPECIFICATIONS	
Height adjustment	electrical 47-80 cm
Length	200 cm
Width	100 / 120 cm
Max. working load	200 kg
Padding and upholstery fire-resistance rating	1IM
Padding: density/thickness	30 (kg/m³) / 4 cm
Lateral offset	32 cm
Under bed clearance	17 cm
Weight	70 kg

ACCESSORIES	CODE
Four castors	1213010
Double foot pedal	1213030
Collapsible cotsides	1210030
Safety magnet	1213040

ACCESSORIES	CODE
Safety double click	1213050
Swiss plug	1213060
UK 3-pin plug	1213061

BED FISIOTECH

Model shown Code 1113B15P1NV1 + Accessories Code 1213010

Headrest adjustment with gas spring

Retractable castors

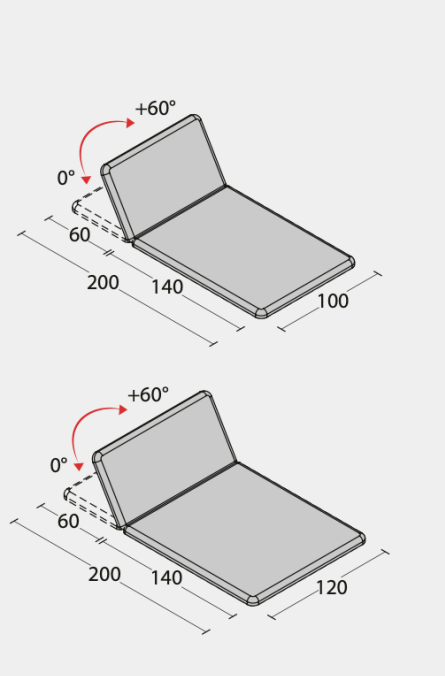

TECHNICAL SPECIFICATIONS	
Height adjustment	electrical 47-80 cm
Length	200 cm
Width	100 / 120 cm
Max. working load	200 kg
Headrest adjustment	with gas spring +60°
Padding and upholstery fire-resistance rating	1IM
Padding: density/thickness	30 (kg/m³) / 4 cm
Lateral offset	32 cm
Under bed clearance	17 cm
Weight	70 kg

ACCESSORIES	CODE
Four castors	1213010
Double foot pedal	1213030
Collapsible cotsides	1210030
Safety magnet	1213040

ACCESSORIES	CODE
Safety double click	1213050
Swiss plug	1213060
UK 3-pin plug	1213061

BED FISIOTECH

Model shown Code 1113C14P1NB1 + Accessories Code 1213010

Manual headrest adjustment

Retractable castors

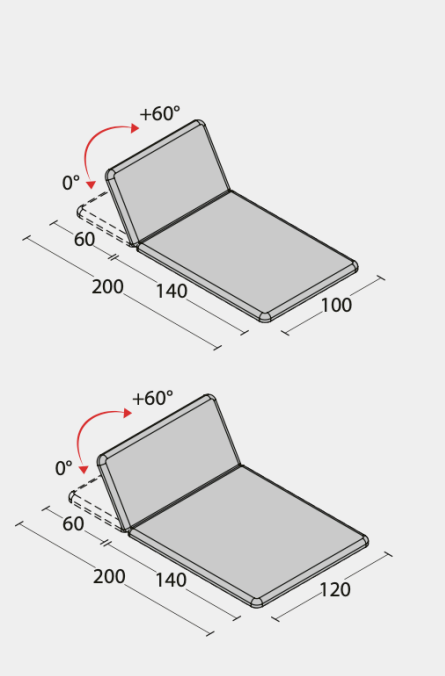

TECHNICAL SPECIFICATIONS	
Height adjustment	electrical 47-80 cm
Length	200 cm
Width	100 / 120 cm
Max. working load	200 kg
Headrest adjustment	manual +60°
Padding and upholstery fire-resistance rating	1IM
Padding: density/thickness	30 (kg/m³) / 4 cm
Lateral offset	32 cm
Under bed clearance	17 cm
Weight	70 kg

ACCESSORIES	CODE
Four castors	1213010
Double foot pedal	1213030
Collapsible cotsides	1210030
Safety magnet	1213040

ACCESSORIES	CODE
Safety double click	1213050
Swiss plug	1213060
UK 3-pin plug	1213061

BED FISIOTECH

Model shown Code 1113D15P1NB1 + Accessories Code 1213020

Retractable castors

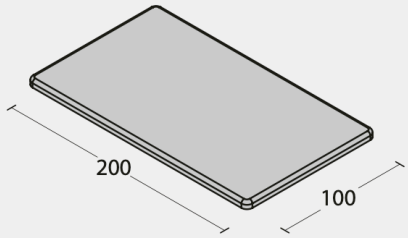

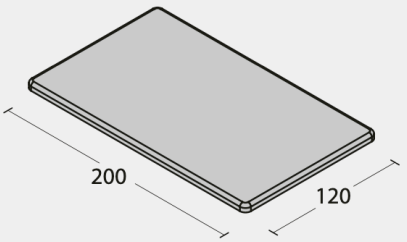

TECHNICAL SPECIFICATIONS	
Height adjustment	electrical 49-90 cm
Length	200 cm
Width	100 / 120 cm
Max. working load	350 kg
Padding and upholstery fire-resistance rating	1IM
Padding: density/thickness	30 (kg/m³) / 4 cm
Lateral offset	30 cm
Under bed clearance	15 cm
Weight	100 kg

ACCESSORIES	CODE
Four castors	1213020
Double foot pedal	1213030
Collapsible cotsides	1210030
Safety magnet	1213040

ACCESSORIES	CODE
Safety double click	1213050
Swiss plug	1213060
UK 3-pin plug	1213061

BED FISIOTECH

Model shown Code 1113E15P1NB1 + Accessories Code 1213020

Headrest adjustment with gas spring

Frame with max working load of 350 kg

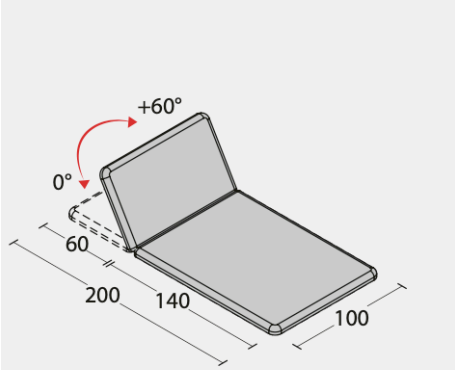

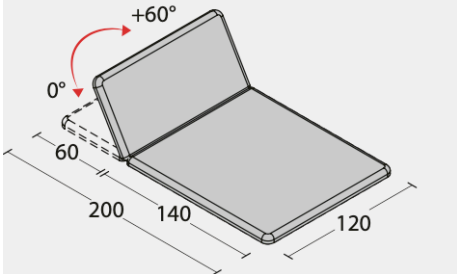

TECHNICAL SPECIFICATIONS	
Height adjustment	electrical 49-90 cm
Length	200 cm
Width	100 / 120 cm
Max. working load	350 kg
Headrest adjustment	with gas spring +60°
Padding and upholstery fire-resistance rating	1IM
Padding: density/thickness	30 (kg/m³) / 4 cm
Lateral offset	30 cm
Under bed clearance	15 cm
Weight	100 kg

ACCESSORIES	CODE
Four castors	1213020
Double foot pedal	1213030
Collapsible cotsides	1210030
Safety magnet	1213040

ACCESSORIES	CODE
Safety double click	1213050
Swiss plug	1213060
UK 3-pin plug	1213061

BED FISIOTECH

Model shown Code 1113F16P1NB1 + Accessories Code 1213021

Retractable castors

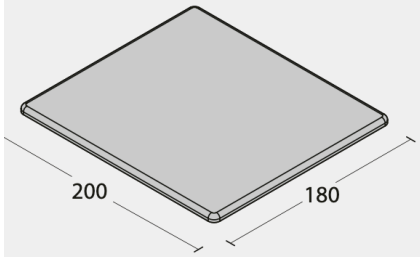

TECHNICAL SPECIFICATIONS	
Height adjustment	electrical 49-90 cm
Length	200 cm
Width	180 cm
Max. working load	250 kg
Padding and upholstery fire-resistance rating	1IM
Padding: density/thickness	30 (kg/m3) / 4 cm
Lateral offset	30 cm
Under bed clearance	15 cm
Weight	100 kg

ACCESSORIES	CODE
Four castors	1213021
Double foot pedal	1213030
Collapsible cotsides	1210030
Safety magnet	1213040

ACCESSORIES	CODE
Safety double click	1213050
Swiss plug	1213060
UK 3-pin plug	1213061

BED FISIOTECH

Model shown Code 1113R15S0NV1

Adjustable foot

Model shown Code 1113R16S0NB1

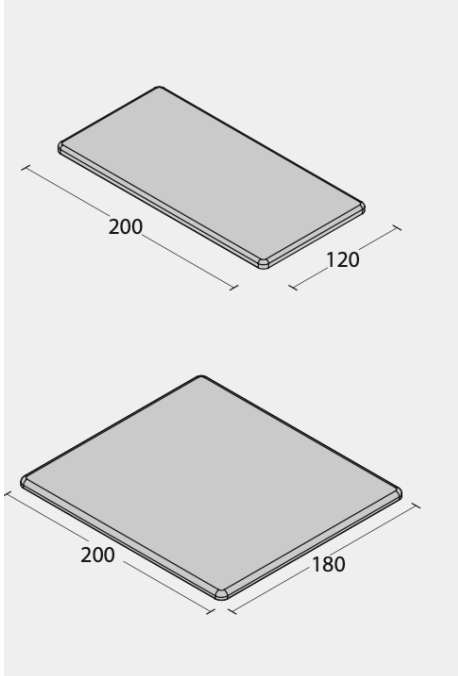

TECHNICAL SPECIFICATIONS	
Fixed height	50 cm
Length	200 cm
Width	120 / 180 cm
Max. working load	200 kg
Adjustable foot	
Padding and upholstery fire-resistance rating	1IM
Padding: density/thickness	30 (kg/m3) / 4 cm
Weight	50 kg

BED FISIOTECH

Model shown Code 1113S15S0NB1

Manual headrest adjustment

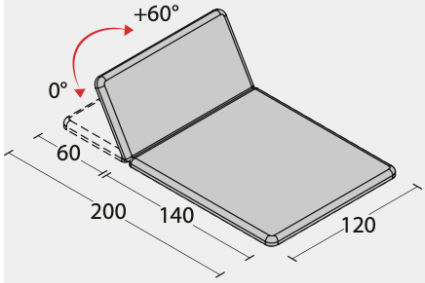

TECHNICAL SPECIFICATIONS	
Fixed height	50 cm
Length	200 cm
Width	120 cm
Max. working load	200 kg
Headrest adjustment	manual +60°
Adjustable foot	
Padding and upholstery fire-resistance rating	1IM
Padding: density/thickness	30 (kg/m3) / 4 cm
Weight	50 kg

BED FISIOTECH

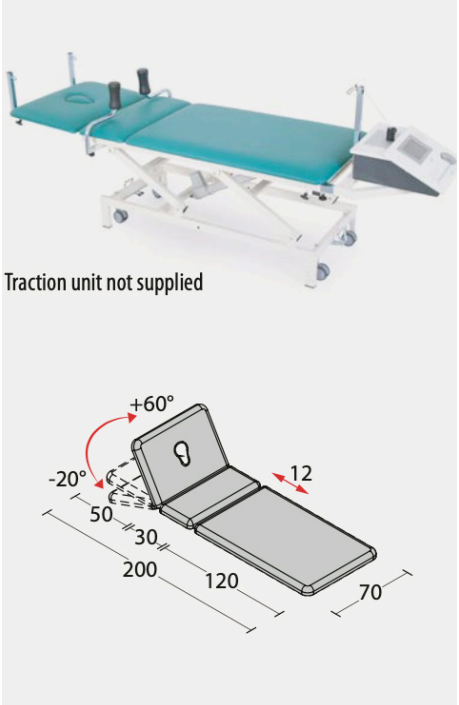

TECHNICAL SPECIFICATIONS	
Height adjustment	electrical 55-86 cm
Length	200 cm
Width	70 cm
Max. working load	200 kg
Headrest adjustment	with gas spring +60° -20°
Middle section	fixed
Main section	sliding by 12 cm
Chromed supports	as standard
With 4 castors	∅ 75 cm
Breathing hole and bung	as standard
Padding and upholstery fire-resistance rating	1IM
Padding: density/thickness	30 (kg/m³) / 4 cm
Lateral offset	32 cm
Under bed clearance	12 cm
Weight	70 kg

BED FISIOTECH

Model shown Code 1114B12S0NB1

SUPPLIED

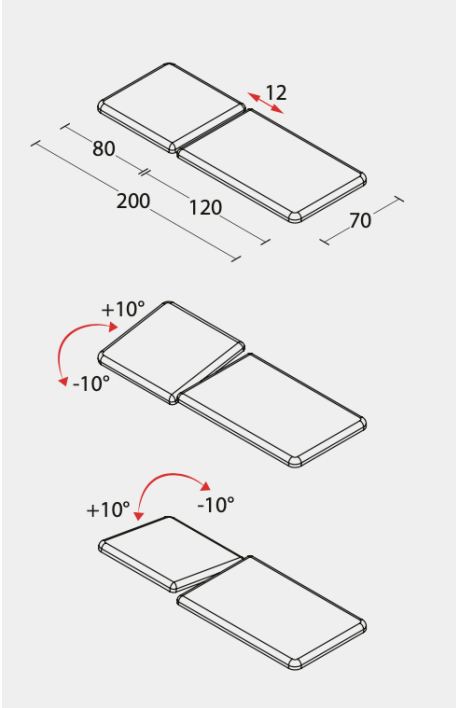

TECHNICAL SPECIFICATIONS	
Fixed height	65 cm
Length	200 cm
Width	70 cm
Max. working load	200 kg
Backrest tilt	10°
Main section	sliding by 12 cm
Adjustable feet	
Padding and upholstery fire-resistance rating	1IM
Padding: density/thickness	30 (kg/m3) / 4 cm
Weight	70 kg

BED FISIOTECH

The accessories on this page are all included in Adone and Dafne couches.
You can reorder them separately, too, and specify when appropriate the upholstery colour.

Code 1415408
WEDGE CUSHION
dimensions 45x45x15 cm

Code 1415601
TRAPEZOID CUSHION
dimensions 40x50x30 cm

Code 1415201
HALF-ROLL CUSHION
dimensions 30x16x8 cm

Code 1214010
SMALL THORACIC HARNESS
min/max width 60/100 cm

Code 1214020
LARGE THORACIC HARNESS
min/max width 70/130 cm

Code 1214030
SMALL PELVIC HARNESS
min/max width 60/100 cm

Code 1214040
LARGE PELVIC HARNESS
min/max width 70/130 cm

Code 1216021
HEAD HALTER

Code 1216023
SPREAD BAR

Code 1214035
SPREADER BAR

TILTING FISIOTECH

Model shown Code 1115A30H1NB2

Axillary supports

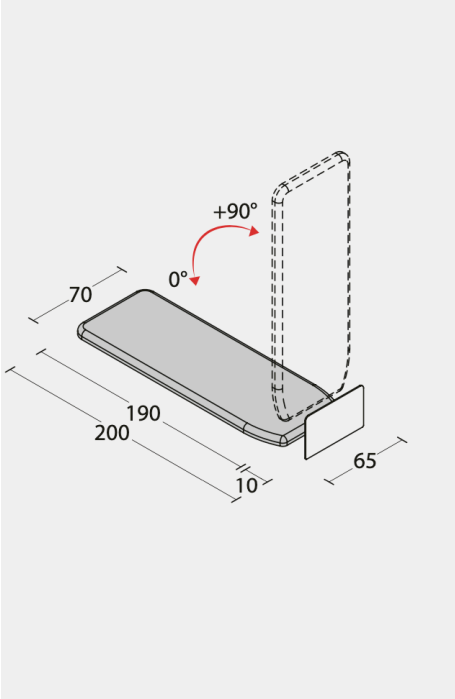

TECHNICAL SPECIFICATIONS	
Fixed height	50 cm
Upholstery dimensions	190 x 65 cm
Overall dimensions	200 x 70 cm
Max. working load	150 kg
Angle adjustment	electrical 0° +90°
Complete with emergency lever for actuator unlocking	∅ 12,5 cm
Complete with four swivel castors, of which two locking	
Complete with safety straps	3
Footboard	fixed
Padding and upholstery fire-resistance rating	1IM
Padding: density/thickness	30 (kg/m³) / 4 cm
Under bed clearance	15 cm
Weight	70 kg

ACCESSORIES	CODE
Axillary supports	1215030
Padded patient restraint	1215040
10 cm safety strap	1215050
Patient table	1215060

ACCESSORIES	CODE
Safety magnet	1215070
Safety double click	1215080
Swiss plug	1215090
UK 3-pin plug	1215091

TILTING FISIOTECH

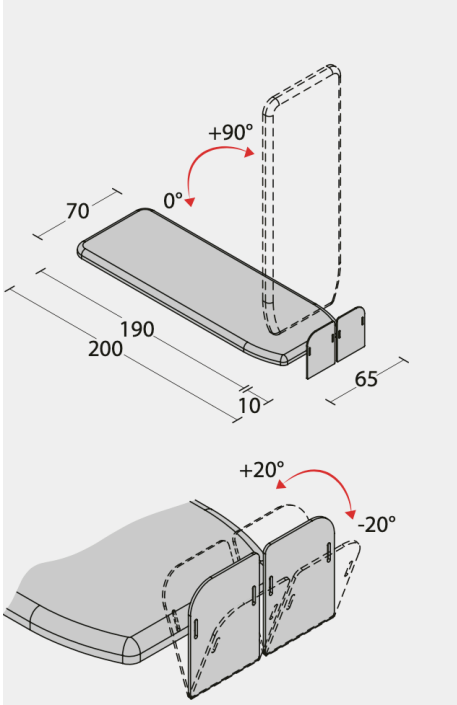

TECHNICAL SPECIFICATIONS	
Fixed height	50 cm
Upholstery dimensions	190 x 65 cm
Overall dimensions	200 x 70 cm
Max. working load	150 kg
Angle adjustment	electrical 0° +90°
Complete with emergency lever for actuator unlocking	
Complete with four swivel castors, of which two locking	∅ 12,5 cm
Complete with safety straps	3
Independent footboards adjustment	manual +20° -20°
Padding and upholstery fire-resistance rating	1IM
Padding: density/thickness	30 (kg/m³) / 4 cm
Under bed clearance	15 cm
Weight	70 kg

ACCESSORIES	CODE
Axillary supports	1215030
Padded patient restraint	1215040
10 cm safety strap	1215050
Patient table	1215060

ACCESSORIES	CODE
Safety magnet	1215070
Safety double click	1215080
Swiss plug	1215090
UK 3-pin plug	1215091

TILTING FISISOTECH

Model shown Code 1115C30H1SV1
+ Accessories Code 1215060

Patient table

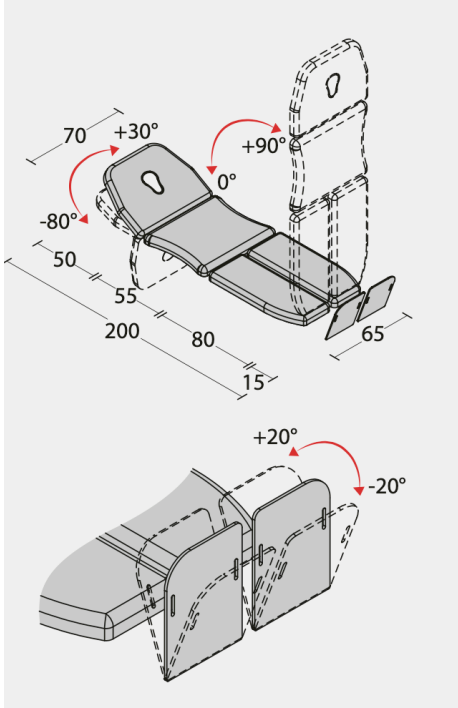

TECHNICAL SPECIFICATIONS	
Fixed height	50 cm
Upholstery dimensions	190 x 65 cm
Overall dimensions	200 x 70 cm
Max. working load	150 kg
Angle adjustment	electrical 0° +90°
Headrest adjustment	with gas spring +30° -80°
Complete with emergency lever for actuator unlocking Complete with four swivel castors, of which two locking	Ø 12,5 cm
Complete with safety straps	5
Complete with axillary supports	2
Independent footboards adjustment	manual +20° -20°
Breathing hole and bung	as standard
Padding and upholstery fire-resistance rating	1IM
Padding: density/thickness	30 (kg/m³) / 4 cm
Under bed clearance	70 kg
Weight	70 kg

ACCESSORIES	CODE
Padded patient restraint	1215040
10 cm safety strap	1215050
Patient table	1215060
Safety magnet	1215070

ACCESSORIES	CODE
Safety double click	1215080
Swiss plug	1215090
UK 3-pin plug	1215091

TILTING FISIOTECH

Model shown Code 1115D30H2SA1

Patient table

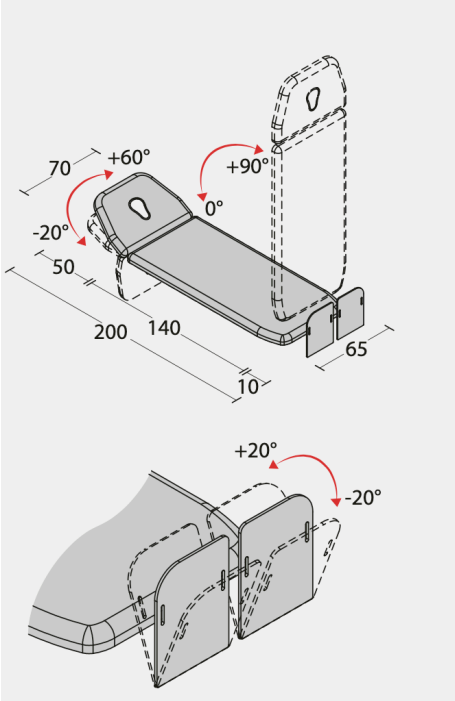

TECHNICAL SPECIFICATIONS	
Height adjustment	electrical 54-96 cm
Upholstery dimensions	190 x 65 cm
Overall dimensions	200 x 70 cm
Max. working load	150 kg
Angle adjustment	electrical 0° +90°
Headrest adjustment	with gas spring +60° -20°
Complete with emergency lever for actuator unlocking	
Complete with four swivel castors, of which two locking	∅ 10 cm
Complete with safety straps	3
Complete with patient table	
Independent footboards adjustment	manual +20° -20°
Breathing hole and bung	as standard
Padding and upholstery fire-resistance rating	1IM
Padding: density/thickness	30 (kg/m³) / 4 cm
Lateral offset	none
Under bed clearance	15 cm
Weight	70 kg

ACCESSORIES	CODE
Axillary supports	1215030
Padded patient restraint	1215040
10 cm safety strap	1215050
Safety double click	1215070

ACCESSORIES	CODE
Safety double click	1215080
Swiss plug	1215090
UK 3-pin plug	1215091

TILTING FISIOTECH

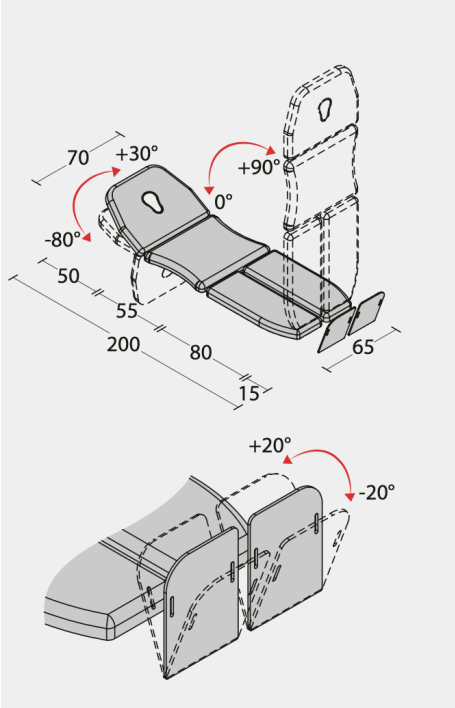

TECHNICAL SPECIFICATIONS	
Height adjustment	electrical 54-96 cm
Upholstery dimensions	190 x 65 cm
Overall dimensions	200 x 70 cm
Max. working load	150 kg
Angle adjustment	electrical 0°+90°
Headrest adjustment	with gas spring +30° -80°
Complete with emergency lever for actuator unlocking	
Complete with four swivel castors, of which two locking	∅ 10 cm
Complete with safety straps	5
Independent footboards adjustment	manual +20° -20°
Breathing hole and bung	as standard
Padding and upholstery fire-resistance rating	1IM
Padding: density/thickness	30 (kg/m³) / 4 cm
Lateral offset	none
Under bed clearance	15 cm
Weight	70 kg

ACCESSORIES	CODE
Axillary supports	1215030
Padded patient restraint	1215040
10 cm safety strap	1215050
Patient table	1215060

ACCESSORIES	CODE
Safety magnet	1215070
Safety double click	1215080
Swiss plug	1215090
UK 3-pin plug	1215091

POSTURAL FISIOTECH

Model shown Code 1117A39C1NB1 + Accessories Code 1218020

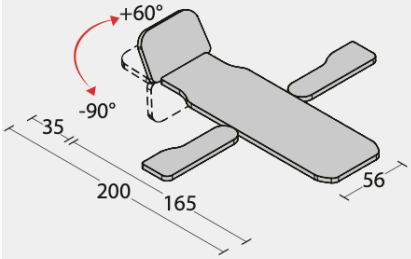

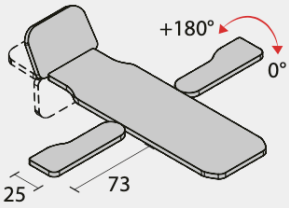

TECHNICAL SPECIFICATIONS	
Height adjustment	electrical or hydraulic 56-100 cm
Length	200 cm
Width	56 cm
Max. working load	200 kg
Sliding lateral armrests rotating by	180°
Footrest adjustment	with gas spring +60° -90°
Padding and upholstery fire-resistance rating	1IM
Padding: density/thickness	100 (kg/m³) / 1 cm
Lateral offset	none
Under bed clearance	12 cm
Weight	70 kg

ACCESSORIES	CODE
Height-adjustable pole + rope + ankle strap	1215010
Paper roll holder	1218010
Four castors	1218020
Double-ply paper roll	1210060

ACCESSORIES	CODE
Safety magnet	1217010
Safety double click	1217020
Swiss plug	1217030
UK 3-pin plug	1217031

POSTURAL FISIOTECH

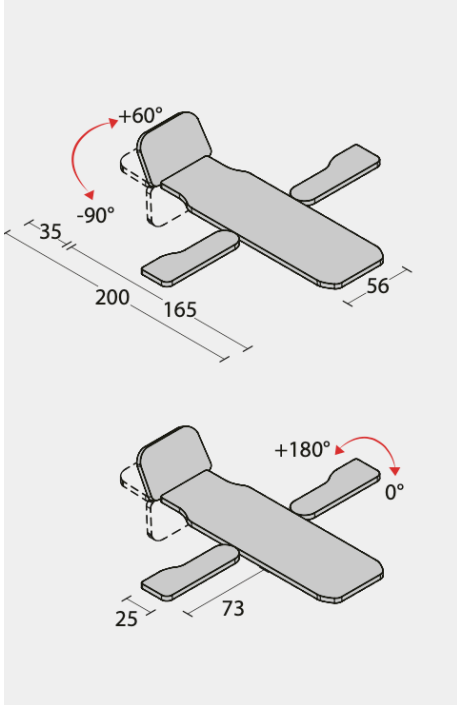

TECHNICAL SPECIFICATIONS	
Fixed height	74 cm
Length	200 cm
Width	56 cm
Max. working load	180 kg
Sliding lateral armrests rotating by	180°
Footrest adjustment	with gas spring +60° -90°
Padding and upholstery fire-resistance rating	1IM
Padding: density/thickness	100 (kg/m³) / 1 cm
Weight	60 kg

ACCESSORIES	CODE
Height-adjustable pole + rope + ankle strap	1215010
Paper roll holder	1218010

ACCESSORIES	CODE
Double-ply paper roll	1210060

POSTURAL FISIOTECH

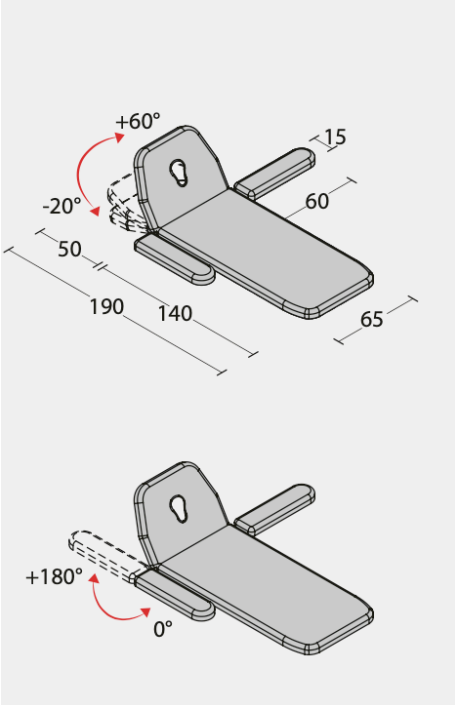

TECHNICAL SPECIFICATIONS	
Height adjustment	electrical or hydraulic 45-90 cm
Length	190 cm
Width	65 cm
Max. working load	200 kg
Headrest adjustment	with gas spring +60° -20°
Sliding lateral armrests rotating by	180°
Breathing hole and bung	as standard
Padding and upholstery fire-resistance rating	1IM
Padding: density/thickness	30 (kg/m³) / 4 cm
Lateral offset	17 cm
Weight	70 kg

ACCESSORIES	CODE
Height-adjustable pole + rope + ankle strap	1215010
Paper roll holder	1210010
Four castors	1211010
Double-ply paper roll	1210060

ACCESSORIES	CODE
Safety magnet	1217010
Safety double click	1217020
Swiss plug	1217030
UK 3-pin plug	1217031

POSTURAL FISIOTECH

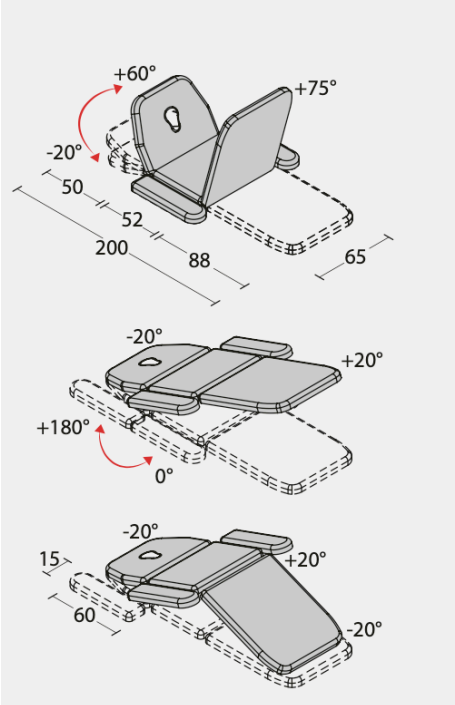

TECHNICAL SPECIFICATIONS	
Height adjustment	electrical or hydraulic 45-90 cm
Length	190 cm
Width	65 cm
Max. working load	200 kg
Headrest adjustment	with gas spring +60° -20°
Armrests adjustment	manual
Removable lateral armrests rotating by	180°
Middle section adjustment	with gas spring +20°
Footrest adjustment	with gas spring +75°
Trendelenburg position	+20°
Breathing hole and bung	as standard
Padding and upholstery fire-resistance rating	1IM
Padding: density/thickness	30 (kg/m³) / 4 cm
Lateral offset	17 cm
Weight	70 kg

ACCESSORIES	CODE
Paper roll holder	1210010
Four castors	1211010
Double-ply paper roll	1210060
Safety magnet	1217010

ACCESSORIES	CODE
Safety double click	1217020
Swiss plug	1217030
UK 3-pin plug	1217031

BED FISIOTECH

Model shown Code 1116A10S0SG1

Paper roll holder

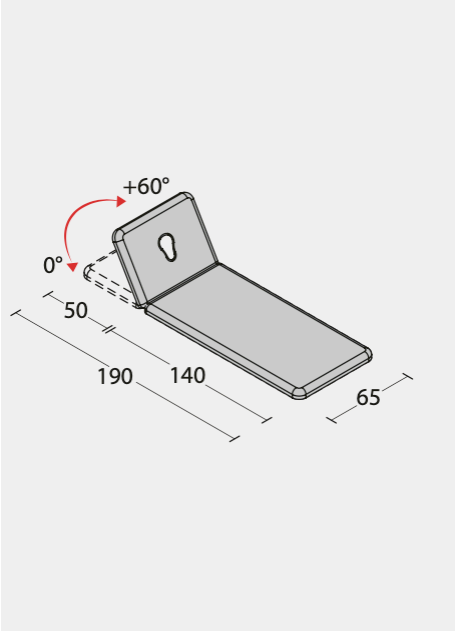

TECHNICAL SPECIFICATIONS	
Fixed height	78 cm
Length	190 cm
Width	65 cm
Max. working load	150 kg
Headrest adjustment	manual +60°
Breathing hole and bung	as standard
Padding and upholstery fire-resistance rating	1IM
Padding: density/thickness	30 (kg/m³) / 4 cm
Weight	50 kg

ACCESSORIES	CODE
Paper roll holder	1216010
Terry towel couch cover 65 cm	1210040

ACCESSORIES	CODE
Double-ply paper roll	1210060

BED FISIOTECH

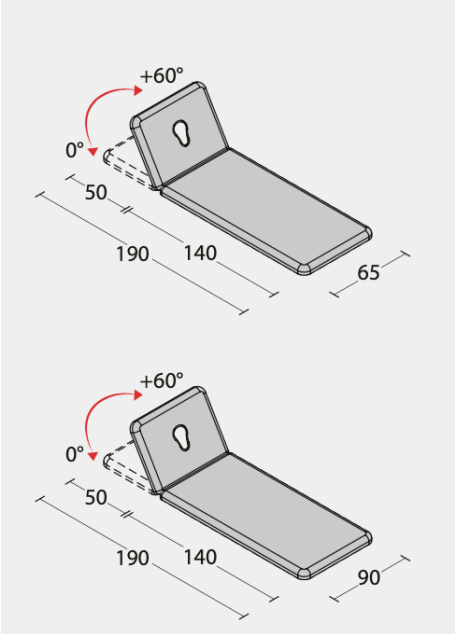

TECHNICAL SPECIFICATIONS	
Fixed height	50 - 78 cm
Length	190 cm
Width	65 / 90 cm
Max. working load	130 kg
Headrest adjustment	manual +60°
Breathing hole and bung	as standard
Padding and upholstery fire-resistance rating	1IM
Padding: density/thickness	30 (kg/m³) / 4 cm
Weight	50 kg

ACCESSORIES	CODE
Paper roll holder 65 cm	1216010
Paper roll holder 90 cm	1216020
Lower shelf 65 cm	1216040

ACCESSORIES	CODE
Lower shelf 90 cm	1216050
Terry towel couch cover 65 cm	1210040
Double-ply paper roll	1210060

BED FISIOTECH

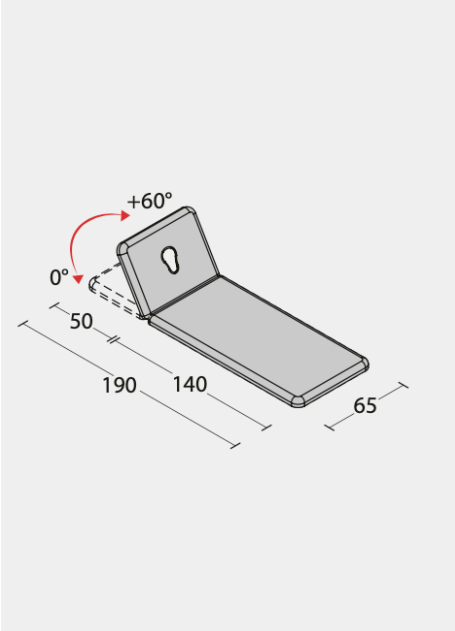

TECHNICAL SPECIFICATIONS	
Fixed height	78 cm
Length	190 cm
Width	65 cm
Max. working load	130 kg
Headrest adjustment	manual +60°
Tilting foldable legs	
Breathing hole and bung	as standard
Padding and upholstery fire-resistance rating	1IM
Padding: density/thickness	30 (kg/m³) / 4 cm
Weight	50 kg

ACCESSORIES	CODE
Paper roll holder	1216010
Terry towel couch cover 65 cm	1210040

ACCESSORIES	CODE
Double-ply paper roll	1210060

BED FISIOTECH

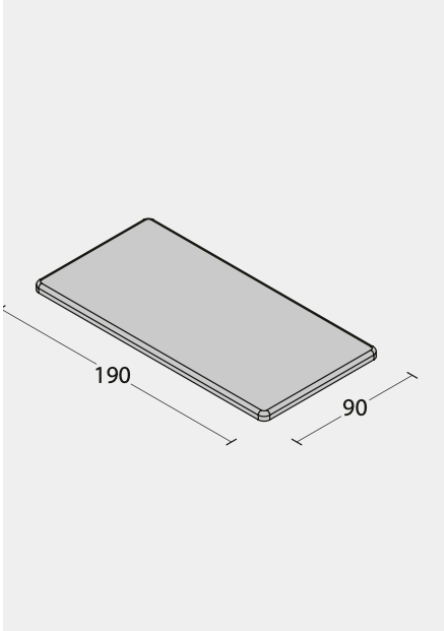

TECHNICAL SPECIFICATIONS	
Fixed height	50 - 78 cm
Length	190 cm
Width	90 cm
Max. working load	130 kg
Padding and upholstery fire-resistance rating	1IM
Padding: density/thickness	30 (kg/m³) / 4 cm
Weight	50 kg

ACCESSORIES	CODE
Paper roll holder	1216020
Lower shelf 90 cm	1216050

ACCESSORIES	CODE
Double-ply paper roll	1210060

BED FISIOTECH

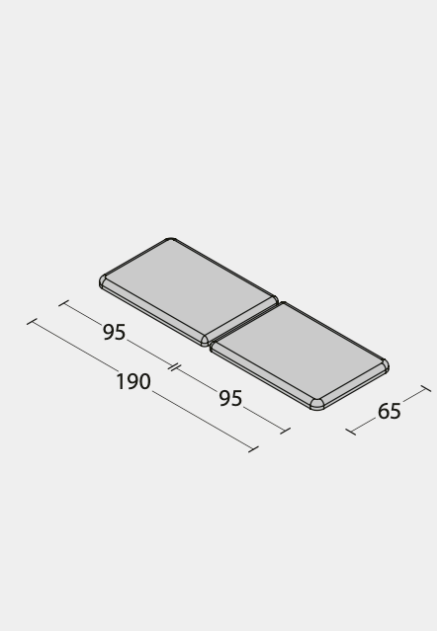

TECHNICAL SPECIFICATIONS	
Height	manual 60-75 cm
Length	218 cm
Width	65 cm
Dimensions closed	95 x 65 x 20 cm
Max. working load	150 kg
Headrest	removable
Armrest	removable
Padding and upholstery fire-resistance rating	1IM
Padding: density/thickness	30 (kg/m³) / 4 cm
Weight	17 kg

ACCESSORIES	CODE
HYDRA table carry case	1216070

BED FISIOTECH

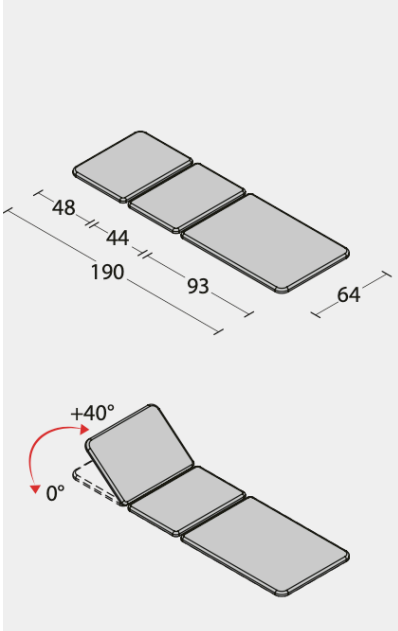

TECHNICAL SPECIFICATIONS	
Fixed height	72 cm
Length	187 cm
Width	64 cm
Dimensions closed	95 x 65 x 15 cm
Max. working load	95 kg
Headrest adjustment	manual +40°
Padding and upholstery fire-resistance rating	1IM
Padding: density/thickness	30 (kg/m³) / 2 cm
Weight	20 kg

ACCESSORIES	CODE
ANTERO table carry case	1216060

BED FISIOTECH

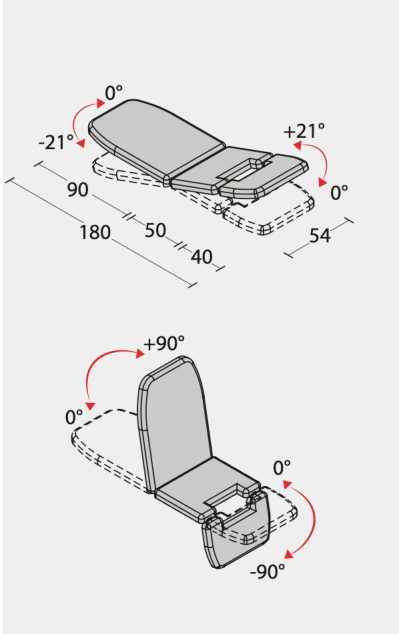

TECHNICAL SPECIFICATIONS	
Height adjustment	electrical 53-85 cm
Length	180 cm
Width	54 cm
Max. working load	180 kg
Backrest adjustment	electrical 0° +90°
Leg section adjustment	electrical 0° -90°
Trendelenburg position	0° +21°
Armrests	folding
Leg supports adjustment	manual in height and rotation
Four locking castors	∅ 10 cm
Stainless steel bowl	removable
Padding and upholstery fire-resistance rating	1IM
Padding: density/thickness	30 (kg/m³) / 6 cm
Weight	72 kg

ACCESSORIES	CODE
Paper roll holder	1219020
Removable padded headrest	1219030
Double-ply paper roll	1210060
Safety magnet	1219040

ACCESSORIES	CODE
Safety double click	1219050
Swiss plug	1219060
UK 3-pin plug	1219061

BED FISIOTECH

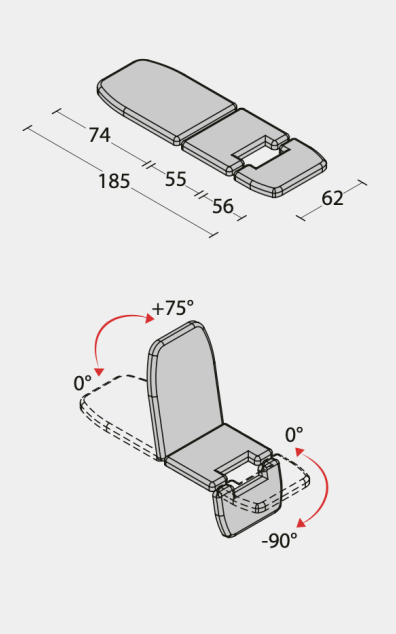

TECHNICAL SPECIFICATIONS	
Fixed height	76 cm
Length	185 cm
Width	62 cm
Max. working load	135 kg
Backrest adjustment	manual 0° +75°
Seat section	fixed
Footrest adjustment	manual 0° -90°
Leg supports adjustment	height and rotation
Stainless steel bowl	removable
Padding and upholstery fire-resistance rating	1IM
Padding: density/thickness	30 (kg/m³) / 5 cm
Weight	50 kg

ACCESSORIES	CODE
Paper roll holder	1219010

BED FISIOTECH

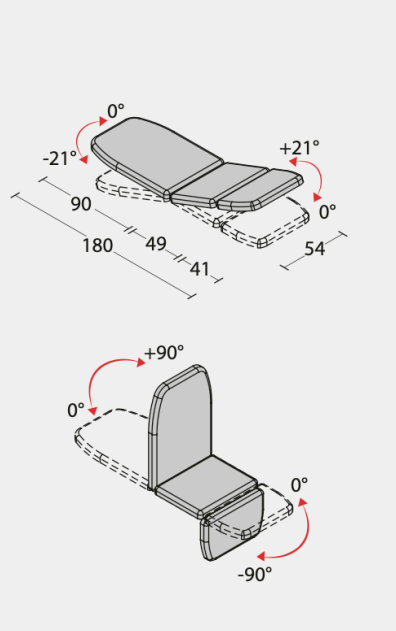

TECHNICAL SPECIFICATIONS	
Height adjustment	electrical 53-85 cm
Length	180 cm
Width	54 cm
Max. working load	180 kg
Backrest adjustment	electrical 0° +90°
Leg section adjustment	electrical 0° -90°
Trendelenburg position	0° +21°
Armrests	folding
Four locking castors	∅ 10 cm
Padding and upholstery fire-resistance rating	1IM
Padding: density/thickness	30 (kg/m³) / 6 cm
Weight	72 kg

ACCESSORIES	CODE
Paper roll holder	1219020
Removable headrest	1219030
Double-ply paper roll	1210060
Safety magnet	1220010

ACCESSORIES	CODE
Safety double click	1220020
Swiss plug	1220030
UK 3-pin plug	1220031

BED ACCESSORY FISIOTECH

FOOT PEDAL
Standard foot pedal for height adjustment.

ALL AROUND FOOT BAR SWITCH
The height of the couch is adjusted by simply swinging the bar placed all around the base of the couch.

ALUMINIUM ALL AROUND FOOT BAR SWITCH
The height of the couch is adjusted by simply pressing the bar placed all around the base of the couch.

HYDRAULIC CONTROL
The height of the couch is adjusted by simply pressing the hydraulic piston pedal.

PAPER ROLL HOLDER – Code 1218010
Metal structure to be placed under the final section of the couch.

CASTORS – Code 1218020
Four retractable castors to be used only to move the couch ∅ 7,5 cm.

SAFETY MAGNET – Code 1218030
Removing the magnet all electrical regulation functions are prevented.
This avoids any accidental activation of the actuators.
SAFETY DOUBLE CLICK WITH MAGNET – Code 1218040
A software that allows the movement of the actuators only through a double input of the control. This avoids any accidental activation of the actuators.
NOT AVAILABLE ON MOVEMENT WITH ALUMINIUM ALL-AROUND FOOT BAR SWITCH.

SWISS PLUG – Code 1218050 UK 3-PIN PLUG – Code 1215051

Code 1218050

Code 1218051

BED ACCESSORY FISIOTECH

FOOT PEDAL
Standard foot pedal for height adjustment.

ALL AROUND FOOT BAR SWITCH
The height of the couch is adjusted by simply swinging the bar placed all around the base of the couch.

HYDRAULIC CONTROL
The height of the couch is adjusted by simply pressing the hydraulic piston pedal.

PAPER ROLL HOLDER – Code 1210010
PAPER ROLL HOLDER – Code 1218010 For MONTELEONE couch. Metal structure to be placed under the final section of the couch.

CASTORS – Code 1211010
Four retractable castors to be used only to move the couch ∅ 6 cm.

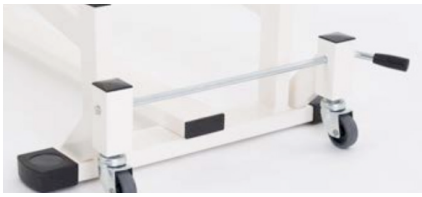

COLLAPSIBLE COT SIDES – Code 1210030
Cot sides ensuring the patient's safety while lying on the couch. Easy to use, with a simple manual mechanism.

SAFETY MAGNET – Code 1211020
Removing the magnet all electrical regulation functions are prevented. This avoids any accidental activation of the actuators.
SAFETY DOUBLE CLICK WITH MAGNET – Code 1211030
A software that allows the movement of the actuators only through a double input of the control. This avoids any accidental activation of the actuators.

SWISS PLUG – Code 1211040 UK 3-PIN PLUG – Code 1211041

Code 1211040

Code 1211041

BED ACCESSORY FISIOTECH

FOOT PEDAL
Standard foot pedal for height adjustment.

ALL AROUND FOOT BAR SWITCH
The height of the couch is adjusted by simply swinging the bar placed all around the base of the couch.

HYDRAULIC CONTROL
The height of the couch is adjusted by simply pressing the hydraulic piston pedal.

PAPER ROLL HOLDER – Code 1210010
Metal structure to be placed under the final section of the couch.

CASTORS – Code 1212010
Four retractable castors to be used only to move the couch ∅ 7,5 cm.

COLLAPSIBLE COT SIDES – Code 1210030
Cot sides ensuring the patient's safety while lying on the couch. Easy to use, with a simple manual mechanism.

SAFETY MAGNET – Code 1212020
Removing the magnet all electrical regulation functions are prevented. This avoids any accidental activation of the actuators.
SAFETY DOUBLE CLICK WITH MAGNET – Code 1212030
A software that allows the movement of the actuators only through a double input of the control. This avoids any accidental activation of the actuators.

SWISS PLUG – Code 1212040 UK 3-PIN PLUG – Code 1212041

Code 1212040

Code 1212041

BED ACCESSORY FISIOTECH

FOOT PEDAL
Standard foot pedal for height adjustment.
VARIATIONS

CASTORS BOBATH – Code 1213010
Four retractable castors to be used only to move the couch Ø 7,5 cm. For BOBATH S couches

CASTORS TITAN
Four retractable castors to be used only to move the couch Ø 7,5 cm. For TITAN couches Code 1213020
For TITAN 1L couches Code 1213021

COLLAPSIBLE COT SIDES – Code 1210030
Cot sides ensuring the patient's safety while lying on the couch. Easy to use, with a simple manual mechanism.

DOUBLE FOOT PEDAL – Code 1213030
The height of the couch is adjusted from both sides of the couch thanks to this accessory.

SAFETY MAGNET – Code 1213040
Removing the magnet all electrical regulation functions are prevented. This avoids any accidental activation of the actuators.
SAFETY DOUBLE CLICK WITH MAGNET – Code 1213050
A software that allows the movement of the actuators only through a double input of the control. This avoids any accidental activation of the actuators.

SWISS PLUG – Code 1213060 UK
3-PIN PLUG – Code 1213061

TILT BED ACCESSORY FISIOTECH

HAND CONTROL
Hand control for tilt adjustment and for height adjustment in height-adjustable tilt tables.

AXILLARY SUPPORTS - Code 1215030
The axillary supports can be adjusted in height, width and depth.

PATIENT TABLE - Code 1215060
The patient table can be used when the tilt table is in a supine static position. The patient table is designed so that the patient can lay its forearms on it.
Its height and depth can be manually adjusted.

PADDED PATIENT RESTRAINT - Code 1215040
Padded band designed to provide higher and more comfortable support to the patient.

SAFETY STRAP HEIGHT 10 cm - Code 1215050
Safety strap for an easy support of the patient. Height 10 cm.

SAFETY MAGNET - Code 1215070
Removing the magnet all electrical regulation functions are prevented. This avoids any accidental activation of the actuators.
SAFETY DOUBLE CLICK WITH MAGNET - Code 1215080
A software that allows the movement of the actuators only through a double input of the control. This avoids any accidental activation of the actuators.

SWISS PLUG - Code 1215090 UK
3-PIN PLUG - Code 1215091

Code 1215090

Code 1215091

POSTURAL ACCESSORY BED FISIOTECH

FOOT PEDAL
Standard foot pedal for height adjustment.

ALL AROUND FOOT BAR SWITCH
The height of the couch is adjusted by simply swinging the bar placed all around the base of the couch.

ALUMINIUM ALL AROUND FOOT BAR SWITCH
Available only on POSEIDONE couch.
The height of the couch is adjusted by simply pressing the bar placed all around the base of the couch.

HYDRAULIC CONTROL
The height of the couch is adjusted by simply pressing the hydraulic piston pedal.

ACCESSORY FISIOTECH

PAPER ROLL HOLDER – Code 1218010 For POSEIDONE couch. PAPER ROLL HOLDER – Code 1210010 For IRIS and NIKE couch. Metal structure to be placed under the final section of the couch.

CASTORS – Code 1218020 For POSEIDONE couch ∅ 7,5 cm.

CASTORS – Code 1211010 For IRIS and NIKE couch ∅ 6 cm. Four retractable castors to be used only to move the couch.

ADJUSTABLE POLE – Code 1215010
Removable pole, adjustable in height and equipped with rope and ankle strap. Not suitable for NIKE couch.

SAFETY MAGNET – Code 1217010
Removing the magnet all electrical regulation functions are prevented. This avoids any accidental activation of the actuators.
SAFETY DOUBLE CLICK WITH MAGNET – Code 1217020
A software that allows the movement of the actuators only through a double input of the control. This avoids any accidental activation of the actuators.

SWISS PLUG – Code 1217030 UK 3-PIN PLUG – Code 1217031

Code 1217030

Code 1217031

PAPER HOLD BED FISIOTECH

PAPER ROLL HOLDER - Code 1216010 For 65 cm wide fixed-height couches.

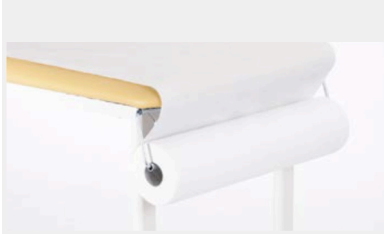

PAPER ROLL HOLDER - Code 1216020 For 90 cm wide fixed-height couches. Metal structure to be placed under the final section of the couch.

LOWER SHELF - Code 1216040 For 65 cm wide fixed-height couches. LOWER SHELF - Code 1216050 For 90 cm wide fixed-height couches. Support surface for couches .

ANTERO CARRY CASE - Code 1216060
ANTERO couch carry case.

HYDRA CARRY CASE - Code 1216070
HYDRA couch carry case.

GYN BED ACCESSORY FISIOTECH

HAND CONTROL
Hand control for sections and height adjustment.

PAPER ROLL HOLDER COUCH ESTIA – Code 1219010
Metal structure to be placed under the backrest of the couch.

PAPER ROLL HOLDER ERA ARMCHAIR – Code 1219020
Metal structure to be placed under the backrest of the couch.

HEADREST ERA ARMCHAIR – Cod. 1219030
Removable padded headrest to give the patient higher comfort.

SAFETY MAGNET – Code 1219040
Removing the magnet all electrical regulation functions are prevented. This avoids any accidental activation of the actuators.

SAFETY DOUBLE CLICK WITH MAGNET – Code 1219050
A software that allows the movement of the actuators only through a double input of the control. This avoids any accidental activation of the actuators.

SWISS PLUG – Code 1219060 UK 3-PIN PLUG – Code 1219061

BED ACCESSORY FISIOTECH

HAND CONTROL
Hand control for sections and height adjustment.

PAPER ROLL HOLDER DEMETRA ARMCHAIR – Code 1219020
Metal structure to be placed under the backrest of the couch.

HEADREST DEMETRA ARMCHAIR – Cod. 1219030
Removable padded headrest to give the patient higher comfort.

SAFETY MAGNET – Code 1220010
Removing the magnet all electrical regulation functions are prevented. This avoids any accidental activation of the actuators.

SAFETY DOUBLE CLICK WITH MAGNET – Code 1220020
A software that allows the movement of the actuators only through a double input of the control. This avoids any accidental activation of the actuators.

SWISS PLUG – Code 1220030
UK 3-PIN PLUG – Code 1220031

NEW BED FISIOTECH

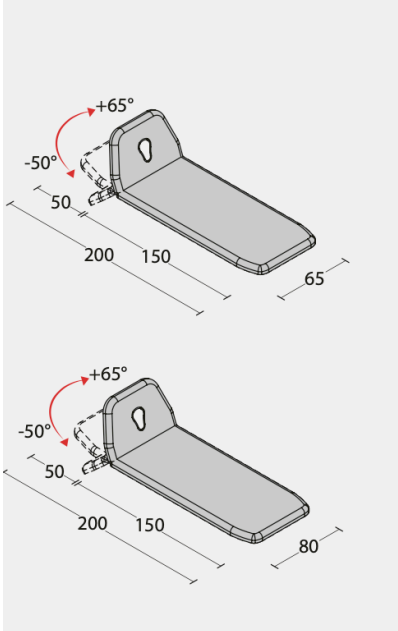

TECHNICAL SPECIFICATIONS	
Height adjustment	electrical or hydraulic 47-92 cm
Length	200 cm
Width	65 / 80 cm
Max. working load	200 kg
Headrest adjustment	with gas spring +65° -50°
Breathing hole and bung	as standard
Padding and upholstery fire-resistance rating	1IM
Padding: density/thickness	30 (kg/m³) / 4 cm
Lateral offset	24 cm
Under bed clearance (model with all round bar excluded)	12 cm
Weight	70 kg

ACCESSORIES	CODE
Paper roll holder	1210010
Four castors	1218020
Collapsible cotsides	1221070
Safety magnet	1221030

ACCESSORIES	CODE
Safety double click	1221040
Swiss plug	1221050
UK 3-pin plug	1221060
Double-ply paper roll	1210060

ZARYA BED

«Kinezo Expert» massage tables are ideal for various applications in medical and rehabilitation centres, spas, hospitals, massage rooms and beauty salons.
Table height can be easily adjusted with an electric drive. The frame height switch ensures smooth raising and lowering of the table on either side with an easy foot movement without distraction from the procedure.

- Regardless of the table configuration, the highest product quality and its characteristics remain unchanged: :
- LINAK electric drive for smooth height adjustment;
- STABILUS gas struts for setting the inclination angle of individual sections;
- frame switch for height adjustment on all sides;
- face hole in the upper section;
- wheels with a one-touch lift and lock option;
- adjustable legs to compensate for the uneven floor;
- wear-proof upholstery is made from certified materials.

In addition, you can order a lockable wheelbase.

✪ APPLICATIONS:

- massage,
- manual therapy,
- physiotherapy,
- kinesitherapy.

BED B ZARYA

«Kinezo Expert» tables are equipped with an electric drive and a 120 to 160 cm wide couch with a load capacity of up to 180 kg. Since different methods and operating conditions require purely individual parameters of kinesitherapy tables, we offer affordable basic equipment and a large number of additional options. Lockable wheels ensure safe and secure lock of the table for continuous operation. When necessary, it can be moved quickly and easily to the right place. The frame height switch ensures smooth one-touch table raising and lowering on both sides without distraction from the procedure.

THE STANDARD CONFIGURATION OF KINESITHERAPY TABLES INCLUDES:

- two different electric control devices: frame or remote control,
- gas struts to change the angle of the individual sections,
- adjustable legs to compensate for uneven floor.

In addition, you can order a lockable wheelbase.

✪ APPLICATIONS:

- Bobath and Vojta therapy,
- physiotherapy,
- kinesitherapy,
- manual therapy,
- massage.

PART BOBATH TABLE-FIZYOMED

✪ FEATURES

- Two pieces
- Adjustable height with electrical motor
- Hand Controller
- Head section has Manuel height adjustable.
- Optional, wheels can be installed on request

TEKNIK ÖZELLIKLER / TECHNICAL SPECIFICATION	
Güç Girişi / Power Supply	220-240 V 50/60 Hz
Motor / Motor	1
Boyu / Length	200 cm (± 10 cm)
Eni / Width	120 cm (± 10 cm)
Elektrikli Yükseklik / Adjustable Heigth	55 - 95 cm (± 10 cm)
Hasta Taşıma Kapasitesi / Patient Carriage Capacity	180 kg
Yaklaşık Ağırlığı / Approx. Weighth	25 kg
Sınıf Beyanı / Class Declaration	class I
Sertifikalar / Certificates	EN ISO 13485 : 2016 CE (Declaration Of Conformity)

TILTING TABLE ZARYA

«Kinezo Expert» verticalizing tables are used in rehab therapy for patients who cannot stand up without help. They are used to move the patient to an upright position, prepare him/her for standing and walking, and prevent negative consequences of a prolonged lying position. Our equipment is used for rehabilitation in intensive care units. Besides, it is suitable for home therapy.

✪ APPLICATIONS:

- stroke,
- spinal cord injuries,
- brain injuries,
- recovery after neurological surgery.

✪ STANDARD CONFIGURATION INCLUDES:

- electric drive for smooth table adjustment,
- gas struts for setting the inclination angle of the head section,
- adjustable foot supports with anti-slip coating,
- soft chest fixation,
- soft leg fixation,
- table.

The table can be equipped with a face hole in the head section upon the customer's request, in order to use it as a massage table or kinesitherapy table.

MULTIPLE BODY FUNCTIONAL TABLE HAOBRO

HB703	HB706	HB709
Three-fold three-segment	Four-fold six-segment	Four-fold nine-segment

✪ FEATURES

- Set different positions according to the functional characteristics of the treatment bed and the treatment needs;
- The height and angle of the bed surface can be adjusted as required, so that the therapist can perform manual massage and minimally invasive surgical treatment with acupotomy in different positions of the patient;
- High-quality electrodes, stable operation, in line with global electromechanical quality and safety standards (ISO. CE. and UL);
- The bed surface is made of environment-friendly, moisture-proof, anti-bacterial, and fireproof materials for medical use;
- It is equipped with an electric foot switch for electric lifting and a manual switch button for adjusting the angle;
- Electric control treatment position;
- There are breathing holes for patients;
- With unique foot-control bed body fixing and lifting device;
- High-quality materials, which are stable, firm, and durable

TILTING TABLE HAOBRO

HB700	HB701
Rising inclination angle: 0°~ 85°	Rising inclination angle: 0° ~ 85°
Pedal dorsiflexion: 0°~25°; Plantar flexion: 0°~30°	Height range of armrest board in upright posi-tion: 80~150cm
Pedal inversion: 0°~40°; valgus: 0°~30°	The vertical distance between the armrest board and the bed board is 0~20cm
Height range of armrest board in upright position: 80-150cm	Pedal dorsiflexion: 0°~25°; Plantar flexion: 0°-30°
Vertical lifting	Pedal inversion: 0"~40"; valgus: 0°~30°
Motor thrust: 3000N	Lifted height range of bed surface: 43~80cm
	Vertical lifting, horizontal lifting

✪ FEATURES

1. Can be used as an ordinary lifting treatment bed
2. Two motors can be controlled by a hand-held switch to adjust the inclination and height of the bed board respectively
3. Triple protection of motor and supporting gas spring on both sides
4. High-quality linear actuator, stable quality and low noise
5. The foot pedal can correct the patient's foot varus & valgus foot, and foot drop

PART TREATMENT AND EXAMINATION TABLE-FIZYOMED

✪ FEATURES

- 10 Part treatment and examination table.
- Electrical motor to adjust height
- Hand controller for easy operation
- An opening in the head section for patient comfort
- Head section of the unit can be adjusted between downwards 32° – and upwards 45°
- On requested the head rest opening can be closed.
- Adjustable feet section height
- All metal and steel parts have been painted with electrostatic paint to avoid rust.
- High density matress
- Easy clean winylex leather covering

TEKNIK ÖZELLIKLER / TECHNICAL SPECIFICATION	
Güç Girişi / Power Supply	220-240 V 50/60 Hz
Motor / Motor	2
Güç Tüketimi / Power Consumption	130 VA
Boyu / Length	200 cm (± 10 cm)
Eni / Width	70 cm (± 10 cm)
Elektrikli Yükseklik / Adjustable Heigth	63 - 102 cm (± 10 cm)
Hasta Taşıma Kapasitesi / Patient Carriage Capacity	210 kg
Yaklaşık Ağırlığı / Approx. Weigth	90 - 100 kg
Sınıf Beyanı / Class Declaration	class I
Sertifikalar / Certificates	EN ISO 13485 : 2016
	CE (Declaration Of Conformity)
	TPE Tescil no: 2012 03166

PART MECHANICAL TRACTION TABLE-FIZYOMED

✪ FEATURES

- 3 Part mechanical traction table
- Height adjustable with electrical motor
- Hand Controller for easy use
- Can be used in lumber or cervical
- Used as lumber, the patient gets the real traction power without slipping during the pulling process
- The traction pull is also possible when the patient is in a lying or sitting position on the table.
- Electrostatic metal and steel accessories
- High Density Matress

TEKNIK ÖZELLIKLER / TECHNICAL SPECIFICATION	
Güç Girişi / Power Supply	220-240 V 50/60 Hz
Motor / Motor	1
Güç tüketimi / Power Consumption	130 VA
Boyu (Cihazın Takıldığı Aparat Dahil) Length (Includes The Apparatus For The Device)	258 cm
Eni / Width	60 cm
Yükseklik / Heigth	50-95 cm
Hasta Taşıma Kapasitesi /Patient Carriage Capacity	210 kg
Yaklaşık ağırlığı / Approx. Weighth	60-70 kg
Sınıf Beyanı / Class Declaration	Class I
Sertifikalar / Certificates	EN ISO 13485 : 2016 CE (Declaration Of Conformity) TPE Tescil no: 2008 02293
Standart Aksesuarlar/ Standard Accesories	(1 Takım / 1 Set) Servikal ve Lomber Kose / Servical and Lumbar Corset (1 Adet / 1 pcs.) Servikal Korse Askı Demiri / Servical Corset Hanger (1 Adet / 1 pcs.) Fleksiyon Sehpası / Flexion Stand (1 çift / 1 pair) Koltukaltı Aparatı / Axilla Apparatus (1 adet/ 1 pcs.) Servikal Çekim Aparatı (L Aparat) Servical Traction Apparatus (L Apparatus) (2 adet / 2pcs.) Ayarlamalı Makara/ Adjustable Pulley

PART TREATMENT AND EXAMINATION TABLE-FIZYOMED

✪ FEATURES

- 9 Part treatment and examination table.
- Electrical motor to adjust height
- Hand controller for easy operation
- An opening in the head section for patient comfort
- Head section of the unit can be adjusted between downwards 32° – and upwards 45°
- On requested the head rest opening can be closed.
- Adjustable feet section height
- All metal and steel parts have been painted with electrostatic paint to avoid rust.
- High density matress
- Easy clean winylex leather covering

TEKNIK ÖZELLIKLER / TECHNICAL SPECIFICATION	
Güç Girişi / Power Supply	220-240 V 50/60 Hz
Motor / Motor	2
Güç Tüketimi / Power Consumption	130 VA
Boyu / Length	200 cm (± 10 cm)
Eni / Width	70 cm (± 10 cm)
Elektrikli Yükseklik / Adjustable Heigth	63-102 cm (± 10 cm)
Hasta Taşıma Kapasitesi / Patient Carriage Capacity	210 kg
Yaklaşık Ağırlığı / Approx. Weigth	90-100 kg
Sınıf Beyanı / Class Declaration	class I
Sertifikalar / Certificates	EN ISO 13485 : 2016
	CE (Declaration Of Conformity)
	TPE Tescil no: 2012 03166

PART TREATMENT AND EXAMINATION TABLE-FIZYOMED

✪ FEATURES

- 4 Part treatment and examination table.
- Electrical motor to adjust height
- Hand controller for easy operation
- An opening in the head section for patient comfort
- Head section of the unit can be adjusted between 0° – 45°
- On requested the head rest opening can be closed.
- The mid section height of the table can be adjusted between 0-25cm
- All metal and steel parts have been painted with electrostatic paint to avoid rust.
- High density matress
- Easy clean winylex leather covering

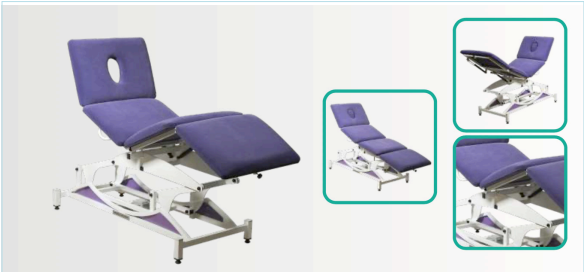

TEKNIK ÖZELLIKLER / TECHNICAL SPECIFICATION	
Güç Girişi / Power Supply	220-240 V 50/60 Hz
Motor / Motor	1
Güç Tüketimi / Power Consumption	130 VA
Boyu / Length	200 cm (± 10 cm)
Eni / Width	70 cm (± 10 cm)
Elektrikli Yükseklik / Adjustable Height	63 - 102 cm (± 10 cm)
Hasta Taşıma Kapasitesi / Patient Carriage Capacity	210 kg
Yaklaşık Ağırlığı / Approx. Weight	60-75 kg
Sınıf Beyanı / Class Declaration	class I
Sertifikalar / Certificates	EN ISO 13485 : 2016
	CE (Declaration Of Conformity)
	TPE Tescil no: 2012 03166

PART TREATMENT AND EXAMINATION TABLE-FIZYOMED

✪ FEATURES

- 6 Part treatment and examination table.
- Electrical motor to adjust height
- Hand controller for easy operation
- An opening in the head section for patient comfort
- Head section of the unit can be adjusted between downwards 32° – and upwards 45°
- On requested the head rest opening can be closed.
- Adjustable feet section height
- All metal and steel parts have been painted with electrostatic paint to avoid rust.
- High density matress
- Easy clean winylex leather covering

TEKNIK ÖZELLIKLER / TECHNICAL SPECIFICATION	
Güç Girişi / Power Supply	220-240 V 50/60 Hz
Motor / Motor	1
Güç Tüketimi / Power Consumption	130 VA
Boyu / Length	195 cm (± 10 cm)
Eni / Width	70 cm (± 10 cm)
Elektrikli Yükseklik / Adjustable Height	52 - 96 cm (± 10 cm)
Hasta Taşıma Kapasitesi / Patient Carriage Capacity	210 kg
Yaklaşık Ağırlığı / Approx. Weight	60-75 kg
Sınıf Beyanı / Class Declaration	class I
Sertifikalar / Certificates	EN ISO 13485 : 2016
	CE (Declaration Of Conformity)
	TPE Tescil no: 2012 03166

MULTI-PURPOSE TREATMENT TABLE-FIZYOMED

FEATURES

- Used Manipulation and Multi-Purpose to the Physiotherapy, table and chair
- Height adjustable with electrical motor assisted
- Hand controller for easy use
- An opening in the head section for patient comfort
- On requested the head rest opening can be closed Possibility act independently in all parts
- All metal and steel parts have been painted with electrostatic paint to avoid rust.
- 4 wheels the 2 lockable
- High densite matress
- Easy clean winylex leather covering

TEKNIK ÖZELLIKLER / TECHNICAL SPECIFICATION	
Güç Girişi / Power Supply	220-240 V 50/60 Hz
Motor / Motor	1
Boyu / Length	175 cm (± 10 cm)
Eni / Width	56 cm (± 10 cm)
Elektrikli Yükseklik / Adjustable Heigth	60-100 cm (± 10 cm)
Hasta Taşıma Kapasitesi / Patient Carriage Capacity	180 kg
Yaklaşık Ağırlığı / Approx. Weigth	25 kg
Sınıf Beyanı / Class Declaration	class I
Sertifikalar / Certificates	EN ISO 13485 : 2016
	CE (Declaration Of Conformity)

QUADRICIPES BENCH-FIZYOMED

Thanks to its anatomical design the FIZYOBENCH 1000 provides the muscles to work in the most convenient position so that the moving and working capacities are increased.
The chrome covered single parallel bar is regulated in variable sizes in order to determine the weights position and regulate the cylinders position. The disk allows the patient the desired movement in an axial. Therefore the patient cannot go beyond the set angle.
The back seat rest can be adjusted accordingly to the patient's height. By adjusting the seat it is possible for the patient to work the muscles group which is located back of the knees.
Optional: a second arm can be attached to the stretcher on request.

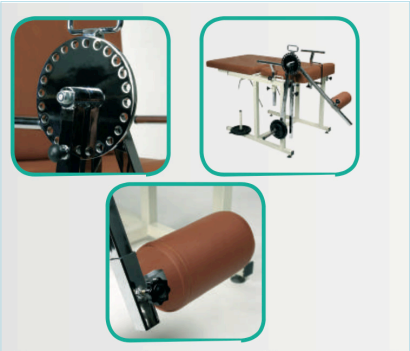

TEKNIK ÖZELLIKLER / TECHNICAL SPECIFICATION	
Boyu / Length	130 cm (± 10 cm)
Eni / Width	70 cm (± 10 cm)
Yükseklik / Heigth	75 cm (± 10 cm)
Hasta Taşıma Kapasitesi / Patient Carriage Capacity	210 kg
Yaklaşık Ağırlığı / Approx. Weighh	60 - 75 kg
Sınıf Beyanı / Class Declaration	class I
Sertifikalar / Certificates	EN ISO 13485 : 2016
	TPE Tescil no: 2008 02293
	CE (Declaration Of Conformity)

SINGLE PIECE BOBATH TABLE-FIZYOMED

✪ FEATURES

- Single piece
- Hand Controller
- Electrical height adjustment
- Optional, wheels can be installed on request

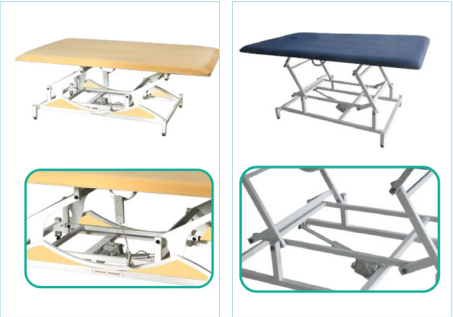

TEKNIK ÖZELLIKLER / TECHNICAL SPECIFICATION	
Güç Girişi / Power Supply	220-240 V 50/60 Hz
Motor / Motor	1
Boyu / Length	200 cm (± 10 cm)
Eni / Width	120 cm (± 10 cm)
Elektrikli Yükseklik / Adjustable Heigth	55 - 95 cm (± 10 cm)
Hasta Taşıma Kapasitesi / Patient Carriage Capacity	180 kg
Yaklaşık Ağırlığı / Approx. Weigth	25 kg
Sınıf Beyanı / Class Declaration	class I
Sertifikalar / Certificates	EN ISO 13485 : 2016
	CE (Declaration Of Conformity)

TILT TABLE-FIZYOMED

✪ FEATURES

- One piece
- Electrical motor, angle adjustment Hand controller
- Hand Controller for easy use
- Foot support
- Patient belts
- Electrostatic paint on all metal and steel parts
- High density matress
- Unit with angle indicator
- Easy clean, durable winylex leather
- Lockable wheels

TEKNIK ÖZELLIKLER / TECHNICAL SPECIFICATION	
Güç Girişi / Power Supply	220-240 V 50/60 Hz
Açısı / Angle	0-90°
Motor / Motor	1
Güç tüketimi / Power Consumption	130 VA
Boyu / Length	183 cm (± 10 cm)
Eni / Width	60 cm (± 10 cm)
Yükseklik / Heigth	76 cm (± 10 cm)
Hasta Taşıma Kapasitesi / Patient Carriage Capacity	210 kg
Yaklaşık Ağırlığı / Approx. Weight	50 kg
Sınıf Beyanı / Class Declaration	class I
Sertifikalar / Certificates	EN ISO 13485 : 2016
	CE (Declaration Of Conformity)
	TPE Tescil no: 2008 02293

TRACTION TABLE-FIZYOMED

✪ FEATURES

- 3 Part mechanical traction table
- Can be used in lumber or cervical
- Used as lumber, the patient gets the real traction powerwithout slipping during the pulling process
- The traction pull is also possible when the patient is in a lying or sitting position on the table.
- Electrostatic metal and steel accessories
- High Density Matress

TEKNIK ÖZELLIKLER / TECHNICAL SPECIFICATION	
Boyu (Cihaz Dahil) / Height (Includes Device)	258 cm
Eni /Width	60 cm
Yükseklik / Heigth	70 cm
Hasta Taşıma Kapasitesi /Patient Carriage Capacity	210 kg
Yaklaşık Ağırlığı / Approx. Weight	45-55 kg o
Sınıf Beyanı / Class Declaration	Class I
Sertifikalar / Certificates	EN ISO 13485 : 2016
	CE (Declaration Of Conformity)
	TPE Tescil no: 2012 03166
Standart Aksesuarlar/ Standard Accesories	(1 takım / 1 set) servikal ve lomber korse / servical and lumbar corset
	(1 adet / 1 pcs.) servikal korse askı demiri / servical corset hanger
	(1 adet / 1 pcs.) fleksiyon sehpası / flexion stand
	(1 çift / 1 pair) koltukaltı aparatı / axilla apparatus
	(1 adet / 1 pcs.) servikal çekim aparatı (L Aparat) / servical traction Apparatus (L Apparatus)
	(3 adet / 3pcs.) Ayarlamalı Makara/ Adjustable Pulley

TREATMENT AND EXAMINATION TABLE-FIZYOMED

✪ FEATURES

- Treatment and examination table made up of 2 parts.
- Head section of the unit can be adjusted between 0° – 45°
- An opening in the head section for patient comfort
- Paper towel apparatus
- High density matress
- All metal and steel parts have been painted with anti static paint to avoid rust.
- Vinylex leather matress for easy cleaning.

TEKNIK ÖZELLIKLER / TECHNICAL SPECIFICATION	
Boyu / Length	180 cm (± 10 cm)
Eni / Width	65 cm (± 10 cm)
Yükseklik / Heigth	75 cm (± 10 cm)
Hasta Taşıma Kapasitesi / Patient Carriage Capacity	210 kg
Yaklaşık Ağırlığı / Approx. Weight	30 kg
Sınıf Beyanı / Class Declaration	Class I
Sertifikalar / Certificates	EN ISO 13485 : 2016
	CE (Declaration Of Conformity)

PART TREATMENTA AND EXAMINATION TABLE-FIZYOMED

✪ FEATURES

- 2 Part treatment and examination table.
- Electrical motor to adjust height
- Hand controller for easy operation
- An opening in the head section for patient comfort
- Head section of the unit can be adjusted between 0° – 45°
- On requested the head rest opening can be closed.
- Adjustable feet section height
- All metal and steel parts have been painted with electrostatic paint to avoid rust.
- High density matress
- Easy clean vinylex leather covering
- Optional, wheels can be installed on request

TEKNIK ÖZELLIKLER / TECHNICAL SPECIFICATION	
Güç Girişi / Power Supply	220-240 V 50/60 Hz
Motor / Motor	1
Güç Tüketimi / Power Consumption	130 VA
Boyu / Length	190 cm (± 10 cm)
Eni / Width	70 cm (± 10 cm)
Elektrikli Yükseklik / Adjustable Height	52-96 cm (± 10 cm)
Hasta Taşıma Kapasitesi / Patient Carriage Capacity	210 kg
Yaklaşık Ağırlığı / Approx. Weight	60-75 kg
Sınıf Beyanı / Class Declaration	class I
Sertifikalar / Certificates	EN ISO 13485 : 2016 CE (Declaration Of Conformity) TPE Tescil no: 2012 03166

PART TREATMENT AND EXAMINATION TABLE-FIZYOMED

✪ FEATURES

- 3 Part treatment and examination table.
- Electrical motor to adjust height
- Hand controller for easy operation
- An opening in the head section for patient comfort
- Head section of the unit can be adjusted between 0º – 45º
- On requested the head rest opening can be closed.
- Adjustable feet section height
- All metal and steel parts have been painted with electrostatic paint to avoid rust.
- High density matress
- Easy clean winylex leather covering

TEKNIK ÖZELLIKLER / TECHNICAL SPECIFICATION	
Güç Girişi / Power Supply	220-240 V 50/60 Hz
Motor / Motor	1
Güç Tüketimi / Power Consumption	130 VA
Boyu / Length	200 cm (± 10 cm)
Eni / Width	70 cm (± 10 cm)
Elektrikli Yükseklik / Adjustable Heigth	52-96 cm (± 10 cm)
Hasta Taşıma Kapasitesi / Patient Carriage Capacity	210 kg
Yaklaşık Ağırlığı / Approx. Weighth	60-75 kg
Sınıf Beyanı / Class Declaration	class I
Sertifikalar / Certificates	EN ISO 13485 : 2016
	CE (Declaration Of Conformity)
	TPE Tescil no: 2012 03166

STANDING TABLE-FIZYOMED

✪ FEATURES

- The patient in an upright position to hold feature
- Laminate work desk
- Heel, the knee, the femur and hip support
- The patient connecting belt
- Lockable wheels
- Rust and against external factors and chrome plated metal parts
- Optional different sizes (adult and children) manufacturing facilities

TEKNIK ÖZELLIKLER / TECHNICAL SPECIFICATION	
Boyu / Length	80 cm
Eni / Width	63 cm
Yükseklik / Heigth	94 cm
Hasta Taşıma Kapasitesi / Patient Carriage Capacity	140 kg
Yaklaşık Ağırlığı / Approx. Weighth	30 kg
Sınıf Beyanı / Class Declaration	class I
Sertifikalar / Certificates	EN ISO 13485 : 2016
	CE (Declaration Of Conformity)

CHIROPRACTIC TREATMENT AND EXAMINATION TABLE-FIZYOMED

CHIROPRACTIC TREATMENT & EXAMINATION TABLE

- 6 part
- Electrical motor to adjust heigh
- Head section of the unit can be adjusted between downwards -300 and upwards +300
- All pieces elevate +150 up and their hardness degree can be adjusted
- Hand controller for easy operation
- All metal and steel parts have been painted with electrostatic paint to avoid rust
- High density matress
- Easy clean winylex leather covering

TEKNIK ÖZELLIKLER / TECHNICAL SPECIFICATION	
Güç Girişi / Power Supply	220-240 V 50/60 Hz
Motor / Motor	1
Boyu / Length	200 cm
Eni / Width	60 cm
Elektrikli Yükseklik / Adjustable Helgth	65-105 cm
Hasta Taşıma Kapasitesi / Patient Carriage Capacity	210 kg
Yaklaşık Ağırlığı / Approx. Welgth	105 kg
Sınıf Beyanı / Class Declaration	class I
Sertifikalar / Certificates	EN ISO 13485 : 2016
	CE (Declaration Of Conformity)

WOODEN TREATMENT AND EXAMINATION TABLE-FIZYOMED

✪ FEATURES

- Treatment and examination table made up of 2 parts.
- Head section of the unit can be adjusted between 0° – 35°
- Two drawers
- An opening in the head section for patient comfort
- Winylex leather matress for easy cleaning

TEKNIK ÖZELLIKLER / TECHNICAL SPECIFICATION	
Boyu / Length	185 cm (± 10 cm)
Eni / Width	70 cm (± 10 cm)
Yükseklik / Heigth	70 cm (± 10 cm)
Hasta Taşıma Kapasitesi / Patient Carriage Capacity	160 kg
Yaklaşık Ağırlığı / Approx. Weighth	45 kg
Sınıf Beyanı / Class Declaration	class I
Sertifikalar / Certificates	EN ISO 13485 : 2016
	CE (Declaration Of Conformity)

SECTION ELECTRIC CARDIOLOGY TABLE-CONFYCARE

A strong two section cardiology table with comfortable sewn edge upholstery, central lock castors, electric backrest & two special cardiac cut outs allowing increased patient access. With a sleek design, great features and foot switch as standard it is simple to operate straight from the box without any assembly required.

Technical data

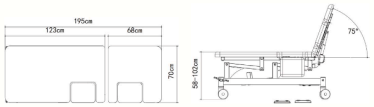

Cutout size	Angle of back section	Wheel	Product weight	Volume	Packing size
32cm x 25cm	0°~ +75°	ϕ125mm	62kgs	0.91m3	199x75x61cm
12.6'' x 9.8''	0°~ +75°	ϕ5''	136lbs	0.91m3	78.4''x29.5''x24''

✪ FEATURES

- Electric Hi-Lo operation and backrest operation by foot switch
- Electric backrest for effortless operation
- Dual cut outs for easy patient access
- Comfortable sewn edge upholstery
- Sleek design with rounded frame legs for safety
- 125mm/5'' central lock castors for safety and mobility
- Reliable TiMOTION motor
- Height range from 58-102cm/22.8''-40.2'' in approx 30 seconds
- Padding thickness 5cm/2''
- Foam Density: 36kg/m3(79.41lbs/m3)
- Warranty: 5 Years Construction, 3 Years Electrics
- Upholstery: PVC vinyl that is fire retardant and meet the requirement of BS 5852, stain, mildew, and wear resistance 150,000 times
- Qualification: ISO13485/ Passed MDR CE certification / Registered with the FDA in the United States
- Weight Capacity: 250kgs/551lbs

Product model

BASE | EL02C

LxWxH	195x70x(58-102)cm 76.8"x276"x22.8"-40.2"
Control mode	motor
Height adjustment	foot switch
Lifting speed	30s
Down speed	30s

Color of vinyl

SECTION ELECTRIC TREATMENT TABLE WITH ARMREST-CONFYCARE

Two section table with armrest
This table is designed with a multi-postion head section for more treatment and examination.This table addresses the requirements of a wide range of manual handling issues to benefit both patient and doctor.

Technical data

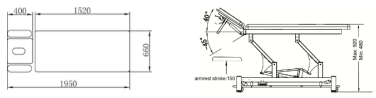

Angle of head section	Padding thickness	Wheel	Product weight	Volume	Packing size
-45°~ +40°	5cm	ϕ75mm	64kgs	0.72m3	199x70x51cm
-45°~ +40°	2''	ϕ3''	141lbs	0.72m3	78.4''x27.6''x20cm

✪ FEATURES

- Electric Hi-Lo operation by foot bar
- Sleek design with rounded frame legs for safety
- Comfortable head cushion with prone armrest
- Adjustable feet for uneven surfaces
- 75mm/3'' retractable castors for safety and mobility
- Reliable TiMOTION motor
- Height range from 48-92cm/19''-36'' in approx 30 seconds
- Padding thickness 5cm/2''
- Foam Density: 36kg/m3(79.41lbs/m3)
- Warranty: 5 Years Construction, 3 Years Electrics
- Upholstery: PVC vinyl that is fire retardant and meet the requirement of BS 5852, stain, mildew, and wear resistance 150,000 times
- Qualification: ISO13485/ Passed MDR CE certification / Registered with the FDA in the United States
- Weight Capacity: 250kgs/551lbs

Product model

BASE | EL022

LxWxH	195x66x(48-92)cm 76.8''x26''x19''-36''
Control mode	motor
Height adjustment	foot bar
Adjustable foot bar	360°
Lifting speed	30s
Down speed	30s

Color of vinyl

Sky blue L033
Charcoal grey L031
Navy blue L019
Black L003
Cement grey L032
White L006

SECTION ELECTRIC TREATMENT TABLE WITH GRIP ARMREST-CONFYCARE

Two section table with armrest
This table is designed with a multi-postion head section for more treatment and examination.This table addresses the requirements of a wide range of manual handling issues to benefit both patient and doctor.

Technical data

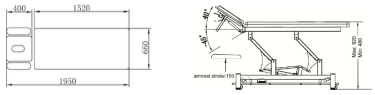

Angle of head section	Padding thickness	Wheel	Product weight	Volume	Packing size
-45°~ +40°	5cm	ϕ75mm	64kgs	0.72m3	199x70x51cm
-45°~ +40°	2''	ϕ3''	141lbs	0.72m3	78.4''x27.6''x20cm

✪ FEATURES

- Electric Hi-Lo operation by foot bar
- Sleek design with rounded frame legs for safety
- Comfortable head cushion with grip armrest
- Adjustable feet for uneven surfaces
- 75mm/3'' retractable castors for safety and mobility
- Reliable TiMOTION motor
- Height range from 48-92cm/19''-36'' in approx 30 seconds
- Padding thickness 5cm/2''
- Foam Density: 36kg/m3(79.41lbs/m3)
- Warranty: 5 Years Construction, 3 Years Electrics
- Upholstery: PVC vinyl that is fire retardant and meet the requirement of BS 5852, stain, mildew, and wear resistance 150,000 times
- Qualification: ISO13485/ Passed MDR CE certification / Registered with the FDA in the United States
- Weight Capacity: 250kgs/551lbs

Product model

BASE | EL022AR

LxWxH	195x66x(48-92)cm 76.8''x26''x19''-36''
Control mode	motor
Height adjustment	foot bar
Adjustable foot bar	360°
Lifting speed	30s
Down speed	30s

Color of vinyl

SECTION ELECTRIC TREATMENT TABLE-CONFYCARE

This strong two section table will withstand the rigours of patient treatment whether it is used in a demanding Physiotherapy clinic or a small GP practice you can rest assured it will perform. With a sleek design, great features and a foot bar as standard it is simple to operate straight from the box without any assembly required.

Technical data

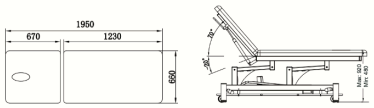

Angle of head section	Padding thickness	Wheel	Product weight	Volume	Packing size
-20°~ +70°	5cm	ϕ75mm	60kgs	0.75m3	199x74x51cm
-20°~ +70°	2''	ϕ3''	132.3lbs	0.75m3	78.4''x29''x20''

✪ FEATURES

- Electric Hi-Lo operation by foot bar
- Sleek design with rounded frame legs for safety
- Head section has face hole and plug
- Adjustable feet for uneven surfaces
- 75mm/3'' retractable castors for safety and mobility
- Reliable TiMOTION motor
- Height range from 48-92cm/19''-36'' in approx 30 seconds
- Padding thickness 5cm/2''
- Foam Density: 36kg/m3(79.41lbs/m3)
- Warranty: 5 Years Construction, 3 Years Electrics
- Upholstery: PVC vinyl that is fire retardant and meet the requirement of BS 5852, stain, mildew, and wear resistance 150,000 times
- Qualification: ISO13485/ Passed MDR CE certification / Registered with the FDA in the United States
- Weight Capacity: 250kgs/551lbs

Product model

BASE | EL02

LxWxH	195x66x(48-92)cm 76.8''x26''x19''-36''
Control mode	motor
Height adjustment	foot bar
Adjustable foot bar	360°
Lifting speed	30s
Down speed	30s

Color of vinyl

SECTION ARMRESTS ELECTRIC TREATMENT TABLE-CONFYCARE

Designed for clinical use in physical therapy and general medicine, it enables precise patient positioning while minimizing practitioner strain

Technical data

Padding thickness
·5cm / 2''

Foam density
·36kg/m³ / 2.25lbs/ft³

Castors
·ϕ75mm / ϕ3''

Product weight
·72kg / 159lbs

Packing size
·208x74x49cm / 81.9''x29.1''x19.3''

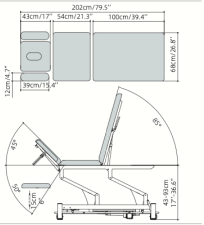

FEATURES

Key product features:

- **ADA-compliant low-height table, 43cm/17'' in height for accessibility**
- **Electric Hi-Lo operation controlled by foot bar**
- **Support therapeutic positioning of the neck, back, arms, and legs**
- **Closed base frame design for easy cleaning and maintenance**

- Overall Dimensions: Length 202cm/79.5'', Width 68cm/26.8'' Height Adjustment: From 43cm/17'' to 93cm/36.6''
- Head section: –50° to +45° by gas spring controlled
- Leg section: 0° to +85° by gas spring controlled
- Motor: Equipped with a premium-quality TIMOTION motor for smooth operation
- Breathing Hole: Welded and taped seams with plug included
- Upholstery Foam: 5cm/2'' thickness with a density of 36kg/m3 (2.25lbs/ft3)
- Vinyl: Fire-retardant PVC vinyl (BS 5852 compliant, 150,000 abrasion cycles)
- Castor System: One lever controls four retractable castors (Ø75mm/3'')
- Mains Supply: 100–240V AC, 50/60 Hz, Class II
- Weight Capacity: 250kg/551lbs, optional: 280kg/617lbs Warranty: 5 years
- Certifications: ISO13485, CE, UKCA, TGA, FDA approved

Product details

Fully closed metal base

360° adjustable foot bar

Height adjustable padded armrests

75mm/3'' silent castors

Product model PRO SERIES

Product Name
EL032PRO23

Control mode	**Motor**
Height adjustment	Foot bar
Adjustable foot bar	360°
Lifting/Down speed	30s
LxWxH	202x68x(43-93)cm 79.5''x26.8''x(17''-36.6'')

Product Name
EL032PRO29

Control mode	**Hydraulic**
Height adjustment	Foot pedal
Adjustable foot pedal	Both side of table
Lifting/Down speed	12s
LxWxH	202x68x(43-93)cm 79.5''x26.8''x(17''-36.6'')

Product Name
EL032PRO37

Control mode	**High-speed motor**
Height adjustment	Foot bar
Adjustable foot bar	360°
Lifting/Down speed	20s
LxWxH	202x68x(43-93)cm 79.5''x26.8''x(17''-36.6'')

SECTION ELECTRIC TREATMENT TABLE WITH ARMREST-CONFYCARE

A popular selection for physiotherapists.This table offers strong smooth electric hi-looperation through foot switch along with a generous range of motion for the head & backrest. This table will allow correct patient positioning while reducing practitioner strain.

Technical data

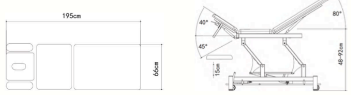

Angle of head section	Angle of leg section	Wheel	Product weight	Volume	Packing size
-45°~ +40°	0°~ +80°	ϕ75mm	65kgs	0.73m3	194x70x53cm
-45°~ +40°	0°~ +80°	ϕ3''	143.3lbs	0.73m3	76.4''x27.6''x20.9''

Product model

BASE | EL032

LxWxH	195x66x(48-92)cm 76.8''x26''x19''-36''
Control mode	motor
Height adjustment	foot bar
Adjustable foot bar	360°
Lifting speed	30s
Down speed	30s

FEATURES

- Electric Hi-Lo operation by foot bar
- Sleek design with rounded frame legs for safety
- Height adjustable padded armrests
- Head section has face hole and plug
- Height range from 48-92cm/19''-36'' in approx 30 seconds
- Adjustable feet for uneven surfaces
- 75mm/3'' retractable castors for safety and mobility
- Reliable TiMOTION motor
- Padding thickness 5cm/2''
- Foam Density: 36kg/m3(79.41bs/m3)
- Warranty: 5 Years Construction, 3 Years Electrics
- Upholstery: PVC vinyl that is fire retardant and meet the requirement of BS 5852, stain, mildew, and wear resistance 150,000 times
- Qualification: ISO13485/ Passed MDR CE certification / Registered with the FDA in the United States
- Weight Capacity: 250kgs/551lbs

Product details

SECTION ELECTRIC TREATMENT TABLE-CONFYCARE

Designed for clinical use in physical therapy and general medicine, it enables precise patient positioning while minimiz- ing practitioner strain.

Technical data

Padding thickness
-5cm / 2''

Foam density
-36kg/m³ / 2.25lbs/ft³

Castors
-ϕ75mm / ϕ3''

Product weight
-88kg / 194lbs

Packing size
-183x74/82x51cm / 72.1"x29.1"/32.3"x20.1"

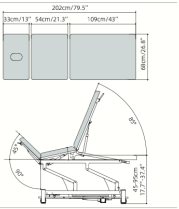

Fully closed metal base

360° adjustable foot bar

Postural drainage design

75mm/3'' silent castors

Product model PRO SERIES

Product Name
EL031PRO23

Control mode	**motor**
Height adjustment	foot bar
Adjustable foot bar	360°
Lifting/Down speed	30s
LxWxH	202x68/76x(45-95)cm 79.5"x26.8"/30"x(17.7"-37.4")

Product Name
EL031PRO37

Control mode	**high-speed motor**
Height adjustment	foot bar
Adjustable foot bar	360°
Lifting/Down speed	20s
LxWxH	202x68/76x(45-95)cm 79.5"x26.8"/30"x(17.7"-37.4")

✪ FEATURES

Key product features:

- **Electric Hi-Lo operation controlled by foot bar**
- **Electrically adjustable for postural drainage positioning at 25°**
- **Support the rapeutic positioning of the neck, back, and leg**
- **Closed base frame design for easy cleaning and maintenance**

- Overall Dimensions: Length 202cm/79.5'', Width 68cm/26.8'' optional 76cm/30'' Height Adjustment: From 45cm/17.7'' to 95cm/37.4''
- Head section: –90° to +45° / Leg section: 0° to +85° by gas spring controlled Trendelenburg (head-down): up to 25° by motor controlled
- Motors: Equipped with two premium-quality TIMOTION motors for smooth operation
- Breathing Hole: Welded and taped seams with plug included
- Upholstery Foam: 5cm/2'' thickness with a density of 36kg/m3 (2.25lbs/ft3)
- Vinyl: Fire-retardant PVC vinyl (BS 5852 compliant, 150,000 abrasion cycles)
- Castor System: One lever controls four retractable castors (∅75mm/3'') Mains Supply: 100–240V AC, 50/60 Hz, Class II
- Weight Capacity: 250kg/551lbs, optional: 280kg/617lbs
- Warranty: 5 years
- Certifications: ISO13485, CE, UKCA, TGA, FDA approved

SECTION EQUAL ALL ELECTRIC TREATMENT TABLE-CONFYCARE

This equal all electric treatment table provides a strong and versatile frame and upholstery. This table have very strong and versatile, suitable for a wide range of manual therapy techniques, Various medical procedures, osteopathy, massage and complimentary medicine.

Technical data

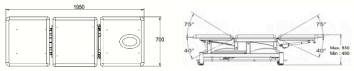

Angle of head section	Angle of leg section	padding thickness	Product weight	Volume	Packing size
-40°~ +75°	-40°~ +75°	5cm	71kgs	0.74m3	186x74x54cm
-40°~ +75°	-40°~ +75°	2''	154.3lbs	0.74m3	73.2''x29''x21.3''

Product model

BASE | EL03EM3

LxWxH	195x70x(49-93)cm 76.8"x27.6"x19.3"-36.6"
Control mode	motor
Height adjustment	foot switch
Lifting speed	30s
Down speed	30s

BASE | EL03EM3B

LxWxH	195x80x(53-93)cm 76.8"x31.5"x21.9"-36.6"
Load capacity	350kg
Castor	125mm

Medical-grade Castors-Optimized for Safe Patient Transfer.

✪ FEATURES

- Electric Hi-Lo operation by foot switch
- Sleek design with rounded frame legs for safety
- Head section has face hole and plug
- Height range from 49-93cm/19.3''-36.6'' in approx 30 seconds
- Adjustable feet for uneven surfaces
- 75mm/3'' retractable castors for safety and mobility
- 3 reliable TiMOTION motors
- Padding thickness 5cm/2''
- Foam Density: 36kg/m3(79.41lbs/m3)
- Warranty: 5 Years Construction, 3 Years Electrics
- Upholstery: PVC vinyl that is fire retardant and meet the requirement of BS 5852, stain, mildew, and wear resistance 150,000 times
- Qualification: ISO13485/ Passed MDR CE certification / Registered with the FDA in the United States
- Weight Capacity: 250kgs/551lbs

SECTION EQUAL ELECTRIC TREATMENT TABLE-CONFYCARE

This table is designed for a equal length for each section, suitable for a wide range of treatment and other therapy. It also provides easily adjustable height for head & back section by double gas struts.

Technical data

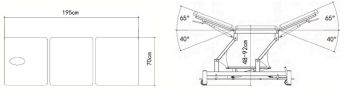

Angle of head section	Angle of leg section	Wheel	Product weight	Volume	Packing size
-40°~ +65°	-40°~ +65°	ϕ75mm	63kgs	0.74m3	186x74x54cm
-40°~ +65°	-40°~ +65°	ϕ3''	138.9lbs	0.74m3	73.2"x29"x21.3"

Product model

BASE | EL03EM

LxWxH	195x70x(48-92)cm 76.8"x27.6"x19"-36"
Control mode	motor
Height adjustment	foot bar
Adjustable foot bar	360°
Lifting speed	30s
Down speed	30s

✪ FEATURES

- Electric Hi-Lo operation by foot bar, electric back section operation by foot switch
- Sleek design with rounded frame legs for safety
- Head section has face hole and plug
- Height range from 48-92cm/19''-36'' in approx 30 seconds
- Adjustable feet for uneven surfaces
- 75mm/3'' retractable castors for safety and mobility
- 2 reliable TiMOTION motors
- Padding thickness 5cm/2''
- Foam Density: 36kg/m3(79.41lbs/m3)
- Warranty: 5 Years Construction, 3 Years Electrics
- Upholstery: PVC vinyl that is fire retardant and meet the requirement of BS 5852, stain, mildew, and wear resistance 150,000 times
- Qualification: ISO13485/ Passed MDR CE certification / Registered with the FDA in the United States
- Weight Capacity: 250kgs/551lbs

SECTION ELECTRIC TRACTION TABLE-CONFYACARE

This premium traction table is designed and built with finest materials and finishing quality through modern engineering techniques. Table is sturdy and meet all the criteria to optimize the patients' treatment. Traction table is generally for orthopaedic practitioners.

Technical data

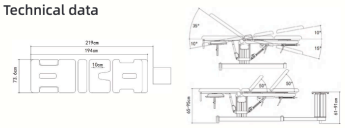

Height of platform	Angle of back section	Angle of lower limb	Angle of 3rd section	Angle of 4th section	Volume	Packing size
61-91cm	-10°~ +35°	-15°~ +10°	0°~ +50°	0°~ +50°	1.1m3	199x74x75cm
24''-35.8''	-10°~ +35°	-15°~ +10°	0°~ +50°	0°~ +50°	1.1m3	78.4''x29''x29.5''

Product model

BASE | ELT042

LxWxH	194x73,6x(65-95)cm 76.4''x29''x25.6''-37.4''
Control mode	motor
Height adjustment	handset
Lifting speed	23s
Down speed	23s

✪ FEATURES

- Electric Hi-Lo operation by handset
- Electric adjustable height, back section, leg section, Trendelenburg & Reverse Trendelenburg Accurate foot brake for safety
- Head section has face hole and plug
- Removable padded wing armrests
- Adjustable traction platform and rope angle
- Universal wheels for safety and mobility
- Reliable column motor
- Max traction of 10cm/4'' between the 2nd and 3rd section
- Height range from 65-95cm/25.6''-37.4'' in approx 30 seconds
- Padding thickness 5cm/2''
- Foam Density: 36kg/m3(79.41lbs/m3)
- Warranty: 5 Years Construction, 3 Years Electrics
- Upholstery: PVC vinyl that is fire retardant and meet the requirement of BS 5852, stain, mildew, and wear resistance 150,000 times
- Qualification: ISO13485/ Passed MDR CE certification / Registered with the FDA in the United States
- Weight Capacity: 250kgs/551lbs

SECTION ELECTRIC TRACTION TABLE-CONFYCARE

Designed for clinical use in physical therapy, it enables effective static and intermittent cervical and lumbar traction with a built-in flexion stool and adjustable mount.

Technical data

Padding thickness
·5cm / 2''

Foam density
·36kg/m³ / 2.25lbs/ft³

Castors
·ϕ75mm / ϕ3''

Product weight
·87kg / 192lbs

Packing size
·210x76x51cm / 82.7''x29.9''x20''

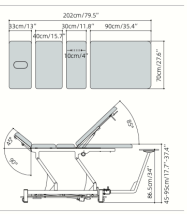

Fully closed metal base

360° adjustable foot bar

Head hole and plug

75mm/3'' silent castors

Product model PRO SERIES

Product Name
EL04PRO23

Control mode	**Motor**
Height adjustment	Foot bar
Adjustable foot bar	360°
Lifting/Down speed	30s
LxWxH	202x70x(45-95)cm 79.5''x27.6''x(17.7''-37.4'')

Product Name
EL04PRO37

Control mode	**High-speed motor**
Height adjustment	Foot bar
Adjustable foot bar	360°
Lifting/Down speed	20s
LxWxH	202x70x(45-95)cm 79.5''x27.6''x(17.7''-37.4'')

✪ FEATURES

Key product features:

- **4 section independently adjustable thigh and calf section for precise positioning**
- **Electric Hi-Lo operation controlled by foot bar**
- **Table with built-in flexion stool and belt**
- **Closed base frame design for easy cleaning and maintenance**

- Overall Dimensions: Length 202cm/79.5'', Width 70cm/27.6'' Height Adjustment: From 45cm/17.7'' to 95cm/37.4''
- Head section: –90° to +45° by gas spring controlled
- Leg section: 0° to +85° by gas spring controlled
- Motor: Equipped with a premium-quality TIMOTION motor for smooth operation Breathing Hole: Welded and taped seams with plug included
- Upholstery Foam: 5cm/2'' thickness with a density of 36kg/m3 (2.25lbs/ft3)
- Vinyl: Fire-retardant PVC vinyl (BS 5852 compliant, 150,000 abrasion cycles)
- Castor System: One lever controls four retractable castors (Ø75mm/3'')
- Mains Supply: 100–240V AC, 50/60 Hz, Class II
- Weight Capacity: 250kg/551lbs, optional: 280kg/617lbs Warranty: 5 years
- Certifications: ISO13485, CE, UKCA, TGA, FDA approved

SECTION ELECTRIC TREATMENT TABLE-CONFYCARE

Designed for clinical use in physical therapy and general medi- cine, providing precise 5-section adjustment to support patients' neck, back, and legs during treatment and examination.

Technical data

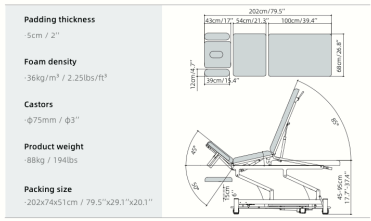

Product details

Fully closed metal base

Postural drainage design

Height adjustable padded armrests

75mm/3'' silent castors

Product model PRO SERIES

Product Name

EL05PRO23

Control mode	**Motor**
Height adjustment	Foot bar
Adjustable foot bar	360°
Lifting/Down speed	30s
LxWxH	202x68x(45-95)cm 79.5''x26.8''x(17.7''-37.4'')

Product Name

EL05PRO37

Control mode	**High-speed motor**
Height adjustment	Foot bar
Adjustable foot bar	360°
Lifting/Down speed	20s
LxWxH	202x68x(45-95)cm 79.5''x26.8''x(17.7''-37.4'')

✪ FEATURES

Key product features:

- **Electric Hi-Lo operation controlled by foot bar**
- **Electrically adjustable for postural drainage positioning at 25°**
- **Support the rapeutic positioning of the neck, back, and legs**
- **Closed base frame design for easy cleaning and maintenance**

- Overall Dimensions: Length 202cm/79.5'', Width 68cm/26.8''
- Height Adjustment: From 45cm/17.7'' to 95cm/37.4''
- Head section: –50° to +45° / Leg section: 0° to +85° by gas spring controlled Trendelenburg (head-down): up to 25° by motor controlled
- Motors: Equipped with two premium-quality TIMOTION motors for smooth operation
- Breathing Hole: Welded and taped seams with plug included
- Upholstery Foam: 5cm/2'' thickness with a density of 36kg/m3 (2.25lbs/ft3)
- Vinyl: Fire-retardant PVC vinyl (BS 5852 compliant, 150,000 abrasion cycles)
- Castor System: One lever controls four retractable castors (Ø75mm/3'')
- Mains Supply: 100–240V AC, 50/60 Hz, Class II
- Weight Capacity: 250kg/551lbs, optional: 280kg/617lbs
- Warranty: 5 years
- Certifications: ISO13485, CE, UKCA, TGA, FDA approved

SECTION MULTI-POSITION ELECTRIC TREATMENT TABLE-CONFYCARE

A popular selection for physiotherapists this five section table offers strong smooth electric hi-lo and postural drainage operation through foot switch along with a generous range of motion for the head & backrest.

Technical data

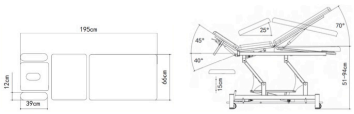

Angle of head section	Angle of chest section	Angle of leg section	Product weight	Volume	Packing size
-40°~ +45°	0°~ +25°	0°~ +70°	76kgs	0.81m3	195x70x58cm
-40°~ +45°	0°~ +25°	0°~ +70°	167.6lbs	0.81m3	76.8"x27.6"x22.8"

Product model

BASE | EL05

LxWxH	195x66x(51-94)cm 76.8"x26"x20"-37"
Control mode	motor
Height adjustment	foot bar
Adjustable foot bar	360°
Lifting speed	30s
Down speed	30s

Color of vinyl

✪ FEATURES

- Electric Hi-Lo operation by foot bar
- Electric postural drainage operation by foot switch
- Sleek design with rounded frame legs for safety
- Height adjustable padded armrests
- Head section has face hole and plug
- Adjustable feet for uneven surfaces
- 75mm/3'' retractable castors for safety and mobility
- Reliable TiMOTION motor
- Height range from 51-94cm/20''-37'' in approx 30 seconds
- Padding thickness 5cm/2''
- Foam Density: 36kg/m3(79.41lbs/m3)
- Warranty: 5 Years Construction, 3 Years Electrics
- Upholstery: PVC vinyl that is fire retardant and meet the requirement of BS 5852, stain, mildew, and wear resistance 150,000 times
- Qualification: ISO13485/ Passed MDR CE certification / Registered with the FDA in the United States
- Weight Capacity: 250kgs/551lbs

SECTION SPLIT-LEG ELECTRIC TREATMENT TABLE-CONFYCARE

Specially designed a split-leg at backrest for more strong function, provides amazing function and stability, with widest choice for user's requirements.

Technical data

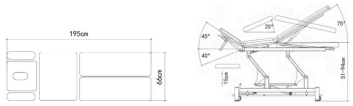

Angle of head section	Angle of chest section	Angle of leg section	Product weight	Volume	Packing size
-40°~ +45°	0°~ +25°	0°~ +75°	80kgs	0.81m3	195x70x58cm
-40°~ +45°	0°~ +25°	0°~ +75°	176.4lbs	0.81m3	76.8"x27.6"x22.8"

Product model

BASE | EL06

LxWxH	195x66x(51-94)cm 76.8"x26"x20"-37"
Control mode	motor
Height adjustment	foot bar
Adjustable foot bar	360°
Lifting speed	30s
Down speed	30s

Product details

FEATURES

- Electric Hi-Lo operation by foot bar
- Electric postural drainage operation by foot switch
- Sleek design with rounded frame legs for safety
- Height adjustable padded armrests
- Head section has face hole and plug
- Adjustable feet for uneven surfaces
- 75mm/3'' retractable castors for safety and mobility
- Reliable TiMOTION motor
- Height range from 51-94cm/20''-37'' in approx 30 seconds
- Padding thickness 5cm/2''
- Foam Density: 36kg/m3(79.41lbs/m3)
- Warranty: 5 Years Construction, 3 Years Electrics
- Upholstery: PVC vinyl that is fire retardant and meet the requirement of BS 5852, stain, mildew, and wear resistance 150,000 times
- Qualification: ISO13485/ Passed MDR CE certification / Registered with the FDA in the United States
- Weight Capacity: 250kgs/551lbs

SECTION ELECTRIC TREATMENT TABLE-CONFYCARE

Designed for clinical use in physical therapy and general medi- cine, providing precise 7-section adjustment to support patients' neck, back, arms, and legs during treatment and examination.

Technical data

Padding thickness
·5cm / 2''

Foam density
·36kg/m³ / 2.25lbs/ft³

Castors
·ϕ75mm / ϕ3''

Product weight
·88kg / 194lbs

Packing size
·202x76x51cm / 79.5''x29.9''x20.1''

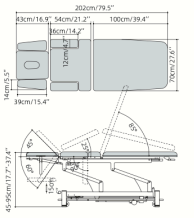

✪ FEATURES

Key product features:

- **Electric Hi-Lo operation controlled by foot bar**
- **Electrically adjustable for postural drainage positioning at 25°**
- **Support the rapeutic positioning of the neck, back, arms and legs**
- **Closed base frame design for easy cleaning and maintenance**

- Overall Dimensions: Length 202cm/79.5'', Width 70cm/27.6''
- Height Adjustment: From 45cm/17.7'' to 95cm/37.4''
- Head section: –90° to +45° / Leg section: 0° to +85° by gas spring controlled
- Trendelenburg (head-down): up to 25° by motor controlled
- Motors: Equipped with two premium-quality TIMOTION motors for smooth operation Breathing Hole: Welded and taped seams with plug included
- Upholstery Foam: 5cm/2'' thickness with a density of 36kg/m3 (2.25lbs/ft3)
- Vinyl: Fire-retardant PVC vinyl (BS 5852 compliant, 150,000 abrasion cycles)
- Castor System: One lever controls four retractable castors (Ø75mm/3'')
- Mains Supply: 100–240V AC, 50/60 Hz, Class II
- Weight Capacity: 250kg/551lbs, optional: 280kg/617lbs
- Warranty: 5 years
- Certifications: ISO13485, CE, UKCA, TGA, FDA approved

Product details

Fully closed metal base

Postural drainage design

Foldable padded wing armrests

75mm/3'' silent castors

Product model PRO SERIES

Product Name
EL052PRO23

Control mode	**Motor**
Height adjustment	Foot bar
Adjustable foot bar	360°
Lifting/Down speed	30s
LxWxH	202x70x(45-95)cm 79.5''x27.6''x(17.7''-37.4'')

Product Name
EL052PRO37

Control mode	**High-speed motor**
Height adjustment	Foot bar
Adjustable foot bar	360°
Lifting/Down speed	20s
LxWxH	202x70x(45-95)cm 79.5''x27.6''x(17.7''-37.4'')

SECTION MULTI-POSITION ELECTRIC TREATMENT TABLE-CONFYCARE

This table has a very strong table designed to withstand constant heavy use with minimal maintenance.It addresses the requirements of a wide range of manual handling issues to benefit both patient and doctor.

Technical data

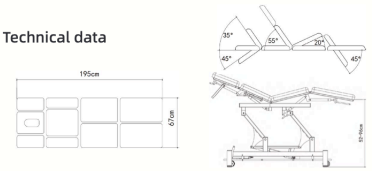

Angle of head section	Angle of back section	Angle of seat section	Angle of leg section	Product weight	Volume	Packing size
-45°~ +35°	0°~ +55°	0°~ +20°	0°~ -45°	85kgs	0.73m3	194x70x53cm
-45°~ +35°	0°~ +55°	0°~ +20°	0°~ -45°	187lbs	0.73m3	76.4"x27.6"x20.9"

Product model

BASE | EL10

LxWxH	195x67x(52-96)cm 76.8"x26.4"x20.5"-37.6"
Control mode	motor
Height adjustment	foot bar
Adjustable foot bar	360°
Lifting speed	30s
Down speed	30s

Product details

✪ FEATURES

- Electric Hi-Lo operation by foot bar
- Sleek design with rounded frame legs for safety
- Height adjustable padded armrests and folding side handrail
- Head section has face hole and plug
- Split-leg flexion leg plate
- Adjustable feet for uneven surfaces
- 75mm/3'' retractable castors for safety and mobility
- Reliable TiMOTION motor
- Height range from 52-96cm/20.5''-37.8'' in approx 30 seconds
- Padding thickness 5cm/2''
- Foam Density: 36kg/m3(79.41lbs/m3)
- Warranty: 5 Years Construction, 3 Years Electrics
- Upholstery: PVC vinyl that is fire retardant and meet the requirement of BS 5852, stain, mildew, and wear resistance 150,000 times
- Qualification: ISO13485/ Passed MDR CE certification / Registered with the FDA in the United States
- Weight Capacity: 250kgs/551lbs

ALUMINIUM PORTABLE MESSAGE-CONFYCARE

ALUMINUM PORTABLE MASSAGE TABLE

Product model

CFAL05F

LxWxH	185×66×(65-80)cm 72.8''x26''x(26''-31.5'')
Weight	18kg/40lbs
Frame material	Aluminum
Weight capacity	220kg/485lbs
Foam thickness	5cm/2''
Folded size	93×67×17cm 36.6''x26.4''x6.7''

PORTABLE MASSAGE CHAIR

CFMC03A

LxWxH	54×76×(120-127)cm 21.3''x29.9''x(47.2''-50'')
Weight	36kg/79lbs
Frame material	Aluminum
Weight capacity	180kg/397lbs
Foam thickness	5cm/2''
Folded size	54×29×118cm 21.3''x11.4''x46.5''

CONTOURED ELECTRIC TREATMENT TABLE-CONFYCARE

Designed for osteopathic manipulative treatment, the prone armrests and padded side armrests ensure patient comfort and relaxation during treatment.

Technical data

Padding thickness
·5cm / 2''

Foam density
·36kg/m³ / 2.25lbs/ft³

Castors
·ϕ75mm / ϕ3''

Product weight
·68kg / 150lbs

Packing size
·200x61x49cm / 78.7''x24''x19.3''

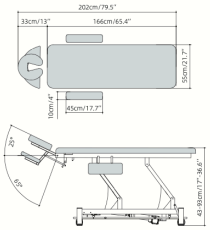

✪ FEATURES

Key product features:

- **ADA-compliant low-height table, 43cm/17'' in height for accessibility**
- **Electric Hi-Lo operation controlled by foot bar**
- **Padded, adjustable armrests (prone and side) for patient comfort and relaxation**
- **Closed base frame design for easy cleaning and maintenance**

- Overall Dimensions: Length 202cm/79.5'', Width 55cm/21.7''
- Height Adjustment: From 43cm/17'' to 93cm/36.6''
- Motor: Equipped with a premium-quality TIMOTION motor for smooth operation
- Breathing Hole: Welded and taped seams with plug included
- Upholstery Foam: 5cm/2'' thickness with a density of 36kg/m3 (2.25lbs/ft3)
- Vinyl: Fire-retardant PVC vinyl (BS 5852 compliant, 150,000 abrasion cycles)
- Castor System: One lever controls four retractable castors (Ø75mm/3'')
- Mains Supply: 100–240V AC, 50/60 Hz, Class II
- Weight Capacity: 250kg/551lbs, optional: 280kg/617lbs
- Warranty: 5 years
- Certifications: ISO13485, CE, UKCA, TGA, FDA approved

Fully closed metal base

Padded prone armrests

Padded side armrests

75mm/3'' silent castors

Product model PRO SERIES

Product Name
EL11ARPRO23

Control mode	**Motor**
Height adjustment	Foot bar
Adjustable foot bar	360°
Lifting/Down speed	30s
LxWxH	202x55x(43-93)cm 79.5''x21.7''x(17''-36.6'')

Product Name
EL11ARPRO29

Control mode	**Hydraulic**
Height adjustment	Foot pedal
Adjustable foot pedal	Both side of table
Lifting/Down speed	12s
LxWxH	202x55x(43-93)cm 79.5''x21.7''x(17''-36.6'')

Product Name
EL11ARPRO37

Control mode	**High-speed motor**
Height adjustment	Foot bar
Adjustable foot bar	360°
Lifting/Down speed	20s
LxWxH	202x55x(43-93)cm 79.5''x21.7''x(17''-36.6'')

ELECTRIC BLOOD CHAIR-CONFYACARE

Realization of people-oriented design and original products to meet the donor's sense of security and comfort of donors to alleviate the psychological pressure, blood the whole process easier and enjoyable.

Technical data

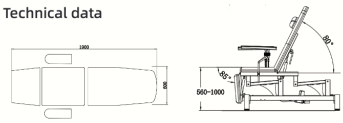

Angle of back section	Angle of leg section	Wheel	Product weight	Volume	Packing size
0°~ +80°	0°~ -85°	ϕ75mm	69kgs	0.77m3	164x74x64cm
0°~ +80°	0°~ -85°	ϕ3''	152lbs	0.77m3	64.6"x29"x25.2''

Product details

Product model

BASE | EL35B

LxWxH	190x60x(56-100)cm 74.8"x23.6"x22"-39.4"
Control mode	motor
Height adjustment	foot bar
Adjustable foot bar	360°
Lifting speed	30s
Down speed	30s

FEATURES

- Electric Hi-Lo operation by foot bar
- Sleek design with rounded frame legs for safety
- Comfortable flip up armrests
- Removable padded head section
- Adjustable feet for uneven surfaces
- 75mm/3'' retractable castors for safety and mobility
- Reliable TiMOTION motor
- Height range from 56-100cm/22''-39.4'' in approx 30 seconds
- Padding thickness 5cm/2''
- Foam Density: 36kg/m3(79.41lbs/m3)
- Warranty: 5 Years Construction, 3 Years Electrics
- Upholstery: PVC vinyl that is fire retardant and meet the requirement of BS 5852, stain, mildew, and wear resistance 150,000 times
- Qualification: ISO13485/ Passed MDR CE certification / Registered with the FDA in the United States
- Weight Capacity: 250kgs/551lbs

ELECTRIC CHANGING TABLE-CONFYCARE

This electric changing table is designed specifically for use within hospital and home care for changing disabled people.

Technical data

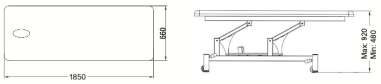

Padding thickness	Foam density	Wheel	Product weight	Volume	Packing size
5cm	36kg/m3	ϕ75mm	57kgs	0.66m3	190x71x51cm
2"	79.41lbs/m3	ϕ3"	126lbs	0.66m3	74.8"x 28"x 20"

Product model

BASE | EL01

LxWxH	185x66x(48-92)cm 72.8"x26"x(19"-36")
Control mode	motor
Height adjustment	foot bar
Adjustable foot bar	360°
Lifting speed	30s
Down speed	30s

✪ FEATURES

- Electric Hi-Lo operation by foot bar
- Sleek design with rounded frame legs for safety
- Padded side rails(optional design)
- Face hole and plug
- Adjustable feet for uneven surfaces
- 75mm/3'' retractable castors for safety and mobility
- Reliable TiMOTION motor
- Height range from 48-92cm/19''-36'' in approx 30 seconds
- Padding thickness 5cm/2''
- Foam Density: 36kg/m3(79.41lbs/m3)
- Warranty: 5 Years Construction, 3 Years Electrics
- Upholstery: PVC vinyl that is fire retardant and meet the requirement of BS 5852, stain, mildew, and wear resistance 150,000 times
- Qualification: ISO13485/ Passed MDR CE certification / Registered with the FDA in the United States
- Weight Capacity: 250kgs/551lbs

ELECTRIC BOBATH TABLE-CONFYACARE

Designed for rehabilitation. This strong two section neurological bobath table has been designed with the therapist in mind. The large table top provides plenty of space for patient and therapist and three nose holes and plugs provides flexibility of treatment.

Technical data

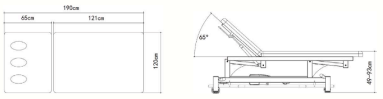

Angle of head section	Foam density	Wheel	Product weight	Packing size
0°~ +65°	36kg/m3	ϕ75mm	101kgs	195x125x53cm
0°~ +65°	79.4lbs/m3	ϕ3''	223lbs	76.8''x49''x21''

Product model

BASE | EL02W

LxWxH	190x120x49-93cm 74.8''x47''x19.3''-36.6''
Control mode	motor
Height adjustment	foot bar
Adjustable foot bar	360°
Lifting speed	30s
Down speed	30s

✪ FEATURES

- Electric Hi-Lo operation by foot bar, with adjustable head section angle from 0~ +65°
- Sleek design with rounded frame legs for safety
- Head section has three face holes and plugs
- Super wide table top 120cm/47.2"
- Adjustable feet for uneven surfaces
- 75mm/3"castors for safety and mobility
- Reliable TiMOTION motor
- Height range from 49-93cm/19.3-36.6" in approx 30 seconds
- Padding thickness 5cm/2"
- Foam Density: 36kg/m3 (79.4lbs/m3)
- Warranty: 5 Years Construction, 3 Years Electrics
- Upholstery: PVC vinyl that is fire retardant and meet the requirement of BS 5852, stain, mildew, and wear resistance 150,000 times
- Qualification: ISO13485/ Passed MDR CE certification / Registered with the FDA in the United States
- Weight Capacity: 250kgs/551lbs

ELECTRIC DAY SPAR TABLE-CONFYACARE

Specifically designed to cater for children of all ages through to young adults, these variable height child tilt tables feature dual leg fixation and a wide foot board with fixation facility for securing the feet.

Technical data

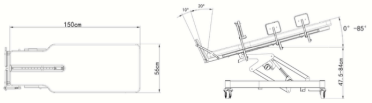

Angle of tilting	Angle of footrest	Wheel	Product weight	Volume	Packing size
0°~ +85°	-10°~ +20°	ϕ100mm	87kgs	0.69m3	162x82x51cm
0°~ +85°	-10°~ +20°	ϕ4''	191.8lbs	0.69m3	67.8''x32.3''x20''

Product model

BASE | EL12C

LxWxH	150x56x(47.5-84)cm 59''x22''x18.7''-33''
Control mode	motor
Height adjustment	handset
Lifting speed	30s
Down speed	30s

Product details

✪ FEATURES

- Electric Hi-Lo & tilt operation by handset
- Tilt angle inclinator included
- Activity tray & patient straps included
- Head, waist and knee fasteners included
- Crotch support for height adjustment
- Sleek design with rounded frame legs for safety 100mm/4'' retractable castors for safety and mobility
- Reliable TiMOTION motor
- Height range from 47.5-84cm/18.7''-33'' in approx 30 seconds
- Padding thickness 5cm/2''
- Foam Density: 36kg/m3(79.41lbs/m3)
- Upholstery: PVC vinyl that is fire retardant and meet the requirement of BS 5852, stain, mildew, and wear resistance 150,000 times
- Warranty: 5 Years Construction, 3 Years Electrics
- Qualification: ISO13485/ Passed MDR CE certification / Registered with the FDA in the United States
- Weight Capacity: 220kg/485lbs

ELECTRIC DAY SPAR TABLE-CONFYACARE

This electric Hi-Lo table is perfect for use in beauty, day spa and massage. It can be used in numerous comfortable positions with the head and leg section adjusted by gas struts. It has removable padded arm rests on each side that are also height adjustable. The wings next to the head piece are removable for patient comfort in massage allowing them to rest their arms on the prone arm rest.

Technical data

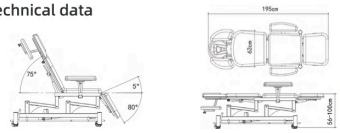

Angle of back section	Angle of leg section	Wheel	Product weight	Volume	Packing size
0°~ +75°	+5°~ -80°	ϕ75mm	70kgs	0.86m3	193x73x61cm
0°~ +75°	+5°~ -80°	ϕ3''	154.3lbs	0.86m3	76''x28.7''x24''

Product model

BASE | BT001

LxWxH	195x62x(56-100)cm 76.8''x24.4''x22''-39.4''
Control mode	motor
Height adjustment	foot bar
Adjustable foot bar	360°
Lifting speed	30s
Down speed	30s

✪ FEATURES

- Electric Hi-Lo operation by foot bar
- Luxurious soft and comfortable head cushion
- Sleek design with rounded frame legs for safety
- Removable padded wing armrests
- Padded prone armrest
- Adjustable feet for uneven surfaces
- 75mm/3'' retractable castors for safety and mobility
- Reliable TiMOTION motor
- Height range from 56-100cm/22''-39.4'' in approx 30 seconds
- Padding thickness 75mm/3''
- Foam Density: 36kg/m3
- Warranty: 5 Years Construction, 3 Years Electrics
- Upholstery: PVC vinyl that is fire retardant and meet the requirement of BS 5852, stain, mildew, and wear resistance 150,000 times
- Qualification: ISO13485/ Passed MDR CE certification / Registered with the FDA in the United States
- Weight Capacity: 250kgs/551lbs

ELECTRIC GYNAECOLOGY TABLE-CONFYACARE

Everything you will need for women's health and general examinations all in one table. This flexible table includes foot pads, stirrups, debris tray, a fill section & nose hole with plug allowing for a multitude of different examinations & treatments. It features a smooth hi-lo adjustment & electric seat tilt with foot switch for optimum manoeuvrability and better patient treatment.

Technical data

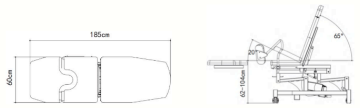

Angle of back section	Angle of seat section	Wheel	Product weight	Volume	Packing size
0°~ +65°	0°~ +20°	ϕ75mm	79kgs	0.75m3	149x73x69cm
0°~ +65°	0°~ +20°	ϕ3''	174lbs	0.75m3	58.7"x28.8"x27.2"

Product model

BASE | EL3603

LxWxH	185x60x(62-104)cm 76.8"x23.7"x24.4"-40.9"
Control mode	motor
Height adjustment	foot switch
Lifting speed	30s
Down speed	30s

Product details

✪ FEATURES

- Electric Hi-Lo operation and electric seat tilt operation by foot switch
- Sleek design with rounded frame legs for safety
- Foot pads & stirrups both included
- Debris tray & side rails included
- Fill section allowing general use
- Adjustable feet for uneven surfaces
- 75mm/3'' retractable castors for safety and mobility
- Reliable TiMOTION motor
- Height range from 62-104cm/24.4''-40.9'' in approx 30 seconds
- Padding thickness 5cm/2''
- Foam Density: 36kg/m3(79.41lbs/m3)
- Warranty: 5 Years Construction, 3 Years Electrics
- Upholstery: PVC vinyl that is fire retardant and meet the requirement of BS 5852, stain, mildew, and wear resistance 150,000 times
- Qualification: ISO13485/ Passed MDR CE certification / Registered with the FDA in the United States
- Weight Capacity: 250kgs/551lbs

ELECTRIC DYNAMIC TILT TABLE-CONFYCARE

Dynamic Tilt Table is available in a range of configurations to optimize patient care and outcomes, for functional rehabilitation of handicapped or disabled patients and in cardiac assessments.

Technical data

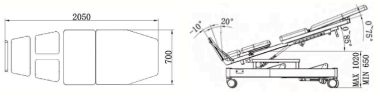

Angle of back section	Angle of tilting	Angle of footrest	Wheel	Product weight	Volume	Packing size
0°~ +75°	0°~ +85°	-10°~ +20°	ϕ125mm	162kgs	1.43m3	195x94x78cm
0°~ +75°	0°~ +85°	-10°~ +20°	ϕ5''	357.2lbs	1.43m3	76.8"x37"x30.7"

Product model

BASE | EL12M

LxWxH	205x70x(65-102)cm 80.7"x27.6"x25.6"-40.2"
Control mode	motor
Height adjustment	handset
Lifting speed	30s
Down speed	30s

Product details

FEATURES

- Electric Hi-Lo & tilt operation by handset
- Activity tray & patient straps included
- Removable upholstered traction stool & comfortable head cushion
- Optional support rod for software
- Sleek design with rounded frame legs for safety
- 125mm/5'' retractable castors for safety and mobility
- Reliable TiMOTION motor
- Height range from 65-102cm/25.6''-40.2'' in approx 30 seconds
- Padding thickness 7cm/3''
- Foam Density: 36kg/m3(79.41lbs/m3)
- Warranty: 5 Years Construction, 3 Years Electrics
- Upholstery: PVC vinyl that is fire retardant and meet the requirement of BS 5852, stain, mildew, and wear resistance 150,000 times
- Qualification: ISO13485/ Passed MDR CE certification / Registered with the FDA in the United States
- Weight Capacity: 220kgs/485lbs

ELECTRIC GYNAECOLOGY TABLE-CONFYCARE

Our premium gynaecology table provides for electric positioning of height & tilt through a foot switch ensuring practitioner comfort.
This table has been designed with an additional headrest section transforming to a full length table for most general examinations and minor treatments.

Technical data

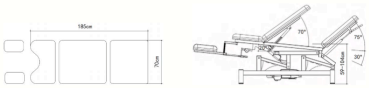

Angle of head section	Angle of back section	Angle of seat section	Product weight	Volume	Packing size
-30°~ +75°	0°~ +70°	0°~ +20°	88kgs	0.89m3	189x74x64cm
-30°~ +75°	0°~ +70°	0°~ +20°	194lbs	0.89m3	74.4"x29.1"x25.2"

Product details

Product model

BASE | EL3605

LxWxH	185x70x(59-104)cm 72.8"x27.5"x23.2"-40.9"
Control mode	motor
Height adjustment	foot switch
Adjustable foot bar	360°
Lifting speed	30s
Down speed	30s

✪ FEATURES

- Electric Hi-Lo & tilt operation by handset
- Tilt angle inclinator included
- Activity tray & patient straps included
- Head section has face hole and plug
- Sleek design with rounded frame legs for safety
- Ground brake for uneven surfaces 125mm/5" retractable castors for safety and mobility
- Reliable TiMOTION motor
- Height range from 57-104cm/22.4"-41"in approx 30 seconds
- Padding thickness 5cm/2"
- Foam density: 36kg/m3 (79.4lbs/m3)
- Upholstery: PVC vinyl that is fire retardant and meet the requirement of BS 5852, stain, mildew, and wear resistance 150,000 times
- Warranty: 5 Years Construction, 3 Years Electrics
- Qualification: ISO13485/ Passed MDR CE certification / Registered with the FDA in the United States
- Weight Capacity: 220kg/485lbs

GYNAECOLOGY TABLE -CONFYCARE.

Our tilt table offers a simple out of the box solution for physiotherapists and in home care patients alike. This two section tilt table including patient straps, activity tray and individually adjustable foot plates will suit the most demanding rehabilitation regime and perform for the long term.

Technical data

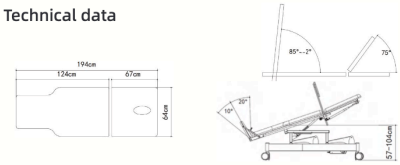

Angle of back section	Angle of tilting	Angle of footrest	Wheel	Product weight	Packing size
0°~ +75°	-2°~ +85°	-10°~ +20°	ϕ125mm	110kgs	208x90x64cm
0°~ +75°	-2°~ +85°	-10°~ +20°	ϕ5''	243lbs	82''x35.4''x25.2''

Product details

Product model

BASE | EL12

LxWxH	194x64x(57-104)cm 76.4''x25.2''x22.4''-41''
Control mode	motor
Height adjustment	handset
Lifting speed	30s
Down speed	30s

FEATURES

- Electric Hi-Lo & tilt operation by handset
- Tilt angle inclinator included
- Activity tray & patient straps included
- Head section has face hole and plug
- Sleek design with rounded frame legs for safety
- Ground brake for uneven surfaces 125mm/5" retractable castors for safety and mobility
- Reliable TiMOTION motor
- Height range from 57-104cm/22.4"-41"in approx 30 seconds
- Padding thickness 5cm/2"
- Foam density: 36kg/m3 (79.4lbs/m3)
- Upholstery: PVC vinyl that is fire retardant and meet the requirement of BS 5852, stain, mildew, and wear resistance 150,000 times
- Warranty: 5 Years Construction, 3 Years Electrics
- Qualification: ISO13485/ Passed MDR CE certification / Registered with the FDA in the United States
- Weight Capacity: 220kg/485lbs

ELECTRIC TREATMENT TABLE 3 SECTION-CONFYCARE

Designed for clinical use in physical therapy and general medicine, it enables precise patient positioning while minimizing practitioner strain.

Technical data

Padding thickness
·5cm / 2''

Foam density
·36kg/m³ / 2.25lbs/ft³

Castors
·ϕ75mm / ϕ3''

Product weight
·72kg / 159lbs

Packing size
·183x74x49cm / 72.1''x29.1''x19.3''

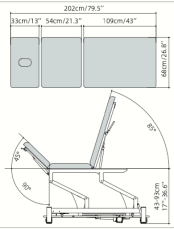

✪ FEATURES

Key product features:

- **ADA-compliant low-height table, 43cm/17'' in height for accessibility**
- **Electric Hi-Lo operation controlled by foot bar**
- **Head and leg section offer multi-angle adjustment, perfect for medical center use**
- **Closed base frame design for easy cleaning and maintenance**

- Overall Dimensions: Length 202cm/79.5'', Width 68cm/26.8''
- Height Adjustment: From 43cm/17'' to 93cm/36.6''
- Head section: –90° to +45° by gas spring controlled
- Leg section: 0° to +85° by gas spring controlled
- Motor: Equipped with a premium-quality TIMOTION motor for smooth operation
- Breathing Hole: Welded and taped seams with plug included
- Upholstery Foam: 5cm/2'' thickness with a density of 36kg/m3 (2.25lbs/ft3)
- Vinyl: Fire-retardant PVC vinyl (BS 5852 compliant, 150,000 abrasion cycles)
- Castor System: One lever controls four retractable castors (Ø75mm/3'')
- Mains Supply: 100–240V AC, 50/60 Hz, Class II
- Weight Capacity: 250kg/551lbs, optional: 280kg/617lbs Warranty: 5 years
- Certifications: ISO13485, CE, UKCA, TGA, FDA approved

Fully closed metal base

360° adjustable foot bar

Head hole and plug

75mm/3'' silent castors

Product model PRO SERIES

Product Name
EL03PRO23

Control mode	**Motor**
Height adjustment	Foot bar
Adjustable foot bar	360°
Lifting/Down speed	30s
LxWxH	202x68x(43-93)cm 79.5''x26.8''x(17''-36.6'')

Product Name
EL03PRO29

Control mode	**Hydraulic**
Height adjustment	Foot pedal
Adjustable foot pedal	Both side of table
Lifting/Down speed	12s
LxWxH	202x68x(43-93)cm 79.5''x26.8''x(17''-36.6'')

Product Name
EL03PRO37

Control mode	**High-speed motor**
Height adjustment	Foot bar
Adjustable foot bar	360°
Lifting/Down speed	20s
LxWxH	202x68x(43-93)cm 79.5''x26.8''x(17''-36.6'')

ELECTRIC PODIATRY CHAIR-CONFYCARE

A versatile podiatry and multipurpose treatment chair. This strong chair includes many features such as nose hole and plug,flip up armrests & a debris tray to suit the many disciplines of the healthcare and beauty industry.

Technical data

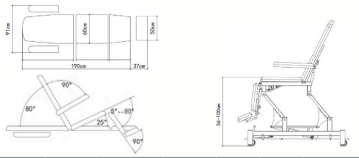

Angle of back section	Seat angle	Angle of leg section	Angle of foot section	Product weight	Volume	Packing size
0°~ +80°	0°~ +25°	-80°~ +5°	0°~ +90°	74kgs	0.76m3	184x68x60cm
0°~ +80°	0°~ +25°	-80°~ +5°	0°~ +90°	163lbs	0.76m3	72.4"x26.8"x23.6"

Product details

Product model

BASE | EL35

LxWxH	190x60x(56-100)cm 74.8''x23.6''x22''-39.4''
Control mode	motor
Height adjustment	foot switch
Lifting speed	30s
Down speed	30s

✪ FEATURES

- Electric Hi-Lo operation and seat tilt operation by foot switch
- Sleek design with rounded frame legs for safety
- Comfortable flip up armrests
- Padded adjustable foot section
- Head section has face hole and head section plug
- Debris tray included
- Adjustable feet for uneven surfaces
- 75mm/3'' retractable castors for safety and mobility
- Reliable TiMOTION motor
- Height range from 56cm to 100cm/22''-39.4'' in approx 30 seconds
- Padding thickness 5cm/2''
- Foam Density: 36kg/m3(79.41lbs/m3)
- Warranty: 5 Years Construction, 3 Years Electrics
- Upholstery: PVC vinyl that is fire retardant and meet the requirement of BS 5852, stain, mildew, and wear resistance 150,000 times
- Qualification: ISO13485/ Passed MDR CE certification / Registered with the FDA in the United States
- Weight Capacity: 250kgs/551lbs

ELECTRIC TREATMENT TABLE-CONFYCARE

This table features dual gas struts and smooth height adjustment—great value and a top choice for medical centers for years.

Technical data

Padding thickness
·5cm / 2''

Foam density
·36kg/m³ / 2.25lbs/ft³

Castors
·ϕ75mm / ϕ3''

Product weight
·71kg / 157lbs

Packing size
·204x61x49cm / 80.3''x24''x19.3''

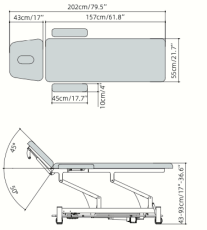

FEATURES

Key product features:

- **ADA-compliant low-height table, 43cm/17'' in height for accessibility**
- **Electric Hi-Lo operation controlled by foot bar**
- **Narrow 55cm/21.7'' wide cushion with side armrest**
- **Closed base frame design for easy cleaning and maintenance**

- Overall Dimensions: Length 202cm/79.5'', Width 55cm/21.7''
- Height Adjustment: From 43cm/17'' to 93cm/36.6''
- Head section: –50° to +45° by gas spring controlled
- Motor: Equipped with a premium-quality TIMOTION motor for smooth operation
- Breathing Hole: Welded and taped seams with plug included
- Upholstery Foam: 5cm/2'' thickness with a density of 36kg/m3 (2.25lbs/ft3)
- Vinyl: Fire-retardant PVC vinyl (BS 5852 compliant, 150,000 abrasion cycles)
- Castor System: One lever controls four retractable castors (Ø75mm/3'')
  Mains Supply: 100–240V AC, 50/60 Hz, Class II
- Weight Capacity: 250kg/551lbs, optional: 280kg/617lbs
- Warranty: 5 years
- Certifications: ISO13485, CE, UKCA, TGA, FDA approved

Fully closed metal base

360° adjustable foot bar

Padded side armrests

75mm/3'' silent castors

Product model PRO SERIES

Product Name
EL022ARPRO23

Control mode	**Motor**
Height adjustment	Foot bar
Adjustable foot bar	360°
Lifting/Down speed	30s
LxWxH	202x55x(43-93)cm 79.5"x21.7"x(17"-36.6")

Product Name
EL022ARPRO29

Control mode	**Hydraulic**
Height adjustment	Foot pedal
Adjustable foot pedal	Both side of table
Lifting/Down speed	12s
LxWxH	202x55x(43-93)cm 79.5"x21.7"x(17"-36.6")

Product Name
EL022ARPRO37

Control mode	**High-speed motor**
Height adjustment	Foot bar
Adjustable foot bar	360°
Lifting/Down speed	20s
LxWxH	202x55x(43-93)cm 79.5"x21.7"x(17"-36.6")

ELECTRIC MAT TABLE-CONFYCARE

This Hi-Lo Power Mat Therapy Table is a robust treatment table designed to make physical therapies and examinations safe and comfortable for patients of any size.

Technical data

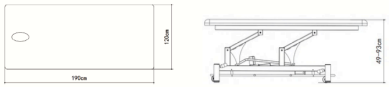

Padding thickness	Foam density	Wheel	Product weight	Packing size
5cm	36kg/m3	ϕ75mm	96kgs	195x125x53cm
2''	79.4lbs/m3	ϕ3''	212lbs	76.8''x49''x21''

Product model

BASE | EL01W

LxWxH	190x120x49-93cm 74.8''x47''x19.3''-36.6''
Control mode	motor
Height adjustment	foot bar
Adjustable foot bar	360°
Lifting speed	30s
Down speed	30s

✪ FEATURES

- Electric Hi-Lo operation by foot bar
- Sleek design with rounded frame legs for safety
- Head section has one face hole and plug
- Super wide table top 120cm/47.2"
- Adjustable feet for uneven surfaces
- 75mm/3"castors for safety and mobility
- Reliable TiMOTION motor
- Height range from 49-93cm/19.3-36.6" in approx 30 seconds
- Padding thickness 5cm/2"
- Foam Density: 36kg/m3 (79.4lbs/m3)
- Warranty: 5 Years Construction, 3 Years Electrics
- Upholstery: PVC vinyl that is fire retardant and meet the requirement of BS 5852, stain, mildew, and wear resistance 150,000 times
- Qualification: ISO13485/ Passed MDR CE certification / Registered with the FDA in the United States Weight Capacity: 250kgs/551lbs

ELECTRIC TILT TABLE-CONFYCARE

Electric Tilt Table mainly used in the nervous system out of control caused by weakness, pain, spasm of patients, auxiliary training to rehabilitation purposes.

Technical data

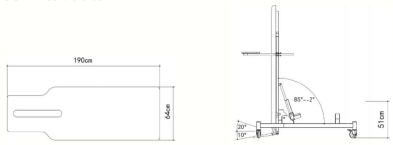

Angle of tilting	Angle of footrest	Wheel	Product weight	Volume	Packing size
-2°~ +85°	-10°~ +20°	ϕ125mm	87kgs	0.69m3	162x82x51cm
-2°~ +85°	-10°~ +20°	ϕ5''	191.8lbs	0.69m3	67.8''x32.3''x20''

FEATURES

- Electric tilt operation by handset
- Tilt angle inclinator included
- Activity tray & patient straps included
- Sleek design with rounded frame legs for safety
- 125mm/5'' retractable castors for safety and mobility
- Accessories: adjustable belts (3pcs), adjustable foot plate, adjustable active table
- Reliable TiMOTION motor
- Padding thickness 5cm/2''
- Foam Density: 36kg/m3(79.41lbs/m3)
- Upholstery: PVC vinyl that is fire retardant and meet the requirement of BS 5852, stain, mildew, and wear resistance 150,000 times
- Warranty: 5 Years Construction, 3 Years Electrics
- Qualification: ISO13485/ Passed MDR CE certification / Registered with the FDA in the United States
- Weight Capacity: 220kg/485lbs

Product model

BASE | EL12D

LxWxH	190x64x51cm 74.8''x25.2''x20.1''
Control mode	motor
Height adjustment	handset
Lifting speed	30s
Down speed	30s

EQUAL 3 SECTION ELECTRIC TREATMENT TABLE-CONFYCARE

This table features dual gas struts and smooth height adjustment—great value and a top choice for medical centers for years.

Technical data

Padding thickness
·5cm / 2''

Foam density
·36kg/m³ / 2.25lbs/ft³

Castors
·ϕ75mm / ϕ3''

Product weight
·71kg / 157lbs

Packing size
·208x76x49cm / 81.9''x29.9''x19.3''

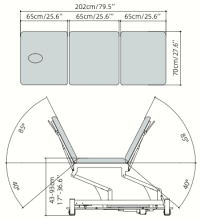

✪ FEATURES

Key product features:

- ADA-compliant low-height table, 43cm/17'' in height for accessibility
- Electric Hi-Lo operation controlled by foot bar
- Head and leg section offer multi-angle adjustment, perfect for medical center use
- Closed base frame design for easy cleaning and maintenance

- Overall Dimensions: Length 202cm/79.5'', Width 70cm/27.6''
- Height Adjustment: From 43cm/17'' to 93cm/36.6''
- Head/Leg section: –40° to +85° by gas spring controlled
- Motor: Equipped with a premium-quality TIMOTION motor for smooth operation Breathing Hole: Welded and taped seams with plug included
- Upholstery Foam: 5cm/2'' thickness with a density of 36kg/m3 (2.25lbs/ft3) Vinyl: Fire-retardant PVC vinyl (BS 5852 compliant, 150,000 abrasion cycles) Castor System: One lever controls four retractable castors (Ø75mm/3'') Mains Supply: 100–240V AC, 50/60 Hz, Class II
- Weight Capacity: 250kg/551lbs, optional: 280kg/617lbs Warranty: 5 years
- Certifications: ISO13485, CE, UKCA, TGA, FDA approved

Fully closed metal base

360° adjustable foot bar

Head hole and plug

75mm/3'' silent castors

Product model PRO SERIES

Product Name
EL03EPRO23

Control mode	**Motor**
Height adjustment	Foot bar
Adjustable foot bar	360°
Lifting/Down speed	30s
LxWxH	202x70x(43-93)cm 79.5''x27.6''x(17''-36.6'')

Product Name
EL03EPRO29

Control mode	**Hydraulic**
Height adjustment	Foot pedal
Adjustable foot pedal	Both side of table
Lifting/Down speed	12s
LxWxH	202x68x(43-93)cm 79.5''x27.6''x(17''-36.6'')

Product Name
EL03EPRO37

Control mode	**High-speed motor**
Height adjustment	Foot bar
Adjustable foot bar	360°
Lifting/Down speed	20s
LxWxH	202x68x(43-93)cm 79.5''x27.6''x(17''-36.6'')

FREE STANDING TREATMENT TABLE-CONFYCARE

FREE STANDING TREATMENT TABLE

Product model

FIX-MT1

LxWxH	185×70×70cm 72.8" x27.6" x27.6"
Weight	39kg/86lbs
Frame material	Steel with powder coated
Weight capacity	220kg/485lbs
Foam thickness	5cm/2"

FREE STANDING TREATMENT TABLE

FIX-MT2

LxWxH	195×70×70cm 76.8" x27.6" x27.6"
Weight	36kg/79lbs
Frame material	Steel with powder coated
Weight capacity	220kg/485lbs
Foam thickness	5cm/2"
Angle of backrest	0~ +75°

FIXED EXAMINATION TABLE

Product model

FIX-MT4

LxWxH	185×65×67cm 72.8"x26"x26.4"
Weight	30kg/66lbs
Frame material	Steel with powder coated
Weight capacity	220kg/485lbs
Foam thickness	5cm/2"

ALUMINUM PORTABLE MASSAGE TABLE

CFAL04F

LxWxH	185×70×(63-84)cm 76.8"x27.6"x(24.8"-33")
Weight	36kg/79lbs
Frame material	Aluminum
Weight capacity	220kg/485lbs
Foam thickness	5cm/2"
Folded size	93×71×22cm 36.6"x28"x8.7"

SPECIAL NEED CHANGE TABLE-CONFYACARE

Designed for use in schools and homes to assist with changing disabled individuals.

Technical data

Padding thickness
·5cm / 2''

Foam density
·36kg/m³ / 2.25lbs/ft³

Castors
·ϕ75mm / ϕ3''

Product weight
·68kg / 150lbs

Packing size
·190x74x49cm / 74.8''x29.1''x19.3''

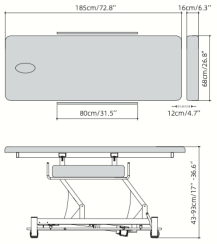

✪ FEATURES

Key product features:

- **ADA-compliant low-height table, 43cm/17'' in height for accessibility**
- **Electric Hi-Lo operation controlled by foot bar**
- **Removable padded side rails for added safety**
- **Closed base frame design for easy cleaning and maintenance**

- Overall Dimensions: Length 185cm/72.8'', Width 68cm/26.8''
- Height Adjustment: From 43cm/17'' to 93cm/36.6''
- Motor: Equipped with a premium-quality TIMOTION motor for smooth operation Breathing Hole: Welded and taped seams with plug included
- Upholstery Foam: 5cm/2'' thickness with a density of 36kg/m3 (2.25lbs/ft3) Vinyl: Fire-retardant PVC vinyl (BS 5852 compliant, 150,000 abrasion cycles) Castor System: One lever controls four retractable castors (Ø75mm/3'')
- Mains Supply: 100–240V AC, 50/60 Hz, Class II
- Weight Capacity: 250kg/551lbs, optional: 280kg/617lbs
- Warranty: 5 years
- Certifications: ISO13485, CE, UKCA, TGA, FDA approved
- Certifications: ISO13485, CE, UKCA, TGA, FDA approved

Fully closed metal base

Padded side rails

360° adjustable foot bar

75mm/3'' silent castors

Product model PRO SERIES

Product Name
EL01PRO23

Control mode	**Motor**
Height adjustment	Foot bar
Adjustable foot bar	360°
Lifting/Down speed	30s
LxWxH	(185-201)x68x(43-93)cm (72.8''-79.1'')x26.8''x(17''-36.6'')

Product Name
EL01PRO29

Control mode	**Hydraulic**
Height adjustment	Foot pedal
Adjustable foot pedal	Both side of table
Lifting/Down speed	12s
LxWxH	(185-201)x68x(43-93)cm (72.8''-79.1'')x26.8''x(17''-36.6'')

Product Name
EL01PRO37

Control mode	**High-speed motor**
Height adjustment	Foot bar
Adjustable foot bar	360°
Lifting/Down speed	20s
LxWxH	(185-201)x68x(43-93)cm (72.8''-79.1'')x26.8''x(17''-36.6'')

STAINLESS STEEL SINGLE STEP-CONFYCARE

STAINLESS STEEL SINGLE STEP

Product model

SST

LxWxH	40×27×20cm 15.8" x10.6" x7.9"
Frame material	Stainless steel frame ϕ1" steel tubing
Platform	MDF board + Non-slip ribbed rubber platform
Feet	Reinforced rubber tips
Weight capacity	150kg/330lbs
Weight	2.65kg/5.8lbs
Packing size	42×32×8cm 16.5" x12.6 "x3.2"

STAINLESS STEEL DOUBLE STEP

DST

LxWxH	40×57.5×47cm 15.8" x22.6" x18.5"
Frame material	Stainless steel frame ϕ1" steel tubing
Platform	MDF board + Non-slip ribbed rubber platform
Feet	Reinforced rubber tips
First step height	16cm/6.3"
Second step height	34cm/13.4"
Weight capacity	150kg/330lbs
Weight	5.2kg/11.5lbs
Packing size	61×49.5×13cm 24" x19.5" x5.1"

ELECTRIC OPHTHALMIC ENT OPERATING TABLE-CONFYCARE

This Ophthalmic Table can be used as pedicure chair, eye examination table and so on. It's a multifunctional physiotherapy chair and suitable for a wide range of treatment & other therapy.

Technical data

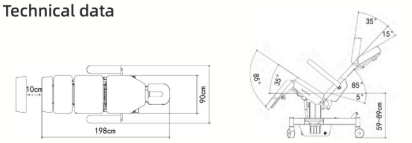

Angle of head section	Angle of back section	Angle of seat section	Angle of leg section	Product weight	Packing size
-15°~ +35°	-5°~ +85°	0°~ +35°	0°~ +85°	111kgs	162x74x67cm
-15°~ +35°	-5°~ +85°	0°~ +35°	0°~ +85°	245lbs	63.8"x29.1"x26.4"

FEATURES

- Electric Hi-Lo and angle operation by handset
- Luxurious soft and comfortable head section
- Contoured comfortable table top and flip up armrests
- Debris tray included
- Sleek design with rounded frame legs for safety
- Removable padded wing armrests
- 125mm/5'' castors for safety and mobility
- Reliable column motor
- Height range from 59-89cm/23.2''-38.6'' in approx 20 seconds
- Padding thickness 75mm/3''
- Foam Density: 36kg/m3(79.41lbs/m3)
- Warranty: 5 Years Construction, 3 Years Electrics
- Upholstery: PVC vinyl that is fire retardant and meet the requirement of BS 5852, stain, mildew, and wear resistance 150,000 times
- Qualification: ISO13485/ Passed MDR CE certification / Registered with the FDA in the United States
- Weight Capacity: 250kgs/551lbs

Product model

BASE | ELT35

LxWxH	198x60x(59-98)cm 78"x23.6"x23.2"-38.6"
Control mode	motor
Height adjustment	handset
Lifting speed	20s
Down speed	20s

ELECTRIC TREATMENT TABLE WITH ADJUSTABLE BACK SECTIO- CONFYCARE

This table features an adjustable back section, designed to enhance treatment and examination versatility.

Technical data

Padding thickness
·5cm / 2''

Foam density
·36kg/m³ / 2.25lbs/ft³

Castors
·ϕ75mm / ϕ3''

Product weight
·68kg / 150lbs

Packing size
·208x74x49cm / 81.9''x29.1''x19.3''

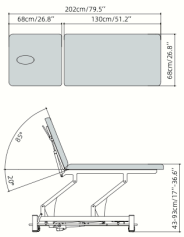

✪ FEATURES

Key product features:

- ADA-compliant low-height table, 43cm/17'' in height for accessibility
- Electric Hi-Lo operation controlled by foot bar
- Adjustable back section range from -20° to +85°
- Closed base frame design for easy cleaning and maintenance

- Overall Dimensions: Length 202cm/79.5'', Width 68cm/26.8''
- Height Adjustment: From 43cm/17'' to 93cm/36.6''
- Back section: –20° to +85° optional: 0° to +85° by gas spring controlled
- Motor: Equipped with a premium-quality TIMOTION motor for smooth operation
- Breathing Hole: Welded and taped seams with plug included
- Upholstery Foam: 5cm/2'' thickness with a density of 36kg/m3 (2.25lbs/ft3)
- Vinyl: Fire-retardant PVC vinyl (BS 5852 compliant, 150,000 abrasion cycles)
- Castor System: One lever controls four retractable castors (Ø75mm/3'')
- Mains Supply: 100–240V AC, 50/60 Hz, Class II
- Weight Capacity: 250kg/551lbs, optional: 280kg/617lbs
- Warranty: 5 years
- Certifications: ISO13485, CE, UKCA, TGA, FDA approved

Fully closed metal base

360° adjustable foot bar

Adjustable feet

75mm/3'' silent castors

Product model PRO SERIES

Product Name
EL02PRO23

Control mode	**Motor**
Height adjustment	Foot bar
Adjustable foot bar	360°
Lifting/Down speed	30s
LxWxH	202x68x(43-93)cm 79.5''x26.8''x(17''-36.6'')

Product Name
EL02PRO29

Control mode	**Hydraulic**
Height adjustment	Foot pedal
Adjustable foot pedal	Both side of table
Lifting/Down speed	12s
LxWxH	202x68x(43-93)cm 79.5''x26.8''x(17''-36.6'')

Product Name
EL02PRO37

Control mode	**High-speed motor**
Height adjustment	Foot bar
Adjustable foot bar	360°
Lifting/Down speed	20s
LxWxH	202x68x(43-93)cm 79.5''x26.8''x(17''-36.6'')

MULTI-USE IMAGING POWER TABLE WITH 3-SECTION TOP-CONFYCARE

This table is built for the ultrasound work environment. The table provides easier access for cardiac exams, GYN exams, upper extremity vascular exams and interventional procedures.

Technical data

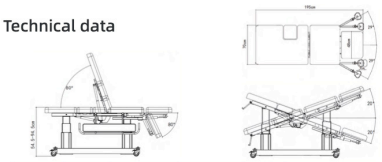

Angle of back section	Angle of leg section	Angle of Trendelenburg	Angle of reverse Trendelenburg	Product weight	Volume	Packing size
0°~ +80°	0°~ +80°	-20°~ 0°	0°~ +20°	110kgs	1m3	176x78x73cm
0°~ +80°	0°~ +80°	-20°~ 0°	0°~ +20°	242.5lbs	1m3	69.3"x30.7"x28.7"

FEATURES

- Electric Hi-lo operation by handset, easy to use
- Three-piece top with electric adjustable height, back section, leg section, Trendelenburg& Reverse Trendelenburg, pneumatic adjustable foot section
- Unobstructed base design. All-welded base and top frame
- Trendelenburg/Reverse Trendelenburg plus or minus 20°
- Reliable 2pcs cloumn motors.Dual column lift system adds rigidity
- 75mm/3'' heavy duty locking casters. Each caster has a brake system
- Reliable column motor
- Height range from 54-94cm/21.3''-37'' in approx 30 seconds
- Hi-lo without load in approx 16 seconds. Hi-lo with 250KGS/550LBS in 27s for higher and 15s for lower
- Option choice of safety rails/stirrups/paper roll holder/paper cutter/Safety Straps
- Warranty: 5 Years Construction, 3 Years Electrics
- Upholstery: PVC vinyl that is fire retardant and meet the requirement of BS 5852, stain, mildew, and wear resistance 150,000 times
- Qualification: ISO13485/ Passed MDR CE certification / Registered with the FDA in the United States
- Weight Capacity: 250kgs/551lbs

Product model

BASE | ELT300SD

LxWxH	195x70x(54-94)cm 76.8''x27.6''x21.3''-37''
Control mode	motor
Height adjustment	handset
Lifting speed	30s
Down speed	30s

MULTI-USE IMAGING POWER TABLE WITH 2 SECTION TOP

This table is built for the ultrasound work environment. The table provides easier access for cardiac exams, GYN exams, upper extremity vascular exams and interventional procedures.

Technical data

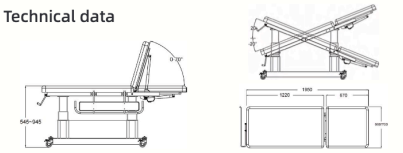

Angle of back section	Angle of Trendelenburg	Angle of reverse Trendelenburg	Product weight	Volume	Packing size
0°~ +80°	-20°~ 0°	0°~ +20°	110kgs	1m3	176x78x73cm
0°~ +80°	-20°~ 0°	0°~ +20°	242.5lbs	1m3	69.3"x30.7"x28.7"

✪ FEATURES

- Electric Hi-lo operation by handset, easy to use
- Two-piece top with electric adjustable height, back section, Trendelenburg& Reverse Trendelenburg, pneumatic adjustable foot section
- Unobstructed base design. All-welded base and top frame
- Trendelenburg/Reverse Trendelenburg plus or minus 20°
- Reliable 2pcs cloumn motors.Dual column lift system adds rigidity
- 75mm/3'' heavy duty locking casters. Each caster has a brake system
- Reliable column motor
- Height range from 54-94cm/21.3''-37'' in approx 30 seconds
- Hi-lo without load in approx 16s. Hi-lo with 250KGS/550LBS in 27s for higher and 15s for lower
- Option choice of safety rails/stirrups/paper roll holder/paper cutter/Safety Straps
- Warranty: 5 Years Construction, 3 Years Electrics
- Upholstery: PVC vinyl that is fire retardant and meet the requirement of BS 5852, stain, mildew, and wear resistance 150,000 times
- Qualification: ISO13485/ Passed MDR CE certification / Registered with the FDA in the United States
- Weight Capacity: 250kgs/551lbs

Product model

BASE | ELT200

LxWxH	195x60/70x(54-94)cm 76.8"x23.6"/27.6"x21.3"-37"
Control mode	motor
Height adjustment	handset
Lifting speed	30s
Down speed	30s

SECTION ELECTRIC TREATMENT TABLE CY-C107F -CHAOYANG MEDICAL

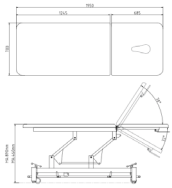

✪ FEATURES

Size: L1950*W700*H460-890mm

Description

1. Back part adjusted by double gas strut
2. Four retractable medical grade castors
3. Four large pad levelling feet
4. Medical grade PVC vinyl:fireproof,waterproof, stain, mildew, oil and wear resistant

Function:

1. Adjustable height:460-890mm
2. Adjustable back :78° to -32°
3. Adjustable height by 1pc actuator with foot bar system
4. Weight capacity:250kg

SECTION ELECTRIC TREATMENT TABLE CY-C107S -CHAOYANG MEDICAL

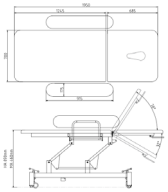

✪ FEATURES

Size: L1950*W700*H460-890mm

Description

1. Back part adjusted by double gas strut
2. Four retractable medical grade castors
3. Four large pad levelling feet
4. Medical grade PVC vinyl: fireproof, waterproof, stain, mildew, oil and wear resistant
5. 1 pair luxury siderail

Function:

1. Adjustable height:460-890mm
2. Adjustable back : 78° to -32°
3. Adjustable height by 1pc actuator with foot switch
4. Weight capacity:250kg

SECTION ELECTRIC TREATMENT TABLE CY-C107 -CHAOYANG MEDICAL

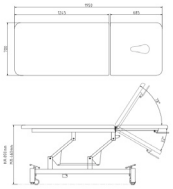

✪ FEATURES

Size: L1950*W700*H460-890mm

Description

1. Back part adjusted by double gas strut
2. Four retractable medical grade castors
3. Four large pad levelling feet
4. Medical grade PVC vinyl: fireproof, waterproof, stain, mildew, oil and wear resistant

Function:

1. Adjustable height:460-890mm
2. Adjustable back : 78° to -32°
3. Adjustable height by 1pc actuator with foot switch
4. Weight capacity:250kg

ACTUATORS 3 SECTION ELECTRIC TREATMENT TABLE CY-C108A-CHAOYANG MEDICAL

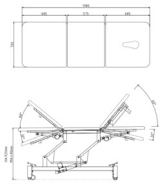

✪ FEATURES

Size: L1980*W700*H490-920mm

Description

1. Back, foot and height adjusted by actuators
2. Four retractable medical grade castors
3. Four large pad levelling feet
4. Medical grade PVC vinyl: fireproof, waterproof, stain, mildew, oil and wear resistant

Function:

1. Adjustable height:490-920mm
2. Adjustable back :60° to -20°
3. Adjustable foot:68°to -30°
4. 3pc actuator with foot switch or hand set
5. Weight capacity:250kg

ACTUATORS 3 SECTION ELECTRIC TREATMENT TABLE CY-C108E3

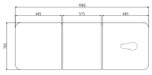

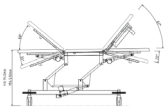

✪ FEATURES

Size: L1980*W700*H510-940mm

Description

1. Back and height and foot adjusted by actuators
2. Four retractable medical grade centrol locking castors
3. Medical grade PVC vinyl: fireproof, waterproof, stain, mildew, oil and wear resistant

Function:

1. Adjustable height:510-940mm
2. Adjustable back :60º to -20º
3. Adjustable foot:68ºto -30º
4. 3pc actuator with foot switch or hand set
5. Weight capacity:250kg

ACTUATORS 3 SECTION ULTRASOUND ELECTRIC TREATMENT TABLE CY-C108C AND D -CHAOYANG MEDICAL

3 Actuators 3 Section ultrasound electric treatment table CY-C108C

3 Actuators 3 Section ultrasound electric treatment table CY-C108D

✪ FEATURES

Size: L1980*W700*H490-920mm

Description

1. Back, foot and height adjusted by actuators
2. Four retractable medical grade castors
3. Four large pad levelling feet
4. Adjustable ultrasound support holder by gas strut
5. Medical grade PVC vinyl: fireproof, waterproof, stain, mildew, oil and wear resistant

Function:

1. Adjustable height:490-920mm
2. Adjustable back :60º to -28º
3. Adjustable foot:68º to -30º
4. 3pc actuator with foot switch or hand set
5. Weight capacity:250kg

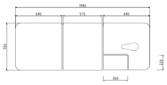

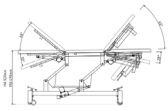

SECTION ELECTRIC TREATMENT TABLE CY-C108

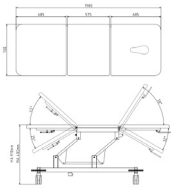

✪ FEATURES

Size: L1980*W700*H460-890mm

Description

1. Back and foot parts adjusted by double gas strut
2. Four retractable medical grade castors
3. Four large pad levelling feet
4. Medical grade PVC vinyl:fireproof,waterproof, stain, mildew, oil and wear resistant

Function:

1. Adjustable height:460-890mm
2. Adjustable back : 78° to -32°
3. Adjustable foot:45° to -25°
4. Adjustable height by 1pc actuator with foot switch
5. Weight capacity:250kg

SECTION ELECTRIC TREATMENT TABLE CY-C108B -CHAOYANG MEDICAL

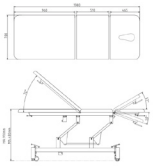

✪ FEATURES

Size: L1980*W700*H480-910mm

Description

1. Back and foot parts adjusted by double gas strut
2. Four retractable medical grade castors
3. Four large pad levelling feet
4. Medical grade PVC vinyl:fireproof, waterproof, stain, mildew, oil and wear resistant

Function:

1. Adjustable height:480-910mm
2. Adjustable back:57° to -50°
3. Adjustable foot:0° to 70°
4. Adjustable height by 1pc actuator with foot switch
5. Weight capacity:250kg

SECTION ELECTRIC TREATMENT TABLE CY-C108E -CHAOYANG MEDICAL

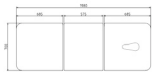

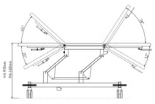

✪ FEATURES

Size: L1980*W700*H480-910mm

Description

1. Back and foot parts adjusted by dobule gas strut
2. Four retractable medical grade centrol locking castors
3. Medical grade PVC vinyl: fireproof, waterproof, stain, mildew, oil and wear resistant

Function:

1. Adjustable height:480-910mm
2. Adjustable back :78° to -32°
3. Adjustable foot:45° to -25°
4. 1pc actuator with foot switch adjustable height
5. Weight capacity:250kg

SECTION ELECTRIC TREATMENT TABLE CY-C108F

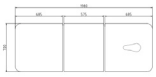

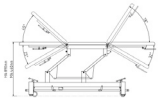

✪ FEATURES

Size: L1980*W700*H460-890mm

Description

1. Back and foot parts adjusted by double gas strut
2. Four retractable medical grade castors
3. Four large pad levelling feet
4. Medical grade PVC vinyl: fireproof, waterproof, stain, mildew, oil and wear resistant

Function:

1. Adjustable height:460-890mm
2. Adjustable back :78° to -32°
3. Adjustable foot:45° to -25°
4. Adjustable height by 1pc actuator with foot bar system
5. Weight capacity:250kg

SECTION ELECTRIC TREATMENT TABLE CY-C108S -CHAOYANG MEDICAL

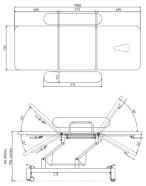

✪ FEATURES

Size:L1980*W700*H460-890mm

Description

1. Back and foot parts adjusted by double gas strut
2. Four retractable medical grade castors
3. Four large pad levelling feet
4. 1 pair luxury siderail
5. Medical grade PVC vinyl: fireproof, waterproof, stain, mildew, oil and wear resistant

Function:

1. Adjustable height:460-890mm
2. Adjustable back :78° to -32°
3. Adjustable foot:45° to -25°
4. Adjustable height by 1pc actuator with foot switch
5. Weight capacity:250kg

SECTION HYDRAULIC TREATMENT TABLE CY-C107H -CHAOYANG MEDICAL

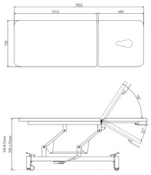

✪ FEATURES

Size:L1950*W700*H470-870mm

Description

1. Back part adjusted by double gas strut
2. Four retractable medical grade castors
3. Four large pad levelling feet
4. Medical grade PVC vinyl:fireproof, waterproof, stain, mildew, oil and wear resistant

Function:

1. Adjustable height:470-870mm
2. Adjustable back : 78° to -32°
3. Adjustable height by 1 set imported hydraulic pump
4. Weight capacity:230kg

SECTION HYDRAULIC TREATMENT TABLE CY-C108H -CHAOYANG MEDICAL

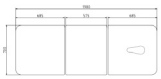

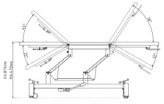

✪ FEATURES

Size:L1980*W700*H470-870mm

Description

1. Back and foot parts adjusted by double gas strut
2. Four retractable medical grade castors
3. Four large pad levelling feet
4. Medical grade PVC vinyl:fireproof, waterproof, stain, mildew, oil and wear resistant

Function:

1. Adjustable height:470-870mm
2. Adjustable back : 78° to -32°
3. Adjustable foot:45° to -25°
4. Adjustable height by 1pc imported hydraulic pump
5. Weight capacity:230kg

SECTION MULTIFUCTION ELECTRIC TREATMENT TABLE CY-C115F-CHAOYANG MEDICAL

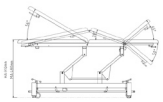

✪ FEATURES

Size:L1980*W700*H480-910mm

Description

1. Back and foot parts adjusted by double gas strut
2. Four retractable medical grade castors
3. Four large pad levelling feet
4. Medical grade PVC vinyl: fireproof, waterproof, stain, mildew, oil and wear resistant

Function:

1. Adjustable height:480-910mm by foot bar system
2. Adjustable back :65° to -50°
3. Adjustable foot:0° to 56°
4. Middle part adjustable:0 to 28°
5. Adjustable height and middle part by 2pc actuator
6. Weight capacity:250kg

SECTION MULTIFUCTION ELETRIC TREATMENT TABLE CY-C115AF -CHAOYANG MEDICAL

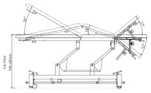

✪ FEATURES

Size:L1980*W700*H480-910mm

Description

1. Back and foot parts adjusted by double gas strut
2. Four retractable medical grade castors
3. Four large pad levelling feet
4. Medical grade PVC vinyl: fireproof, waterproof, stain, mildew, oil and wear resistant

Function:

1. Adjustable height:480-910mm by foot bar system
2. Adjustable back :57° to -52°
3. Adjustable foot:0° to 56°
4. Middle part adjustable:0 to 28°
5. Adjustable height and middle part by 2pc actuator
6. Weight capacity:250kg

SECTION ELECTRIC TRACTION BED CY-C101-CHAOYANG MEDICAL

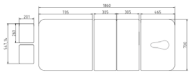

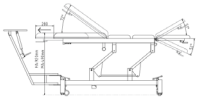

✪ FEATURES

Size:L2140*W700*H490-920mm

Description

1. Back and foot parts adjusted by dobule gas strut
2. Four retractable medical grade castors
3. Four large pad levelling feet
4. Medical grade PVC vinyl: fireproof, waterproof, stain, mildew, oil and wear resistant
5. 1pc flexion stool, 180°adjustable traction support

Function:

1. Adjustable height:490-920mm
2. Adjustable back :51° to -52°
3. Adjustable foot:0°to72°
4. Sliding distance of the bed is at least 28cm.
5. Adjustable height by 1pc actuator with foot switch
6. Weight capacity:230kg

SECTION ELECTRIC TRACTION BED CY-C101F-CHAOYANG MEDICAL

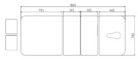

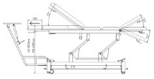

✪ FEATURES

Size:L2140*W700*H490-920mm

Description

1. Back and foot parts adjusted by double gas strut
2. Four retractable medical grade castors
3. Four large pad levelling feet
4. Medical grade PVC vinyl: fireproof, waterproof, stain, mildew, oil and wear resistant
5. 1pc flexion stool, 180° adjustable traction support

Function:

1. Adjustable height:490-920mm
2. Adjustable back :51° to -52°
3. Adjustable foot:0°to72°
4. Sliding distance of the bed is at least 28cm.
5. Adjustable height by 1pc actuator with foot bar system
6. Weight capacity:230kg

SECTION MULTIFUNCTION ELECTRIC TREATMENT TABLE CY-C115 -CHAOYANG MEDICAL

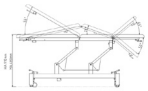

✪ FEATURES

Size:L1980*W700*H480-910mm

Description

1. Back and foot parts adjusted by double gas strut
2. Four retractable medical grade castors
3. Four large pad levelling feet
4. Medical grade PVC vinyl:fireproof,waterproof, stain, mildew, oil and wear resistant

Function:

1. Adjustable height:480-910mm
2. Adjustable back :65° to -50°
3. Adjustable foot:0° to 56°
4. Middle part adjustable:0 to 28°
5. Adjustable height and middle part by 2pc actuator with foot switch
6. Weight capacity:250kg

SECTION ELECTRIC TREATMENT TABLE CY-C103F-CHAOYANG MEDICAL

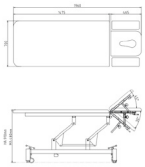

✪ FEATURES

Size: L1960*W700*H480-910mm

Description

1. Back part adjusted by double gas strut
2. Four retractable medical grade castors
3. Four large pad levelling feet
4. Medical grade PVC vinyl:fireproof, waterproof, stain, mildew, oil and wear resistant
5. Adjustable height of armrest

Function:

1. Adjustable height:480-910mm
2. Adjustable back : 45º to -30º
3. Adjustable height by 1pc actuator with foot bar system
4. Weight capacity:250kg

SECTION ELECTRIC TRACTION BED CY-C111A-CHAOYANG MEDICAL

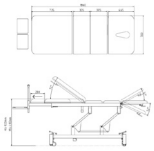

✪ FEATURES

Size: L2140*W700*H490-920mm

Description

1. Back and foot parts adjusted by double gas strut
2. Four retractable medical grade castors
3. Four large pad levelling feet
4. Medical grade PVC vinyl:fireproof,waterproof, stain, mildew, oil and wear resistant
5. 1pc flexion stool,stainless steel traction support

Function:

1. Adjustable height:490-920mm
2. Adjustable back :51º to -52º
3. Adjustable foot:0ºto72º
4. Sliding distance of the bed is at least 28cm.
5. Adjustable height by 1pc actuator with foot switch
6. Weight capacity:230kg

SECTION ELECTRIC TREATMEBT TABLE CY-C110 -CHAOYANG MEDICAL

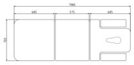

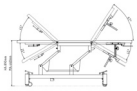

✪ FEATURES

Size: L1980*W700*H460-890mm

Description

1. Back and foot parts adjusted by double gas strut
2. Four retractable medical grade castors
3. Four large pad levelling feet
4. 2pcs adjustable height armrest
5. Medical grade PVC vinyl:fireproof, waterproof, stain, mildew, oil and wear resistant

Function:

1. Adjustable height:460-890mm
2. Adjustable back :67° to -45°
3. Adjustable foot:45° to -25°
4. Adjustable height by 1pc actuator with foot switch
5. Weight capacity:250kg

SECTION ELECTRIC TREATMENT TABLE CY-C110F -CHAOYANG MEDICAL

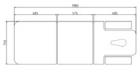

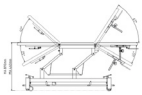

✪ FEATURES

Size: L1980*W700*H460-890mm

Description

1. Back and foot parts adjusted by double gas strut
2. Four retractable medical grade castors
3. Four large pad levelling feet
4. 2pcs adjustable height armrest
5. Medical grade PVC vinyl: fireproof,waterproof, stain, mildew, oil and wear resistant

Function:

1. Adjustable height:460-890mm
2. Adjustable back :67° to -45°
3. Adjustable foot:45° to -25°
4. Adjustable height by 1pc actuator with foot bar system
5. Weight capacity:250kg

SECTION HYDRAULIC TREATMENT TABLE CY-C110H -CHAOYANG MEDICAL

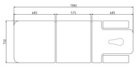

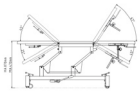

✪ FEATURES

Size: L1980*W700*H470-870mm

Description

1. Back and foot parts adjusted by dobule gas strut
2. Four retractable medical grade castors
3. Four large pad levelling feet
4. 2pcs adjustable height armrest
5. Medical grade PVC vinyl: fireproof, waterproof, stain, mildew, oil and wear resistant

Function:

1. Adjustable height:470-870mm
2. Adjustable back : 67° to -45°
3. Adjustable foot:45° to -25°
4. Adjustable height by 1pc imported hydraulic pump
5. Weight capacity:250kg

SECTION MULTIFUCTION ELECTRIC TREATMENT TABLE CY-C115A -CHAOYANG MEDICAL

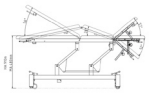

✪ FEATURES

Size: L1980*W700*H480-910mm

Description

1. Back and foot parts adjusted by double gas strut
2. Four retractable medical grade castors
3. Four large pad levelling feet
4. 2pcs adjustable height armrest
5. Medical grade PVC vinyl:fireproof, waterproof, stain, mildew, oil and wear resistant

Function:

1. Adjustable height:480-910mm
2. Adjustable back : 57° to -52°
3. Adjustable foot:0° to 56°
4. Middle part adjustable:0°to 28°
5. Adjustable height and middle part by 2pc actuator with foot switch
6. Weight capacity:250kg

SECTION ELECTRIC TREATMENT TABLE CY-C102 -CHAOYANG MEDICAL

✪ FEATURES

Size: L1980*W700*H460-890mm

Description
1. Back and foot parts adjusted by double gas strut
2. Four retractable medical grade castors
3. Four large pad levelling feet
4. Medical grade PVC vinyl:fireproof, waterproof,
5. stain, mildew, oil and wear resistant

Function:
1. Adjustable height:460-890mm
2. Back tilt angles:67°to -45°
3. Adjustable split foot: 51°to -33°
4. Adjustable height by 1pc actuator with foot switch
5. Weight capacity:250kg

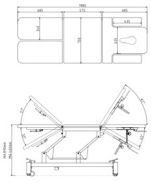

SECTION ELECTRIC TREATMENT TABLE CY-C123-CHAOYANG MEDICAL

✪ FEATURES

Size: L1980*W700*H480-910mm

Description
1. Back part adjusted by double gas strut
2. Four retractable medical grade castors
3. Four large pad levelling feet
4. Medical grade PVC vinyl: fireproof, waterproof, stain, mildew, oil and wear resistant

Function:
1. Adjustable height:480-910mm
2. Adjustable back : 70° to -40°
3. Adjustable foot:0° to 60°
4. Adjustable height by 1pc actuator with foot switch
5. Weight capacity:250kg

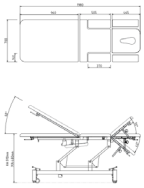

ADULT AND CHILDREN ELECTRIC TILT TABLE CY-C109A&B-CHAOYANG MEDICAL

Adult electric tilt table CY-C109A

Size: L1970*W650*H540-870mm

Children electric tilt table CY-C109B

Size: L1660*W650*H540-870mm

FEATURES

Description

1. 1pc working table, 4pcs patient strap, tilt angle inclinometer
2. 2pcs motors (one motor controls height, other one controls tilt angle)
3. 4pcs 3" castors
4. Weight capacity:230kg

Function:

1. Standing angle: 0 °to 82°
2. Foot rest adjustable angle: 12° to 90°(relative to horizontal direction)
3. Height adujstable: 540-870mm

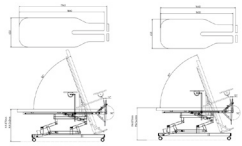

CONTOURED ELECTRIC TREATMENT TABLE CY-C105A CHAOYANG MEDICAL

FEATURES

Size: L1980*W700*H460-890mm

Description

1. Four retractable medical grade castors
2. Four large pad levelling feet
3. Medical grade PVC vinyl:fireproof,waterproof,
4. stain, mildew, oil and wear resistant
5. Adjustable head support and extended foot part

Function:

1. Adjustable height:460-890mm
2. Adjustable head support from 25° to -60°
3. Adjustable height by 1pc actuator with foot switch
4. Weight capacity:250kg

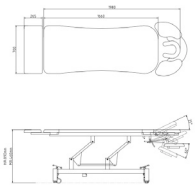

ELECTRIC BOBATH TREATMENT TABLE CY-C104W-CHAOYANG MEDICAL

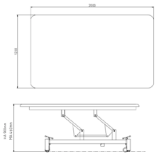

✪ FEATURES

Size: L2000*W1200*H460-900mm

Description

1. Four retractable medical grade castors
2. Four large pad levelling feet
3. Medical grade PVC vinyl:fireproof, waterproof,
4. stain, mildew, oil and wear resistant

Function:

1. Adjustable height:460-900mm
2. Adjustable height by 1pc actuator with foot switch
3. Weight capacity:330kg

ELECTRIC BOBATH TREATMENT TABLE CY-C105W-CHAOYANG MEDICAL

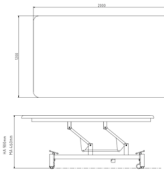

✪ FEATURES

Size:L2000*W1200*H460-900mm

Description

1. Four retractable medical grade castors
2. Four large pad levelling feet
3. Medical grade PVC vinyl:fireproof,waterproof, stain, mildew, oil and wear resistant

Function:

1. Adjustable height:460-900mm
2. Adjustable height by 1pc actuator with foot switch
3. Weight capacity:330kg

ELECTRIC BOBATH TREATMENT TABLE CY-C107W-CHAOYANG MEDICAL

FEATURES

Size: L2060*W1200*H460-900mm

Description
1. Back part adjusted by double gas strut
2. Four retractable medical grade castors
3. Four large pad levelling feet
4. Medical grade PVC vinyl:fireproof, waterproof, stain, mildew, oil and wear resistant

Function:
1. Adjustable height:460-900mm
2. Adjustable back :90° to -33°
3. Adjustable height by 1pc actuator with foot switch
4. Weight capacity:330kg

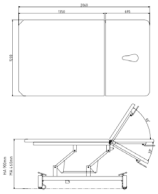

ELECTRIC BOBATH TREATMENT TABLE CY-C108W-CHAOYANG MEDICAL

FEATURES

Size: L2000*W1000*H460-900mm

Description
1. Back and foot parts adjusted by double gas strut
2. Four retractable medical grade castors
3. Four large pad levelling feet
4. Medical grade PVC vinyl: fireproof, waterproof, stain, mildew, oil and wear resistant

Function:
1. Adjustable height:460-900mm
2. Adjustable back : 78° to -32°
3. Adjustable foot:45° to -25°
4. Adjustable height by 1pc actuator with foot switch
5. Weight capacity:330kg

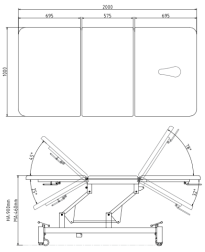

ELECTRIC PODIATRY CHAIR CY-C100-CHAOYANG MEDICAL

✪ FEATURES

Size:L1900 * W600 * H480-910mm

Description

1. Back part adjusted by double gas strut and foot part adjusted single gas strut, seat and height of table adjusted by actuators
2. Four retractable medical grade castors
3. Four large pad levelling feet
4. 1 pair adjustable armrest
5. Medical grade PVC vinyl:fireproof, waterproof, stain, mildew, oil and wear resistant

Function:

1. Adjustable height:480-910mm
2. Adjustable back:0°to78°°
3. Adjustable foot:0°to -80°
4. Adjustable seat:0°to 20°
5. Adjustable height and seat by 2pc actuator with hand switch
6. Weight capacity:250kg

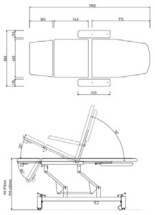

ELECTRIC TREATMENT TABLE CY-C105

✪ FEATURES

Size: L1950*W700*H460-890mm

Description

1. Four retractable medical grade castors
2. Four large pad levelling feet
3. Medical grade PVC vinyl:fireproof, waterproof, stain, mildew, oil and wear resistant

Function:

1. Adjustable height:460-890mm
2. Adjustable height by 1pc actuator with foot switch
3. Weight capacity:250kg

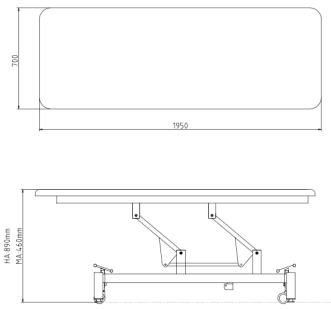

ELECTRIC VET TABLE CY-C105B-CHAOYANG MEDICAL

✪ FEATURES

Size: L1100 * W560 * H410-960mm

Size:L1100*W560*h430-975mm

1. Electric Hi Lo operation by footbar, Height range from 41cm to 96cm in approx 30 seconds.
2. Durable 304 stainless steel patient surface Sleek new design with rounded frame legs for safety
3. 10cm lockable castors for safety and mobility
4. Reliable TiMotion motor with rechargeable battery5) Weight Capacity: 250KG

Examination table
CY-C111
Size: L1950*W710*H820mm

Examination table
CY-C111F（Round legs）
Size: L1950*W710*H820mm

Examination table
CY-C111D （Round legs）
Size: L1950*W710*H820mm

Examination Table
CY-C111E
Size: L1850*W620*H680mm

MULTIFUNCTION ELECTRIC TREATMENT TABLE CY-C119-CHAOYANG MEDICAL

✪ FEATURES

Size: L1920 * W700 * H480-910mm

Description:
1. All gas struts standard supports each part
2. Four retractable medical grade castors
3. Four large pad levelling feet
4. 2 pair adjustable arm rest
5. Medical grade PVC vinyl:fireproof, waterproof, stain, mildew, oil and wear resistant

Function:
1. Adjustable head: 35°to -45°.
2. Adjustable backrest:0°to 55°
3. Adjustable seat: 0°to 20°.
4. Adjustable foot : 0°to -45°.
5. Adjustable height:480-910mm
6. Adjustable height by 1pc actuator with foot switch
7. Weight capacity:250kg

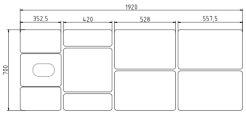

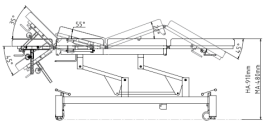

MULTI-PURPOSE ELECTRIC TREATMENT CHAIR CY-C106 - CHAOYANG MEDICAL

✪ FEATURES

Size: L1900*W550*H480-910mm

Description:
1. Double gas strut back and foot adjustment
2. Four retractable medical grade castors
3. Four large pad levelling feet
4. Medical grade PVC vinyl: fireproof, waterproof, stain,mildew, oil and wear resistant
5. Luxury head support and double arm holders,adjustable height of armrest,top of armrest can move front, behind, left and right
6. It can be used as chair and bed for SPA

Function:
1. Adjustable height:480-910mm
2. Adjustable back :0° to 70°
3. Adjustable foot:0° to -75°
4. 1pc actuator with foot switch adjustable height
5. Weight capacity:250kg

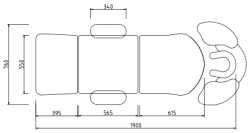

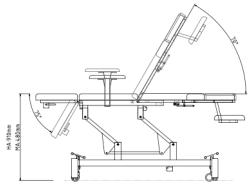

PORTABLE MASSAGE TABLES -CHAOYANG MEDICAL

Portable massage table
CY-C120
Size: L1830*W700*H610mm

Portable massage table
CY-C121
Size: L1830*W700*H610mm

CY-C122
Size: L1830*W620*H580mm

Aluminum massage table
CY-C112
Size: L1820*W630*H635-810mm

Folding massage table
CY-C116
Size L1800*W600*H700mm

Folding massage table
CY-C117
Size L1800*W600*H700mm

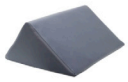

Triangle bolster
Size: L500*W500*H150mm
L500*W500*H200mm
L500*W500*H300mm
L500*W500*H500mm

Half round bolster
Size: L650*W205*H135mm

Full round bolster
Size: L600*D180mm

BACK BELT-MED

- Safe E-clips
- Comfortable fit
- Encourages natural movement
- Suitable for end-users with poor stability or who have difficulty getting up

The Back Belt sling works with a sit-to-stand lift in order to safely raise or lower persons from a toilet, bed or chair. The padded back provides comfortable back support while getting up. The non-slip surface on the inside of the back prevents the sling from sliding up while the client gets up, allowing both the client and the caregiver to focus entirely on standing up.

Model: **25130C**

Back Belt E-clip (clips), polyester, max. 250 kg (SWL)

Model	Size	A	B	C
25130C - M 03-HCA-HCA-0038	Medium	83 cm	30 cm	39 cm
25130C - L 03-HCA-HCA-0039	Large	92 cm	34 cm	44 cm

BASIC SLING-MED

- Shoulder high model with divided leg parts
- No reinforcements, handles or padding
- Suitable for end-user with poor trunk control (but with good head stability)
- Upright sitting position

The Basic soft sling can be used in most lifting situations, fits most end-users and is a good choice if it is not established who is going to be using the sling.
Basic Slings offer good support for the entire back without head support, reinforcements or padding. They are suitable for persons with poor trunk stability and upright seating which is especially helpful to ensure proper positioning is achieved when the end-user is placed in a chair or other seating.

Model: **25045**

Basic Sling Net, polyester net (loops), max. 300 kg (SWL)

Model: **25070**

Basic Sling, polyester (loops), max. 300 kg (SWL)

Model		Size	A	B	C
25045 - M 03-HCA-HCA-0046	**25070 - M** 03-HCA-HCA-0075	Medium	31 cm	88 cm	63 cm
25045 - L 03-HCA-HCA-0001	**25070 - L** 03-HCA-HCA-0003	Large	37 cm	93 cm	65 cm
25045 - XL 03-HCA-HCA-0002	**25070 - XL** 03-HCA-HCA-0098	Extra Large	39 cm	97 cm	70 cm

CHIROPRACTIC TABLE-MED

FEATURES

- 7-section table.
- Head section divided into 2 parts (adjustable gap: 1-5 cm).
- 2 possibilities of head section adjustment: from -35° to +25° with a gas spring and additional adjustment from 0° to +18° (in oposite direction) via second gas spring.
- Rotating slide down armrests (adjustment range: up to -24 cm vertical).
- 2 possibilities of leg section adjustment: from 0° to -25° and side rotation from -15° to 15°.
- Electric high/low height adjustment via foot-operated controller at two sides of the table base.
- 3-layer padding 40 mm, with upholstery in many colours**.
- Shift of shank support: 0-24 cm.
- Settings lock: rotation and shift.
- DROP option (2 cm).
- Second DROP option (2 cm).
- Mechanism of dynamic force compensation - to minimize the patient's body weight resting on the leg section of the table via an offload and stearing mechanism.
- 2 fixed wheels + 2 castors central lifted (F2 system).
- LUX upholstery (PU) - option.

Technical data:

Dimensions (LxW) [cm]:	185-210 x 50 (55 - head section + armrest)
Height adjustment [cm]:	55-96
Weight [kg]:	135
Max. lifting capacity [kg]:	180
Shift [cm]:	0-24
Power supply [V; Hz]:	0-24100-240; 50-60

Box dimensions: **220 x 68 x 75 cm** Weight: **+25 kg**

Length: **185-210 cm** | Height: **55-96 cm** | Width: **55 cm** | Weight: **135 kg** | Max load*: **180 kg**

DEMIRO SPINE STOOL-MED INMED

Supports correct posture
The stool's ability to rotate horizontally the body in space (360°) makes it easy to adapt to different working positions. Regular use helps to maintain correct posture, which can ultimately help to reduce the discomfort associated with sitting for long periods of time.

Adjustable seat height
The seat height adjustment allows precise positioning to achieve a 90-degree knee flexion angle. This is one of the elements that helps to maintain correct posture by reducing the load on the spine and the risk of hunching.

Comfort And Ergonomics At The Same Time
Using a seat that tilts back and forth allows you to adjust the angle to match the natural curves of the spine, helping to maintain correct posture.

EXAMINATION AND TREATMENT TABLE KANGOO-MED

FEATURES

- 3- section table, with a long head section.
- Adjustable head and foot section from -18° to 85° with a gas springs.
- Trendelenburg/reverse Trendelenburg.
- Face hole in the head section with a removable face hole cover.
- Two-layer padding with upholstery in many colours**.
- Powder coated stable steel frame.
- 2 folding horizontal barriers on both sides; fold-down when table subjected to normal use activities.
- Electric height adjustment (47-92 cm) using manual remote control.
- Battery backup, cordless operation.
- Safety - table equipped with an access lock - safety key and automatic locking (to lock height adjustment function).
- 4 large 125 mm braked castors with foot locking mechanism.
- LUX upholstery (PU) as option.

Technical data:

Height adjustment [cm]:	46-91
Dimensions (length x width) [cm]:	189 x 72
Weight [kg]:	116
Max. lifting capacity [kg]:	250
Paper roll width [cm]:	60
Power supply [V/Hz]:	100-240/50-60

Box dimensions: **220 x 85 x 75 cm** Weight: **+50 kg**

Length: **189 cm** | Height: **46-91 cm** | Width: **72 cm** | Weight: **116 kg** | Max load*: **250 kg**

EXAMINATION TABLE-MED INMED

Pacific Examination and Treatment Table is intended for standard examinations and procedures carried out in a wide range, also used for simple medical activities. It is usually used in professional medical care facilities, i.e. hospitals, clinics, in sanatoriums, nursing homes, as well as in doctor's offices, treatment rooms. Well-thought-out design, the possibility to adjust the angles of the sections and the stability of the product ensure that the patient is in a comfortable position for examination/treatment.
The benefits of treatment tables are based on the fact that it is possible for the patient to take the right position for the treatment, the possibility to adjust the height and/or sections of the table, which facilitates the work of the rehabilitator/physiotherapist and increases the comfort of the patient during the massage treatment. PACIFIC table is characterized by stability, reliability and ease of use. These features result from careful design, manufacturing methods applied in production and the quality assurance system.

✪ PACIFIC HAWAII FEATURES:

- 2- or 4-section table with electric height adjustment,
- hand-held remote control,
- head section adjustment by the means of gas spring, with shaped face hole with crescent plug,
- foldable armrests lowered till 19 cm (only in 4-section table),
- multi-layered and very soft upholstery of 15 cm thickness,
- Trendelenburg/reverse Trendelenburg position (15o),
- 2 wheels, 2 feet.

Pacific HAWAII

✪ PACIFIC FIJI FEATURES:

- 5- or 7-section table with electric height adjustment,
- hand-held remote control,
- head section adjustment by the means of gas spring, with shaped face hole with crescent plug,
- foldable armrests lowered till 19 cm (only in 7-section table),
- adjustment of: back / thighs / shank sections by means of electric actuators,
- multi-layered and very soft upholstery of 15 cm thickness,
- Trendelenburg/reverse Trendelenburg position (15o),
- 2 wheels, 2 feet.

Pacific FIJI

FULL BODY SLING-MED

- High back model with divided leg parts
- Extra head support
- Suitable for end-users with poor trunk stability
- Reclined sitting position
- Available with Loops or Clips

The Full Body sling offers good support for the entire back and extra support for the head. Available in 3 different fabrics, the Full Body sling can be used in most lifting situations and fits most end-users.
The Full Body slings are designed to create a reclined seated position which is extremely helpful if the person has poor trunk stability and/or a tendency to overstress themselves (spastic performance) or are hypertonic. The reclined position prevents the user from sliding out of the sling.

Model: **25005**

Full Body Sling Net, polyester net (loops), max. 300 kg (SWL)

Model	Size	A	B	C
25005 - M 03-HCA-HCA-0082	Medium	26 cm	85 cm	95 cm
25005 - L 03-HCA-HCA-0058	Large	34 cm	96 cm	95 cm
25005 - XL 03-HCA-HCA-0089	Extra Large	36 cm	105 cm	106 cm

MASSAGE TABLE JAGUAR P3.F0-F4-MED

FEATURES

- 3-section massage table with postural drainage setting.
- Postural drainage with an electric actuator operated by 2 switches from both sides of the table.
- Width of table top: 69 cm.
- Adjustable head section from -70° to +40° with a gas spring.
- Round face hole in the head section with a removable face hole cover which increases patient's comfort (2 types of cover: round and crescent).
- Adjustable leg section from 0° to 90° with gas spring.
- Two-layer padding with upholstery in many colours.
- Powder coated, very stable scissor steel frame.
- 2 side brackets for the fixation of stabilization belts and elastic bands.
- Traction support sleeves.
- Personal Authorization Safety System with 2 magnetic safety keys.
- HalloTronic® System electric high/low height adjustment from 54 to 95 cm with a lifting capacity up to 200 kg.
- Powder coated steel high/low height adjustment foot bar accessible from each side of the table.
- Rubber feet with 1 cm height adjustment allowing for the levelling of the table.
- Two ways of frame painting: ,,white" or ,,twintone".

2 ways of frame painting

Box dimensions: **220 x 85 x 75 cm** Weight: **+50 kg**

Length: **205 cm** | Height: **54-95 cm** | Width: **69 cm** | Weight: **99/112 kg** | Max load*: **200 kg**

MASSAGE TABLE PUMA-MED

FEATURES

- 2-section massage table with a long head section.
- Width of table top: 69 cm.
- Adjustable long head section from -20° to +85° or 0° to +85° (with special frame) with 2 gas springs.
- Round face hole in the head section with a removable face hole cover (2 types: round and crescent).
- Two-layer padding with upholstery in many colours.
- Powder coated, very stable steel frame.
- 2 side brackets for the fixation of stabilization belts and elastic bands.
- Personal Authorization Safety System with 2 safety magnetic keys.
- HalloTronic® System for electric high/low height adjustment from 52 to 93 cm with a lifting capacity up to 200 kg.
- Powder coated steel high/low height adjustment foot bar accessible from each side of the table.
- Rubber feet with 1 cm height adjustment allowing for the levelling of the table.
- Two ways of frame painting: ,,white'' or ,,twintone''.

2 ways of frame painting

Box dimensions: **220 x 85 x 75 cm** Weight: **+50 kg**

Length: **208 cm** | Height: **52-93 cm** | Width: **69 cm** | Weight: **88/103 kg** | Max load*: **200 kg**

MASSAGE TABLE JAGUAR P5.F0-F4-MED

FEATURES

- 5-section massage table with the postural drainage setting.
- Postural drainage with an electric actuator operated by 2 switches from both sides of the table.
- Width of table top: 69 cm.
- Adjustable head section from -70° to +40° with a gas spring.
- Round face hole in the head section with a removable face hole cover which increases patient's comfort (2 types of cover: round and crescent).
- Rotating slide-down armrests.
- Adjustable leg section from 0° to 90° with a gas spring.
- Two-layer padding with upholstery in many colours.
- Powder coated, very stable scissor steel frame.
- 2 side brackets for the fixation of stabilization belts and elastic bands.
- Traction support sleeves.
- Personal Authorization Safety System with 2 safety magnetic keys.
- HalloTronic® System electric high/low height adjustment from 54 to 95 cm with a lifting capacity up to 200 kg.
- Powder coated steel high/low height adjustment foot bar accessible from each
- side of the table.
- Rubber feet with 1 cm height adjustment allowing for the levelling of the table.
- Two ways of frame painting: ,,white" or ,,twintone".

2 ways of frame painting

Box dimensions: **220 x 85 x 75 cm** Weight: **+50 kg**

Length: **205 cm** | Height: **54-95 cm** | Width: **69 cm** | Weight: **102/115 kg** | Max load*: **200 kg**

MASSAGE TABLE LEOPARD S3.F0-F4-MED

FEATURES

- 3-section massage table.
- Width of table top: 69 cm.
- Adjustable head section from -70° to +40° with a gas spring.
- Round face hole in the head section with a removable face hole cover which increases patient's comfort (2 types of cover: round and crescent).
- Adjustable leg section from 0° to 90° with a gas spring.
- Two-layer padding with upholstery in many colours.
- Powder coated, very stable scissor steel frame.
- 2 side brackets for the fixation of stabilization belts and elastic bands.
- Traction support sleeves.
- Personal Authorization Safety System with 2 magnetic safety keys.
- HalloTronic® System electric high/low height adjustment from 52 to 93 cm with a lifting capacity up to 200 kg.
- Powder coated steel high/low height adjustment foot bar accessible from each side of the table.
- Rubber feet with 1 cm height adjustment allowing for the levelling of the table.
- Two ways of frame painting: ,,white'' or ,,twintone''.

2 ways of frame painting

Box dimensions: **220 x 85 x 75 cm** Weight: **+50 kg**

Length: **205 cm** | Height: **52-93 cm** | Width: **69 cm** | Weight: **93/106 kg** | Max load*: **200 kg**

MASSAGE TABLE LEOPARD S5.F0-F4-MED

FEATURES

- 5-section massage table.
- Width of table top: 69 cm.
- Adjustable head section from -70° to +40° with a gas spring.
- Round face hole in the head section with a removable face hole cover which increases patient's comfort (2 types of cover: round and crescent).
- Rotating slide-down armrests.
- Adjustable leg section from 0° to 90° with a gas spring.
- Two-layer padding with upholstery in many colours.
- • Powder coated, very stable scissor steel frame.
- 2 side brackets for the fixation of stabilization belts and elastic bands.
- Traction support sleeves.
- Personal Authorization Safety System with 2 magnetic safety keys.
- HalloTronic® System electric high/low height adjustment from 52 to 93 cm with a lifting capacity up to 200 kg.
- Powder coated steel high/low height adjustment foot bar accessible from each side of the table.
- Rubber feet with 1 cm height adjustment allowing for the levelling of the table.
- Two ways of frame painting: ,,white" or ,,twintone".

2 ways of frame painting

Box dimensions: **220 x 85 x 75 cm** Weight: **+50 kg**

Length: **205 cm** | Height: **52-93 cm** | Width: **69 cm** | Weight: **96/109 kg** | Max load*: **200 kg**

MASSAGE TABLE-MED

FEATURES

- 2-section massage table.
- Width of table top: 69 cm.
- Adjustable head section from -70° to +40° with a gas spring.
- Round face hole in the head section with a removable face hole cover which increases patient's comfort (2 types of cover: round and crescent).
- Two-layer padding with upholstery in many colours.
- Powder coated, stable scissor steel frame.
- 2 side brackets for the fixation of stabilization belts and elastic bands
- Traction support sleeves. Personal Authorization Safety System with 2 magnetic safety keys.
- HalloTronic® System electric high/low height adjustment from 52 to 93 cm with a lifting capacity up to 200 kg.
- Powder coated steel high/low height adjustment foot bar accessible from each side of the table.
- Rubber feet with 1 cm height adjustment allowing for the levelling of the table.
- Two ways of frame painting: ,,white" or ,,twintone".

Box dimensions: **220 x 85 x 75 cm** Weight: **+50 kg**

Length: **202 cm** | Height: **52-93 cm** | Width: **69 cm** | Weight: **86/99 kg** | Max load*: **200 kg**

METAL TREATMENT COUCH-MED INMED

FEATURES

- Adjustable head rest 10 steps (from 0° to 50°).
- Padding with upholstery in many colours.
- Powder coated, very stable steel frame.
- Paper towel hanger (option).

Box dimen.: **198 x 66 x 17 cm** Weight: **+2 kg**

Technical data:

Number of sections:	2
Head rest section angle adjustment [°]:	0/+50
Dimensions (L x W) [cm]:	193 x 61
Hight [cm]	65
Maxium paper width [cm]:	60
Weight [kg]:	16
Max. safe load [kg]:	150

FEATURES

- Upholstery in many colours.
- Height adjustment.
- Tilting seat (front/back).
- Chrome-plated base.
- Rubberised castors.

Box dimen.: **60 x 59 x 24 cm** Weight: **+1,5 kg**

Technical data:

Height [cm]:	54-74
Tilting adjustment [°]:	15
Max. load [kg]:	150
Weight [kg]:	7,5
Base ø [cm]:	60
Seat dimension [cm]:	43x34

NEUROLOGICAL REHABILITATION TABLE-MED

FEATURES

- 1-section table (electric or hydraulic).
- Extra wide surface.
- Two-layer padding with upholstery in many colours**.
- Powder coated, very wide and stable steel frame.
- Personal Authorization Safety System with 2 magnetic safety keys (only in el. version).
- HalloTronic® System for electric high/low height adjustment from 50 to 99 cm (el. version).
- Hydraulic high/low height adjustment (50-99 cm) via foot pedal accessible from both sides of the table (hydr. version).
- Powder coated steel high/low height adjustment foot bar accessible from each side of the table (el. version).
- Rubber feet with 1 cm height adjustment allowing for the levelling of the table.
- F4 wheeling system - dual-lever retractable castor wheeling system composed of 4 directional castors with central brake and 4 legs with rubber feet.
- Max. lifting capacity up to 200 kg.
- Two ways of frame painting: ,,white" or ,,twintone".
- Max. working load up to 275 kg.

Electric height adjustment

Hydraulic height adjustment

Box dimensions: **220 x 136 x 75 cm** Weight: **+90 kg**

Length: **200 cm** | Height: **50-99 cm** | Width: **120 cm** | Weight: **150 kg** | Max load*: **200 kg**

NEXUS MASSAGE TABLE-MED INMED

NEXUS S5 / S5-H

NEXUS S5

NEXUS S5-H

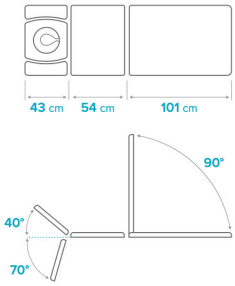

NEXUS P3 / P3-H

NEXUS P3

NEXUS P3-H

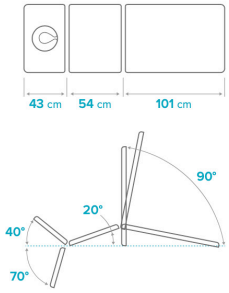

NEXUS P5 / P5-H

NEXUS P5

NEXUS P5-H

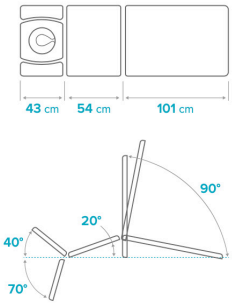

POSITIONING SLING-MED

- Slings for turning and repositioning of end-users
- Offer airflow and breathability
- Ideal for critical care units, persons with no core and head stabilty
- 8 reinforced straps (6 body, 2 head)

The positioning slings from ventilated material are ideal for critical care units as they can be placed behind the person like a sheet. These slings are ideal for sudden or intended positioning/ repositioning, turning and lateral transfers.
These slings easily fit most hospital beds and the material does not promote skin breakdown allowing the sling to remain behind the end-user for short periods of time.

Model: **NSB-401-ST**

Positioning Sling, ventilated material (loops), max. 454 kg (SWL)

Model: **NSB-410-ST**

Bariatric Positioning Sling, ventilated material (loops), max. 454 kg (SWL)

Model	Size	A	B
NSB-401-ST 03-HCA-HCA-0073	One size	107 cm	198 cm
NSB-410-ST - L 03-HCA-HCA-0091	Large	132 cm	208 cm
NSB-410-ST - XL 03-HCA-HCA-0092	Extra Large	147 cm	208 cm

SHOWER CHAIR MOHICAN II,MOHICAN II PLUS-MED INMED

FEATURES

- Battery operated
- Made of welded powder-coated stainless steel sections
- Hand control with functions: raising/lowering seat, forward/ backward tilt (seat)
- Actuators: main actuator (on both sides) for raising/lowering seat; actuator for tilting
- Footboard with height adjustment and a foldable base
- 4 castors with a brake
- Removable seat with a plug and with a toilet bowl
- Removable battery - easy to recharge

Technical Data:

Type	MoHiCan II	MoHiCan II PLUS
Length [mm]:	890	890
Width [mm]:	658	778
Height of the push bar (min./max) [mm]:	1028/1260	
Raising height range [mm]:	495-1010	
Tilt adjustment [°]:	-5/+27	
Height of legrest (from floor) [mm]:	112	
Turning diameter [mm]:	1100	1200
Lifting speed LINAK (raising) (0/max load) [sec]:	42/49	
Lifting speed LINAK (lowering) (0/max load) [sec]:	47/41	
Diameter of castors with brake [mm]:	125	
Power supply [V, HZ]:	100-240~, 50/60	
Battery capacitance [Ah]:	2,9	
Protection level of the control panel:	IPX6	
Max load (SWL) [kg]:	180	250
Mass [kg]:	60	70
Min. charging time [h]:	5	5

MoHiCan II

MoHiCan II PLUS

Packing dimensions: **100 x 71 x 123 cm** Weight: **+16 kg**

Packing dimensions (Plus): **100 x 85 x 122 cm** Weight: **+20 kg**

TERAPEUTA SCM-2-MED INMED

FEATURES

- 2-section massage table with a long head section.
- Adjustable long head section from 0° to +85° with 2 gas springs.
- Face hole in the head section with a removable face hole cover.
- Two-layer padding with upholstery in many colours.
- Powder coated, very stable steel frame.
- Optional 2 side brackets for the fixation of stabilization belts and elastic bands or 2 retractable side railings for fall prevention.
- Personal Authorization Safety System with 2 safety magnetic keys.
- HalloTronic® System for electric high/low height adjustment from 47 to 95 cm with a lifting capacity up to 225 kg
- Powder coated steel high/low height adjustment foot bar accessible from each side of the table.
- Rubber feet with 1 cm height adjustment allowing for the levelling of the table.
- Two ways of frame painting: ,,white'' or ,,twintone''.

2 ways of frame painting

Box dimensions: **220 x 85 x 75 cm** Weight: **+50 kg**

Length: **202 cm** | Height: **47-95 cm** | Width: **69 cm** | Weight: **80/95 kg** | Max load*: **225 kg**

SLINGS-MED

The catalog contains a proposal of various slings suitable for Meden-Inmed patient lifts. The models differ in purpose, material from which they are made and the method of mounting: loops or clips. The slings are available in various sizes. They are designed with maximum functionality as well as the safety and comfort of end-users in mind.

Full Body Sling
Model: 25005

Basic Sling
Model: 25045

Toileting Sling
Model: 25080

Toileting Sling High
Model: 25090

TERAPEUTA SCM-2-MED INMED

FEATURES

- 2-section massage table.
- Adjustable head section from -70° to +40° with a gas spring.
- Face hole in the head section with 2 removable face hole covers (round, crescent).
- Two-layer padding with upholstery in many colours.
- Powder coated, very stable steel frame.
- 2 side brackets for fixation of stabilization belts and elastic bands.
- Traction support sleeves.
- Personal Authorization Safety System with 2 safety magnetic keys.
- HalloTronic® System for electric high/low height adjustment from 47 to 95 cm with a lifting capacity up to 225 kg.
- Powder coated steel high/low height adjustment foot bar accessible from each side of the table.
- Rubber feet with 1 cm height adjustment allowing for the levelling of the table.
- Two ways of frame painting: ,,white" or ,,twintone".

Box dimensions: **220 x 85 x 75 cm** Weight: **+50 kg**

Length: **202 cm** | Height: **47-95 cm** | Width: **69 cm** | Weight: **80/95 kg** | Max load*: **225 kg**

TERAPEUTA SCM-3-MED INMED

FEATURES

- 3-section massage table.
- Adjustable head section from -70° to +40° with a gas spring.
- Face hole in the head section with 2 removable face hole covers (round, crescent).
- Adjustable leg section from -10° to 80° with 2 gas springs.
- Release handle of the gas spring system in the leg section accessible from both sides of the table.
- Two-layer padding with upholstery in many colours.
- Powder coated, very stable steel frame.
- Traction support sleeves.
- Personal Authorization Safety System with 2 safety magnetic keys.
- HalloTronic® System for electric high/low height adjustment from 47 to 95 cm with a lifting capacity up to 225 kg.
- Powder coated steel high/low height adjustment foot bar accessible from each side of the table.
- Rubber feet with 1 cm height adjustment allowing for the levelling of the table.
- Two ways of frame painting: ,,white" or ,,twintone".

Box dimensions: **220 x 85 x 75 cm** Weight: **+50 kg**

Length: **205 cm** | Height: **47-95 cm** | Width: **69 cm** | Weight: **85/100 kg** | Max load*: **225 kg**

TERAPEUTA SCM-4-MED INMED

FEATURES

- 4-section massage table.
- Adjustable head section from -70° to +40° with a gas spring.
- Face hole in the head section with 2 removable face hole covers (round, crescent).
- Innovative self-locking fold-down armrests in head section (one hand operated) - SmartS4Arms (Smart Slide For Arms).
- Two-layer padding with upholstery in many colours.
- Powder coated, very stable steel frame.
- 2 side brackets for the fixation of stabilization belts and elastic bands.
- Traction support sleeves.
- Personal Authorization Safety System with 2 magnetic safety keys.
- HalloTronic® System for electric high/low height adjustment from 47 to 95 cm with a lifting capacity up to 225 kg.
- Powder coated steel high/low height adjustment foot bar accessible from each side of the table.
- Rubber feet with 1 cm height adjustment allowing for the levelling of the table.
- Two ways of frame painting: ,,white'' or ,,twintone''

2 ways of frame painting

Box dimensions: **220 x 85 x 75 cm** Weight: **+50 kg**

Length: **202 cm** | Height: **47-95 cm** | Width: **69 cm** | Weight: **87/102 kg** | Max load*: **225 kg**

THERASPACE X4.F4-MED

FEATURES

- 4-section massage table.
- High-quality, soft and pleasant to the touch polyurethane upholstery.
- Two-layer padding (3 cm foam 90 kg/cm3 + 1 cm foam 43 kg/cm3).
- Stitched upholstery.
- Round breathing hole in head section with 2 types of plugs (crescent, round).
- Adjusting the angle of the head section with a gas spring (from -65 to 30°).
- Head + backrest section adjustment angle: +80°.
- Seat section adjustment angle: +20°.
- Leg section adjustment angle: -10°/+45°.
- Total length of the table 205 cm.
- Maximum safe load of the table when raising-lowering the table ≤ 200 kg.
- Maximum safe working load of the table ≤ 275 kg.
- Safe electric actuator against crushing.
- F4 wheel system consisting of 4 liftable casters with a central locking mechanism and 4 rubber feet.
- High/low height adjustment foot bar (49-95 cm).
- A frame combining wood and steel.
- Wireless remote control with three programmable positions (option).
- Electric adjustment of: head + backrest, seat + leg sections via control switches.
- Protection against accidental start-up.
- Linak actuator.

Box dimensions: **220 x 85 x 80 cm** Weight: **+50 kg**

Length: **205 cm** | Height: **49-95 cm** | Width: **67 cm** | Weight: **110 kg** | Load:* **200 kg**

TERAPEUTA SSM-5-MED INMED

FEATURES

- 5-section massage table.
- Adjustable head section from -70° to +40° with a gas spring.
- Face hole in the head section with 2 removable face hole covers (round, crescent).
- Innovative self-locking fold-down armrests in head section (one hand operated) - SmartS4Arms (Smart Slide For Arms).
- Adjustable leg section from -10° to 80° with 2 gas springs.
- Release handle of the gas spring system in the leg section accessible from both sides of the table.
- Two-layer padding with upholstery in many colours.
- Powder coated, very stable steel frame.
- Traction support sleeves.
- Personal Authorization Safety System with 2 magnetic safety keys.
- HalloTronic® System for electric high/low height adjustment from 47 to 95 cm with a lifting capacity up to 225 kg.
- Powder coated steel high/low height adjustment foot bar accessible from each side of the table.
- Rubber feet with 1 cm height adjustment allowing for the levelling of the table.
- Two ways of frame painting: ,,white'' or ,,twintone'

Box dimensions: **220 x 85 x 75 cm** Weight: **+50 kg**

Length: **205 cm** | Height: **47-95 cm** | Width: **69 cm** | Weight: **92/107 kg** | Max load*: **225 kg**

THERASPACE M-S4.F4-MED

FEATURES

- 4-section massage table.
- High-quality, soft and pleasant to the touch polyurethane upholstery.
- Two-layer padding (2 cm foam 40 kg/cm3 + 2 cm foam 44 kg/cm3).
- Stretched upholstery.
- Round breathing hole in head section with 2 types of plugs (crescent, round).
- Adjusting the angle of the head section with a gas spring (from -70 to 40°).
- Total length of the bed 203 cm.
- Maximum safe load of the table when raising-lowering the table ≤ 200 kg.
- Maximum safe working load of the table ≤ 275 kg.
- Safe electric actuator against crushing.
- High/low height adjustment foot bar (47-95 cm).
- 2 side brackets for fixation of stabilization belts.
- 2 traction support sleeves.
- F4 wheel system consisting of 4 liftable casters with a central locking mechanism and 4 rubber feet.
- A frame combining wood and steel.
- Protection against accidental start-up.
- Linak actuator.
- One-handed adjustment of armrest - SmartS4Arms

High/low height adjustment foot bar

Box dimensions: **220 x 85 x 80 cm** Weight: **+50 kg**

Length: **203 cm** | Height: **47-95 cm** | Width: **69 cm** | Weight: **115 kg** | Load*: **200 kg**

THERASPACE X8.F4-MED

FEATURES

- 8-section massage table.
- The ability to adjust the armrests with one hand - SmartS4Arms.
- Swiveling sides in the backrest section.
- High-quality, soft and pleasant to the touch polyurethane upholstery.
- Two-layer padding (3 cm foam 90 kg/cm3 + 1 cm foam 43 kg/cm3).
- Stitched upholstery.
- Round breathing hole in head section with 2 types of plugs (crescent, round).
- Adjusting the angle of the head section with a gas spring (from -65 to 30°).
- Head + backrest section adjustment angle: +80°.
- Seat section adjustment angle: +20°.
- Leg section adjustment angle: -10°/+45°.
- Total length of the table 205 cm.
- Maximum safe load of the table when raising-lowering the table ≤ 200 kg.
- Maximum safe working load of the table ≤ 275 kg.
- Safe electric actuator against crushing.
- F4 wheel system consisting of 4 liftable casters with a central locking mechanism and 4 rubber feet.
- High/low height adjustment foot bar (49-95 cm).
- A frame combining wood and steel.
- Wireless remote control with three programmable positions (option).
- Electric adjustment of: head + backrest, seat + leg sections via control switches.
- Protection against accidental start-up.
- Linak actuator.

Box dimensions: **220 x 85 x 80 cm** Weight: **+50 kg**

Length: **205 cm** | Height: **49-95 cm** | Width: **67 cm** | Weight: **110 kg** | Load*: **200 kg**

THERASPACE Z3.F4-MED

FEATURES

- 3-section massage table.
- High-quality, soft and pleasant to the touch polyurethane upholstery.
- Two-layer padding (3 cm foam 90 kg/cm3 + 1 cm foam 43 kg/cm3).
- Stitched upholstery.
- Round breathing hole in head section with 2 types of plugs (crescent, round).
- Adjusting the angle of the head section with a gas spring (from -65 to 30º).
- Middle section adjustment angle: -20º (Pivot adjustment).
- Head + middle section adjustment angle: +80º.
- Leg section adjustment angle: +8º.
- Total length of the table 205 cm.
- Maximum safe load of the table when raising-lowering the table ≤ 200 kg.
- Maximum safe working load of the table ≤ 275 kg.
- Safe electric actuator against crushing.
- High/low height adjustment foot bar (49-95 cm).
- F4 wheel system consisting of 4 liftable casters with a central locking mechanism and 4 rubber feet.
- A frame combining wood and steel.
- Wireless remote control with three programmable positions (option).
- Electric adjustment of: head + middle, middle + leg sections via control switches.
- Protection against accidental start-up.
- Linak actuator.

Box dimensions: **220 x 85 x 80 cm** Weight: **+50 kg**

Length: **205 cm** | Height: **49-95 cm** | Width: **67 cm** | Weight: **110 kg** | Load*: **200 kg**

THERASPACE Z7.F4-MED

FEATURES

- 5-section massage table.
- The ability to adjust the armrest with one hand - SmartS4Arms.
- High-quality, soft and pleasant to the touch polyurethane upholstery.
- Two-layer padding (3 cm foam 90 kg/cm3 + 1 cm foam 43 kg/cm3).
- Stitched upholstery.
- Round breathing hole in head section with 2 types of plugs (crescent, round).
- Adjusting the angle of the head section with a gas spring (from -65 to 30°).
- Middle section adjustment angle: -20° (Pivot adjustment).
- Head + middle section adjustment angle: +80°.
- Leg section adjustment angle: +8°.
- Total length of the table 205 cm.
- Maximum safe load of the table when raising-lowering the table ≤ 200 kg.
- Maximum safe working load of the table ≤ 275 kg.
- Safe electric actuator against crushing.
- High/low height adjustment foot bar (49-95 cm).
- F4 wheel system consisting of 4 liftable casters with a central locking mechanism and 4 rubber feet.
- A frame combining wood and steel.
- Wireless remote control with three programmable positions (option).
- Electric adjustment of: head + middle, middle + leg sections via control switches.
- Protection against accidental start-up.
- Linak actuator.

Box dimensions: **220 x 85 x 80 cm** Weight: **+50 kg**

Length: **205 cm** | Height: **49-95 cm** | Width: **67 cm** | Weight: **110 kg** | Load*: **200 kg**

THERASPACE Z7.F4-MED

FEATURES

- 7-section massage table.
- The ability to adjust the armrest with one hand - SmartS4Arms.
- Swiveling sides in the middle section.
- High-quality, soft and pleasant to the touch polyurethane upholstery.
- Two-layer padding (3 cm foam 90 kg/cm3 + 1 cm foam 43 kg/cm3).
- Stitched upholstery.
- Round breathing hole in head section with 2 types of plugs (crescent, round).
- Adjusting the angle of the head section with a gas spring (from -65 to 30°).
- Middle section adjustment angle: -20° (Pivot adjustment).
- Head + middle section adjustment angle: +80°.
- Leg section adjustment angle: +8°.
- Total length of the table 205 cm.
- Maximum safe load of the table when raising-lowering the table ≤ 200 kg.
- Maximum safe working load of the table ≤ 275 kg.
- Safe electric actuator against crushing.
- High/low height adjustment foot bar (49-95 cm).
- F4 wheel system consisting of 4 liftable casters with a central locking mechanism and 4 rubber feet.
- A frame combining wood and steel.
- Wireless remote control with three programmable positions (option).
- Electric adjustment of: head + middle, middle + leg sections via control switches.
- Protection against accidental start-up.
- Linak actuator.

Box dimensions: **220 x 85 x 80 cm** Weight: **+50 kg**

Length: **205 cm**

Height: **49-95 cm**

Width: **67 cm**

Weight: **110 kg**

Load*: **200 kg**

TOILETING SLING-MED

MODEL: 25080

Toileting sling, polyester (loops), max. 300 Kg (swl)

✪ SPECIFICATIONS

Model	Size	A	B	C
25080 - M 03-HCA-HCA-0094	Medium	48 cm	90 cm	33 cm
25080 - L 03-HCA-HCA-0004	Large	49 cm	97 cm	33 cm
25080 - XL 03-HCA-HCA-0095	Extra Large	56 cm	100 cm	38 cm

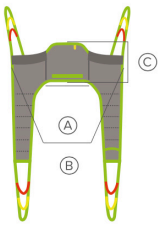

MODEL: 25090

Toileting Sling High Net, polyester net (loops), max. 300 kg (SWL)

✪ SPECIFICATIONS

Model	Size	A	B	C
25090 - M 03-HCA-HCA-0047	Medium	48 cm	92 cm	83 cm
25090 - L 03-HCA-HCA-0005	Large	49 cm	99 cm	90 cm
25090 - XL 03-HCA-HCA-0096	Extra Large	56 cm	101 cm	100 cm

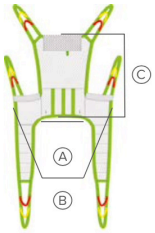

MODEL: 25090C

Toileting Sling High E-clip Net (clips), max. 250 kg (SWL)

✪ SPECIFICATIONS

Model	Size	A	B	C
25090C - M 03-HCA-HCA-0076	Medium	48 cm	90 cm	76 cm
25090C - L 03-HCA-HCA-0069	Large	50 cm	98 cm	81 cm
25090C - XL 03-HCA-HCA-0077	Extra Large	56 cm	101 cm	94 cm

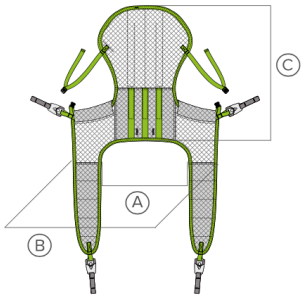

UNIVERSAL BASIC MESH SLING-MED

The sling is intended for people who had good control about head position and no need additional support around the head. It provides very good support around the thighs and upper body, giving the user a sense of comfort and safety. It is used for transfers from a sitting or lying position. For people with no torso stability. The sling made of polyester mesh, suitable for bathing.

SPECIFICATIONS

Model	Size	Y	Z
009-09815 Universal Basic Mesh M 03-WCR-WCR-0069	Medium	48 cm	66 cm
009-09816 Universal Basic Mesh L 03-WCR-EGL-0028	Large	52 cm	75 cm
009-09817 Universal Basic Mesh XL 03-WCR-WCR-0070	Extra Large	68 cm	75 cm

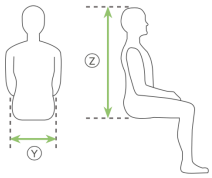

UNIVERSAL BASIC SLING-MED

The sling is designed for people who need additional support around the head, with no or poor stability of the torso, head and neck. The sling provides very good support around the thighs and upper body, giving the user a sense of comfort and safety. It is used for transfers from a sitting or lying position.

SPECIFICATIONS

Model	Size	Y	Z
009-09825 Universal Basic HS M 03-WCR-WCR-0005	Medium	48 cm	91 cm
009-09826 Universal Basic HS L 03-WCR-WCR-0006	Large	52 cm	100 cm
009-09827 Universal Basic HS XL 03-WCR-WCR-0020	Extra Large	68 cm	100 cm

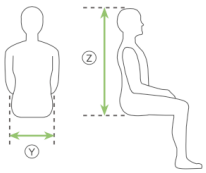

ZEPU-DK1-2

ELECTRIC REHABILITATION TABLE SERIES

ZEPU-DK1

ZEPU-DK2

ZEPU-DK1	ZEPU-DK2
Outline Dimension(mm): 2050×920X(940-2280) (LxWxH)	Outline Dimension(mm): 2050×920X(940-2280) (LxWxH)
Weight:120kgs	Weight: 155kgs

✪ FEATURES

- New functions: standing function and waist flexion&extension function.
- Double values: nursing and rehabilitation.
- Provides the patients with standing training during early stage.
- Set range of flexion and extension and walking speed, according to training target.
- Offers the long-term bedridden daily standing and leg joint motion training.

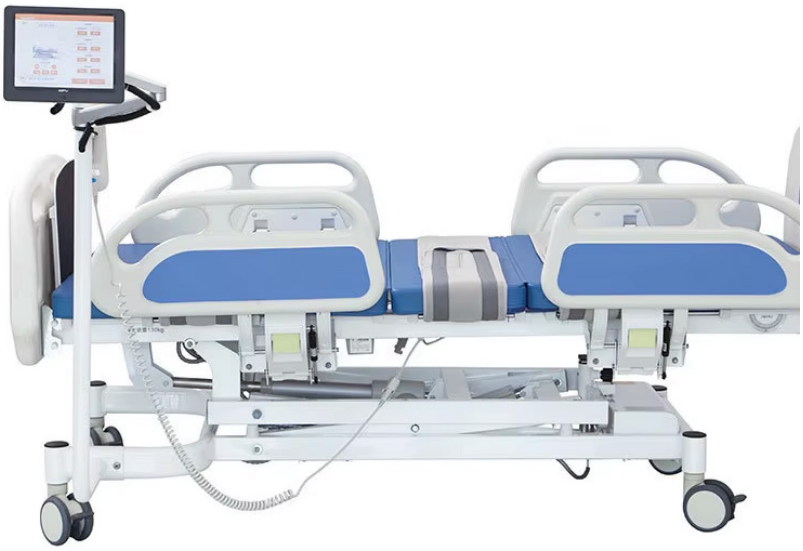

ZEPU-DQ1-2

ELECTRIC TILT TABLE

ZEPU-DQ1

ZEPU-DQ2

ZEPU-DQ1	ZEPU-DQ2
Size (mm): 2080×885x(1000-2230) (LxWxH)	Size (mm): 2080×885x(1000-2230) (LxWxH)
Weight: 89kgs	Weight: 93kgs

✪ FEATURES

- Provide the position of stable transfer training.
- The lifting angle of accurate setting.
- Do exercise training of dorsiflexion, inversion and ectropion of ankle joint.
- Promote the recovery of lower limb load-bearing.

ZEPU-PTC2-3

PT EXERCISE TABLE

ZEPU-PTC2

ZEPU-PTC3

✪ FEATURES

- Different height is controlled by the manual electric switch.
- Easy to fix and move the table through retractable casters.
- Backrest of ZP-PTC-3 could be set from 0~75°.
- The table of ZP-PTC-3 is designed to two sections.

ZEPU-PTC2	ZEPU-PTC3
Size (mm): 1900×1230×(400-800)(L×W×H)	Size (mm): 2080 ×1200×(400-800) (L×W×H)
Weight: 100kgs	Weight: 100kgs

ZEPU-TQ10-20-30

ELECTRIC TRACTION BED

FEATURES

- Ergonomic strap design.
- Optional heated mattress.
- Intelligent traction rope operation and control technology, traction rope retracting more freely.
- Built-in anti-overdraw program and external emergency stop control, offering double protections
- Multiple traction treatment modes: intermittent traction, progressive traction, intermittent traction, cyclic progressive mode, custom mode.

ZEPU-TQ10
Tractor size (mm): 580x310x740(LxWxH)
Weight:55kgs

ZEPU-TQ20
Size (mm): 580x310x740(LxWxH)
Weight:55kgs

ZEPU-TQ30
Size(mm)-Main frame: 410 x 200x 480(LxWxH)
Size(mm)-Bed: 1800 x1000 x (680-1050) (LxWxH)
Weight:137kgs

ZEPU-TWC-3-4-5-6-7-8-9

MULTI-POSITION MEDICAL TREATMENT BED

ZEPU-TWC-3

ZEPU-TWC-4

ZEPU-TWC-5

ZEPU-TWC-6

ZEPU-TWC-7

ZEPU-TWC-8

ZEPU-TWC-9

✪ FEATURES

- The table is divided into several sections and each section is adjusted in different angles.
- Have a good effect on the cervical, thoracic and lumbar diseases.
- Easy for therapist to do rehab exercise on the different positions of patients.
- Height of each section of table is adjustable.

ZEPU-TWC
Size (mm): 2165×730×(485-945) (L×W×H)
Weight: 125kgs

WHY CHOOSE IPEx HEALTHCARE?

- Complete Rehabilitation Solutions
- Internationally Recognized Manufacturers
- Clinical Training & Technical Support
- Preventive Maintenance & After-sales Service
- Equipment Supply, Installation & Commissioning
- Nationwide Sales & Technical Coverage

IPEX HEALTHCARE

...all for Health and Care...

Postal Address:
IPEX Healthcare Limited,
P. O. Box 42502, Dar Es Salaam, Tanzania.

Physical Address:
Plot No. 08, Bahati Street, Temeke Area,
Dar es Salaam, Tanzania
Tel: +255 712 897 082 / +255 745 226 582
Email: info@ipex.co.tz **Web:** www.ipex.co.tz